# WSU GOLF TEAM CLUBHOUSE UPGRADE EXTERIOR & ADDITION

## WASHINGTON STATE UNIVERSITY
## PULLMAN, WA 99163

## DESIGN TEAM

### OWNER
WASHINGTON STATE UNIVERSITY
PO BOX 641150
2425 EAST GRIMES WAY,
PULLMAN, WASHINGTON 99164-1150
TEL: (509) 335-9024
CONTACT:
JASON BAERLOCHER

### ARCHITECTURAL
DESIGN WEST ARCHITECTS P.A.
254 EAST MAIN STREET
PULLMAN, WASHINGTON 99163
TEL: (509) 332-3113
CONTACT:
NED WARNICK

### CIVIL
SYNTIER ENGINEERING
405 BRELSFORD DR STE C
PULLMAN, WASHINGTON 99163
TEL: (509) 339-6187
CONTACT:
TOM STERLING

### STRUCTURAL
LSB CONSULTING ENGINEERS
523 E. THIRD AVENUE
SPOKANE, WASHINGTON 99202
TEL: (509) 323-9292
FAX: (509) 747-7115
CONTACT:
LARRY HARRIS

### MECHANICAL
MSI ENGINEERS
LEGION BUILDING
108 N. WASHINGTON, SUITE 505
SPOKANE, WASHINGTON 99201
TEL: (509) 624-1050
CONTACT:
AARON DONNELLY

### ELECTRICAL
MSI ENGINEERS
LEGION BUILDING
108 N. WASHINGTON, SUITE 505
SPOKANE, WASHINGTON 99201
TEL: (509) 624-1050
CONTACT:
BEN JENNINGS

## SYMBOLS

| | | |
|---|---|---|
| BUILDING SECTION | A1 / A5.00 | |
| WALL SECTION | A1 / A5.02 | |
| DETAIL | A1 / A8.00 — A1 / A8.00 | |
| ELEVATION MARK | 100'-0" T.O. FLOOR | |
| REVISIONS | 1 | |
| WINDOW TYPES | 01 | SEE SHEET A6.00 |
| FLOOR & WALL ASSEMBLIES | S06.0B | SEE SHEET A8.00 |
| ROOF ASSEMBLIES | S06.0B | SEE SHEET A8.01 |
| DOOR NUMBER | 01 | |
| EXTERIOR ELEVATION | A1/A4.00 | |
| INTERIOR ELEVATION | A1/A7.10 | |

## VICINITY MAP

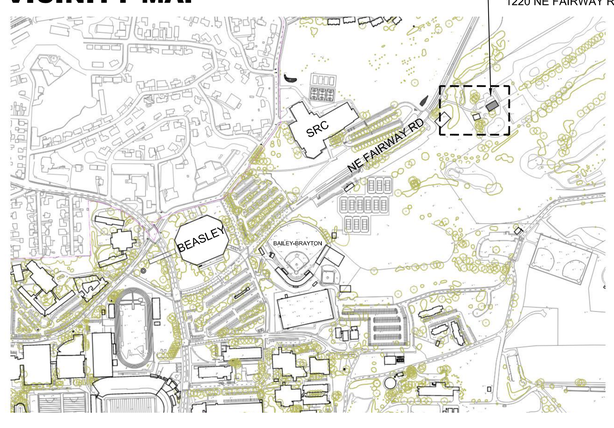


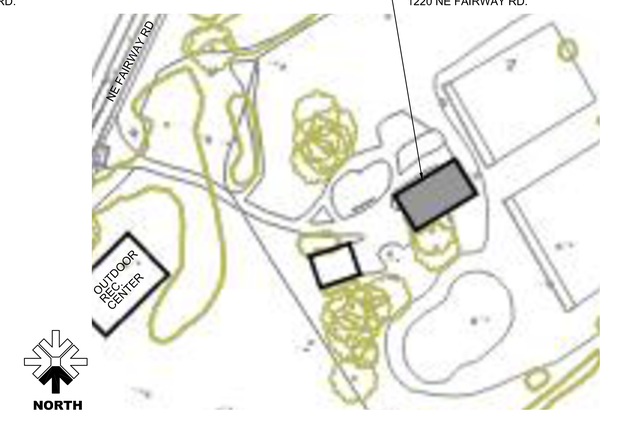


## GENERAL NOTES

CONTRACTOR TO VERIFY WITH UTILITIES EXACT LOCATION OF EXISTING UNDERGROUND SERVICES. CONTACT CALL BEFORE YOU DIG AT: 811

1. CONTRACTOR SHALL COORDINATE EFFORTS FOR DESIGN BUILD MECHANICAL, ELECTRICAL, AND PLUMBING SYSTEMS. ALL WORK SHALL COMPLY WITH THE REQUIREMENTS OF THESE DRAWINGS, THE SPECIFICATIONS, AND THE CURRENT EDITIONS OF THE IBC, UMC, UPC, NEC AND THE WASHINGTON STATE ENERGY CODE, AND ALL CITY OF PULLMAN REGULATIONS. CONTRACTOR SHALL BE RESPONSIBLE FOR OBTAINING ALL REQUIRED PERMITS AND PROVIDING ALL REQUIRED DOCUMENTATION FOR ISSUANCE OF PERMITS, INCLUDING ANY AND ALL ENGINEERING, STAMPED AND SIGNED BY REGISTERED PROFESSIONAL ENGINEERS IN THE STATE OF WASHINGTON APPROPRIATE TO THE DISCIPLINE.

2. THE CONTRACTOR AGREES TO ASSUME SAFE AND COMPLETE RESPONSIBILITY FOR THE JOB SITE DURING THE COURSE OF THE PROJECT, INCLUDING THE SAFETY OF ALL PERSONS AND PROPERTY, THAT THIS REQUIREMENT SHALL APPLY CONTINUOUSLY AND NOT BE LIMITED TO NORMAL WORKING HOURS, AND THAT THE CONTRACTOR SHALL DEFEND, INDEMNIFY AND HOLD THE ARCHITECT AND OWNER HARMLESS FROM ANY AND ALL LIABILITY, REAL OR ALLEGED, IN CONNECTION WITH THE PERFORMANCE OF WORK ON THIS PROJECT, EXCEPTING FOR LIABILITY ARISING FROM THE SOLE NEGLIGENCE OF THE OWNER OR ARCHITECT, OR THIRD PARTY IN VIOLATION OF THE LAW OR IN TRESPASS. THE CONTRACTOR SHALL PRACTICE SAFETY AT ALL TIMES AND SHALL FURNISH, ERECT, AND MAINTAIN SUCH FENCES, BARRICADES, LIGHTS, AND SIGNS NECESSARY TO GIVE ADEQUATE PROTECTION TO THE PUBLIC AT ALL TIMES. THE ARCHITECT MAKES NO WARRANTY THAT THE CONSTRUCTION-PHASE FENCES, ETC., ARE ADEQUATE TO ENSURE SAFETY DURING CONSTRUCTION OPERATIONS.

3. PLAN INTENT: THESE DRAWINGS REPRESENT EXISTING CONDITIONS (CONTRACTOR TO VERIFY ALL ACTUAL CONDITIONS), AND THE FINISHED FACILITIES AND UNLESS OTHERWISE INDICATED, THEY DO NOT SHOW THE METHOD OF CONSTRUCTION. THE CONTRACTOR SHALL PROVIDE ALL MEASURES NECESSARY TO PRODUCE THE FINISHED FACILITIES AND TO PROTECT THE WORK AND PROPERTY, THE SAFETY OF THE WORKERS, AND OTHER PERSONS DURING CONSTRUCTION. THE CONTRACTOR IS SOLELY RESPONSIBLE FOR THE ABOVE MEASURES AND VISITS TO THE SITE BY THE ARCHITECT SHALL NOT INCLUDE OBSERVATION OF SAFETY MEASURES.

4. FIELD VERIFY ALL BUILDING POINTS OF CONNECTIONS AND FLOOR TO FLOOR HEIGHTS. NEW BUILDING TO MATCH FLOOR HEIGHTS OF EXISTING BUILDING.

## DRAWING INDEX


| | |
|---|---|
| GENERAL: | |
| COVER SHEET | G1.00 |
| CODE PLAN | G1.01 |
| CIVIL | |
| COVERSHEET | C1 |
| UTILITY PLAN | C2 |
| DETAIL 1 | C3 |
| ARCHITECTURAL: | |
| FLOOR PLAN | A3.30 |
| REFLECTED CEILING PLAN | A3.50 |
| ROOF PLAN | A3.60 |
| EXTERIOR ELEVATIONS | A5.00 |
| SECTIONS | A5.01 |
| WALL SECTIONS | A5.10 |
| DOOR AND WINDOW TYPES | A6.00 |
| INTERIOR ELEVATIONS | A7.10 |
| ASSEMBLIES AND DETAILS | A8.00 |
| ASSEMBLIES AND DETAILS | A8.01 |
| STRUCTURAL | |
| GENERAL STRUCT NOTES | S1.01 |
| INSPECTION,ABBREVS. & LEGEND | S1.02 |
| TYPICAL CONCRETE DETAILS | S1.03 |
| TYPICAL MASONRY DETAILS | S1.04 |
| TYPICAL WOOD DETAILS | S1.05 |
| FOUNDATION & FRAMING PLANS | S2.01 |
| STRUCT DETAILS | S3.01 |
| STRUCT DETAILS | S3.02 |
| MECHANICAL: | |
| NOTES, LEGENDS, AND ABREV | M0.01 |
| MECHANICAL EQUIPMENT SCHEDULES | M1.01 |
| FLOOR PLAN HVAC | M3.30 |
| PLUMBING: | |
| NOTES, LEGENDS, AND ABREV | P0.01 |
| PLUMBING SCHEDULES | P1.01 |
| FOUNDATION PLUMBING | P3.30 |
| FIRST FLOOR PLUMBING | P3.31 |
| PLUMBING DETAILS | P4.01 |
| ELECTRICAL: | |
| LEGENDS & ABREV | E1.00 |
| FIRST FLOOR POWER | E2.00 |
| FIRST FLOOR LIGHTING | E3.00 |
| SINGLE LINE AND SCHEDULES | E4.00 |
| DETAILS & LIGHTING COMPLIANCE | E4.01 |



DESIGN WEST ARCHITECTS, P.A.
• MERIDIAN, IDAHO • PULLMAN, WASHINGTON •
• KENNEWICK, WASHINGTON • ONTARIO, OREGON •
www.designwestpa.com



© COPYRIGHT DESIGN WEST ARCHITECTS P.A. DESIGN CONCEPTS AND DRAWINGS NOT TO BE REUSED WITHOUT WRITTEN PERMISSION OF ARCHITECT


DRAWN BY
SG

CHECKED BY
NW

JOB NUMBER
22103

REVISIONS

REGISTERED ARCHITECT
STATE OF WASHINGTON
01/26/24

WSU GOLF TEAM
CLUBHOUSE UPGRADE
EXTERIOR & BLDG ADDITION
WASHINGTON STATE UNIVERSTIY
PULLMAN, WA 99163

DATE
1/26/2024

SHEET NAME
COVER SHEET

SHEET
G1.00


Sam Gregg 1/26/2024 3:44:03 PM

**WASHINGTON UNIVERSITY GOLF PRACTICE FACILITY - ADDITION**
**Building Code Summary**

**Authorities having Jurisdiction:**

**City of Pullman** — Jeromy Moore, Building Official
190 SE Crestview Street — jeromy.moore@pullman-wa.gov
Pullman, WA 99163

**Building Code:**
Applicable Requirements:
International Building Code 2018 Edition, with WAC amendments
International Existing Building Code 2018 Edition, with WAC amendments
Washington State Energy Code - 2018 Edition,
ANSI A117.1-2009 - Accessible and Usable Buildings and Facilities

2018 Uniform Plumbing Code
2020 National Electric Code
2018 International Mechanical Code

Existing Building: 3,556 square feet main level practice facility

New Addition: 375 square feet entry, storage room, restroom

Construction type: V- B (existing construction)
V - B (new construction)

Occupancy class: A-3 (existing and new construction)

**Commentary ONE- IEBC Compliance:**
The work of this project is considered under the requirements of the International Existing Building Code, 2018 edition (IEBC). The project is defined as an addition by the IEBC. The new construction work shall comply with Chapter 11 of the IEBC and the applicable portions of the 2018 IBC..

In summary:

- Section 1101.3 - The minor amount of work in the adjacent existing space shall comply with Chapter 6, and the prescriptive requirements of the IEBC.
- Section 1102 - The addition is within the allowable heights, areas, and allowance for non-fire protected building.
- Section 1103 - The addition is structurally independent of the existing structure.
- Sections 1104 through 1106 - are not applicable to this project.
- **Section** 1107 - The addition on this project shall comply with the energy code.

**Commentary TWO - IBC Compliance Chapter 5**
The existing building and new addition result in the aggregate building area and the heights of the building are within the limitations specified in Sections 504 and 506.

In summary:

- Section 504.3 - The project is less than 40' in height.
- Section 504.4 - The project is one story.
- Section 506.2 - Allowable Area Factor : Aa = 6,000 allowable where total project area is 3,931 SF.
-

**Commentary THREE- Energy Code Compliance:**
All new construction shall comply with energy code requirements by way of the prescriptive requirements defined by WSEC. Reference WSEC compliance worksheet below.

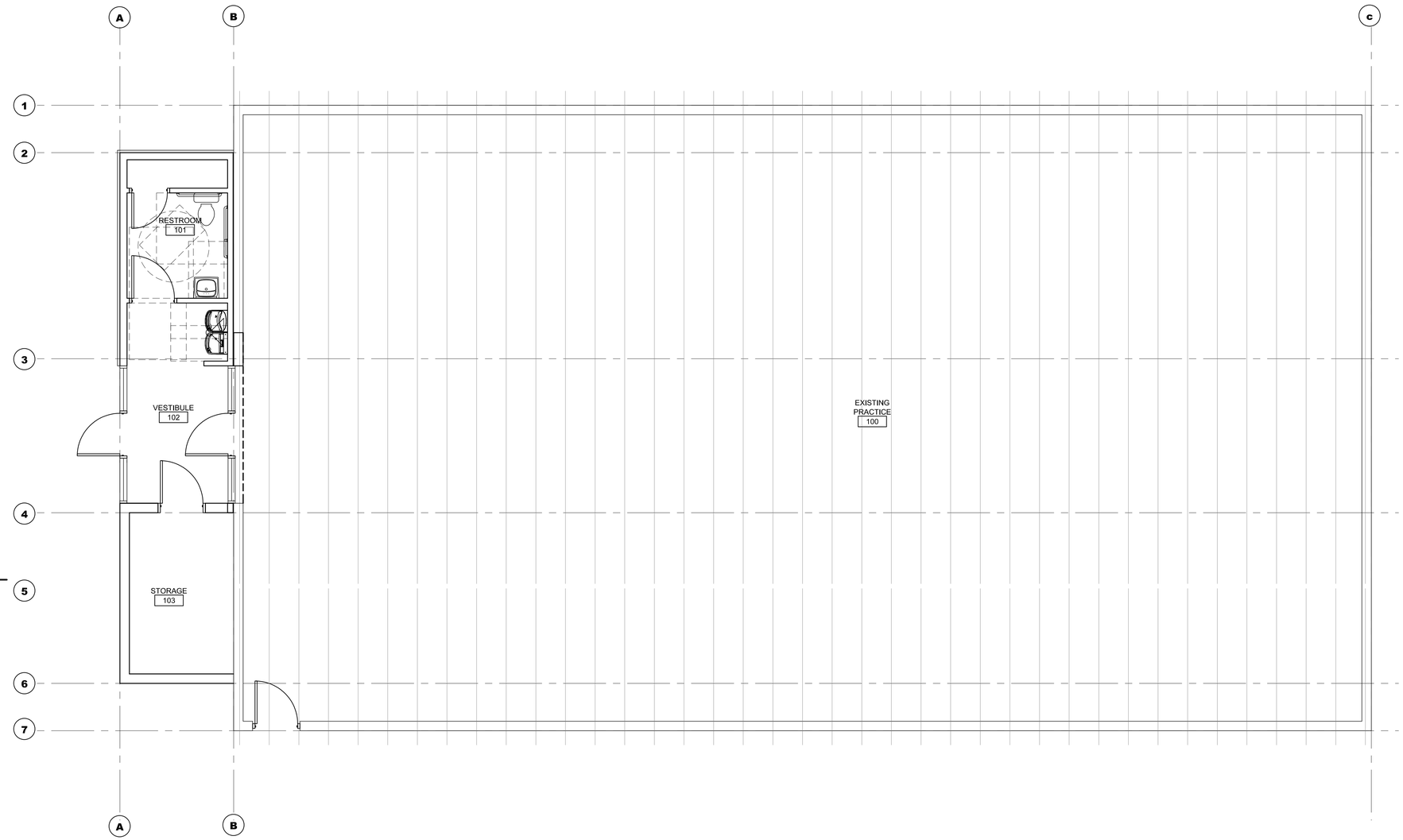


12/19/23, 10:49 AM waenergycodes.com/print_project_summary_form.php?k=Y29lYm6lGZZX3B0PXNjY19mdWxaeVljb25kaXRpb25ZCU3Q3BkX2FkZGdaWlluJnRmdj1zY2NfZnVsbHlfY29uZG...

**ENVELOPE COMPLIANCE SUMMARY**

2018 WSEC Compliance Forms for Commercial Buildings including Group R2, R3 & R4 over 3 stories and all R1 — Administered by: ©2023 NEEA, All rights reserved

| | | | |
|---|---|---|---|
| **Project & Applicant Information** | **Project Title** | WSU Golf Team Practice Facility Upgrades - 2018 WSEC | For Building Department Use: **Date: Dec 19, 2023** |
| | **Project Address** | 1320 NE Fairway Rd. Pullman, WA 99163 | |
| | **Applicant Name** | SAM GREGG | |
| | **Applicant Phone** | 509-332-3113 | |
| | **Applicant Email** | sgregg@designwestpa.com | |

For questions about this report, contact WSEC Commercial Technical Support at 360-539-5300 or via email at com.techsupport@waenergycodes.com

| | | | | | |
|---|---|---|---|---|---|
| **General Occupancy** | All Commercial | **General Building Use Type(s)** | Entmt/Assembly, Sports/Culture/ Club | **Building Cond. Floor Area** | 3,616 |
| **Project Scope** | Building Addition | **Space Conditioning Categories** | Fully Conditioned | **Project Cond. Floor Area** | 260 |
| | | | | **Floors Above Grade** | 1 |
| | | | | **Compliance Method** | Compliance Method 1 - General |
| **Envelope Project Description** | 260 square foot addition | | | | |

| **Envelope Compliance Path and Method** | **Scope** | **Space Conditioning Category** | **Compliance Method** | **WWR/SKR per Category** | **UA Calculation Adjustment** | **Fenestration Alternates** | **Compliance Verification** |
|---|---|---|---|---|---|---|---|
| | Building Addition | Fully Conditioned | Prescriptive | 24.81% / 0% | None selected | No alternates selected | **COMPLIES** |

| | | | |
|---|---|---|---|
| **Air Barrier Testing** | Air barrier testing included in project scope | **Air Barrier Comments** | |

| **Project Title** | **WSU Golf Team Practice Facility Upgrades - 2018 WSEC** | | | **Date** | **Dec 19, 2023** |
|---|---|---|---|---|---|
| **Scope & Space Conditioning** | **BUILDING ADDITION - FULLY CONDITIONED** | | | **Compliance Verification** | **COMPLIES** |
| **Window-to-wall Ratio** | 24.81% | **Skylight-to-roof ratio** | 0% | **Vertical Fenestration Alternate** | No alternates selected |

**Opaque Envelope Assemblies**

| **Roof/Ceiling** | **Location in Documents** | **Assembly ID** | **Assembly Location** | **Cavity** | **Insulation R-Values Continuous (% penetration)** | **2nd Layer (MB Roof)** | **U-Factor** | **Net Area (SF)** |
|---|---|---|---|---|---|---|---|---|
| Insulation entirely above deck | ET/AS/01, EW/AS/01 | xx.xxx | Exterior | | R-38 (+ 0.0PI%) | | | 512 |
| | U-Factor Source: | | | U-Factor Source Description: | | | | |
| | Is this assembly exterior or interior?: Exterior | | | | | | | |
| **Walls** | **Location in Documents** | **Assembly ID** | **Assembly Location** | **Cavity** | **Continuous (% penetration)** | **Insulated Wall Furring** | **U-Factor** | **Net Area (SF)** |
| Wood-framed and other - Commercial | CN/AS/01 | xx.xx | Exterior | R-21 | R-4 (+ 0.0PI%) | | | 282 |
| | Which insulation code target does wall comply with?: R-21 Cavity + Intermediate Framing | | | U-Factor Source: | | | | |
| | U-Factor Source Description: | | | Wall Framing Type (Standard, Inter., Advanced): Intermediate | | | | |
| | Framing Depth: 2x6 | | | Framing Spacing: | | | | |
| | Is this assembly exterior or interior?: Exterior | | | | | | | |
| Mass (concrete masonry) - Commercial | ES/AS/01 | x.xxx | Yes | | (< 0.0PI%) | | U-0.104 | 218 |
| | Is CMU wall eligible for wall insulation exception?: Yes | | | Percentage of CMU cores filled with insulation: 50% or more | | | | |
| | Space type enclosed by CMU walls: Warehouse (storage and retail) | | | Framing Spacing: | | | | |
| | U-Factor Source Description: | | | | | | | |
| **Slab-on-grade Floors** | **Location in Documents** | **Assembly ID** | **Assembly Location** | **Slab Edge** | **Under Slab** | | **F-Factor** | **Perimeter Length (SF)** |
| Unheated slab | AU/AS/01 | xx.xx | At grade level | R-10 | | | | 54 |
| | Slab Insulation Method: 2 ft vertical (from top of slab downward) | | | F-Factor Source: | | | | |

12/19/23, 10:49 AM waenergycodes.com/print_project_summary_form.php?k=Y29lYm6lGZZX3B0PXNjY19mdWxaeVljb25kaXRpb25ZCU3Q3BkX2FkZGdaWlluJnRmdj1zY2NfZnVsbHlfY29uZG...

| | | | |
|---|---|---|---|
| | F-Factor Source Description: | | |

**Fenestration & Opaque Door Assemblies**

| **Vertical Fenestration** | **Location in Documents** | **Assembly ID** | **Assembly Location** | **Shading (PF)** | **Insulation R-Values Fenestration SHGC** | **Fenestration U-Factor** | **Rough Opening (SF)** | |
|---|---|---|---|---|---|---|---|---|
| Curtain wall (external non-load bearing wall) | E1/AA/00 | xx.xx | Exterior | | PF < 0.2 | SHGC-0.38 | U-0.30 | 315 |
| | U-Factor & SHGC Source: | | | U-Factor Source Description: | | | | |
| | Is this assembly exterior or interior?: Exterior | | | | | | | |
| All other fenestration types | E1/AA/00 | xx.xxx | Interior partition | | PF < 0.2 | SHGC-0.38 | U-0.30 | 98 |
| | U-Factor & SHGC Source: | | | U-Factor Source Description: | | | | |
| | Is this assembly exterior or interior?: Interior partition | | | | | | | |

DESIGN WEST ARCHITECTS, P.A.
• MERIDIAN, IDAHO • PULLMAN, WASHINGTON •
• KENNEWICK, WASHINGTON • ONTARIO, OREGON •
www.designwestpa.com

© COPYRIGHT DESIGN WEST ARCHITECTS P.A. DESIGN CONCEPTS AND DRAWINGS NOT TO BE REUSED WITHOUT WRITTEN PERMISSION OF ARCHITECT

DRAWN BY
SG

CHECKED BY
NW

JOB NUMBER
22103

REVISIONS

STATE OF WASHINGTON
01/26/24

**WSU GOLF TEAM**
**CLUBHOUSE UPGRADE**
**EXTERIOR & BLDG ADDITION**
**WASHINGTON STATE UNIVERSTIY**
**PULLMAN, WA 99163**

DATE
**1/26/2024**

SHEET NAME
**CODE PLAN**

SHEET
**G1.01**

**A1** **CODE PLAN**
SCALE: $\frac{1}{4}$"=1'

Sam Gregg 1/25/2024 4:29:27 PM

# WSU GOLF COURSE

## INDOOR PRACTICE FACILITY UTILITIES

WASHINGTON STATE UNIVERSITY

Department of Facilities Operations — Pullman, Washington

### LEGEND of SYMBOLS (EXISTING AND PROPOSED)

**EXISTING**

- 2535 — MAJOR CONTOUR
- 2531 — MINOR CONTOUR
- SS — SANITARY SEWER
- SD — STORM
- W — WATER
- AP — AERIAL POWER
- BP — BURIED POWER
- GAS — BURIED GAS
- COMM — COMMUNICATIONS
- CURB ONLY
- CURB AND GUTTER
- EDGE OF ASPHALT
- FENCE
- DRAINAGE DITCH
- CONCRETE
- BUILDING
- GRAVEL SURFACE
- STORM MANHOLE
- C.B. — CATCH BASIN
- RD — ROOF DRAIN
- FLOOR DRAIN
- SANITARY SEWER MANHOLE
- CO — CLEAN OUT
- CV — IRRIG. CONTROL VALVE
- WATER METER
- HOSE BIB/YARD HYDRANT
- W — WATER MANHOLE
- WATER VALVE
- FIRE HYDRANT
- FIRE DEPARTMENT CONNECTION
- END CAP
- PIV — POST INDICATOR VALVE
- POWER/TELEPHONE POLE
- POLE ANCHOR
- P — POWER TRANSFORMER
- POWER TRANSFORMER
- E — ELECTRIC METER
- J — JUNCTION BOX
- G — GAS METER
- BOLLARD
- HANDICAP RAMP
- LIGHT POLE
- SIGN W/BLADES
- MONUMENT SIGN
- 24" — CONIFEROUS TREE W/TRUNK SIZE
- 24" — DECIDUOUS TREE W/TRUNK SIZE
- SHRUB
- BENCH MARK

**PROPOSED**

- SAWCUT
- 2560 — CONTOUR
- CURB
- 8"SD — STORM LINE
- STORM MANHOLE
- CATCH BASIN
- ASPHALT
- GRAVEL
- SIGN
- FG=2557.25 — SPOT EL.
- DRAINAGE FLOW ARROW
- BMP C220 — BMP DESIGNATION PER STORMWATER MANAGEMENT MANUAL FOR EASTERN WASHINGTON

### INDEX of SHEETS


| SHEET NO. | SHEET TITLE |
|---|---|
| C1 | COVER SHEET |
| C2 | UTILITY PLAN |
| C3 | DETAILS |


### LOCATOR MAP — W.S.U. CAMPUS

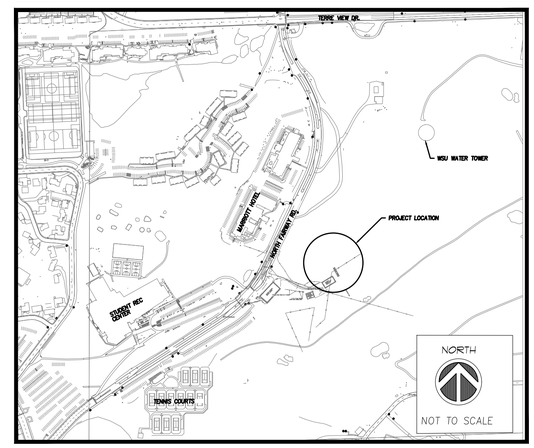


### DEMOLITION NOTES

1. CONTRACTOR TO REVIEW PROJECT LIMITS FOR QUANTITY AND TYPE OF STRUCTURES, GROUND COVER AND DEBRIS AT THE TIME OF BIDDING AND SHALL INCORPORATE REMOVALS/DISPOSAL IN THEIR WORK.
2. CONTRACTOR SHALL OBTAIN ALL CONSTRUCTION APPROVALS/PERMITS FOR THE PROJECT SITE FROM WASHINGTON STATE UNIVERSITY, AND OTHER GOVERNING AGENCIES PRIOR TO ANY CONSTRUCTION ACTIVITY.
3. CONTRACTOR SHALL BE RESPONSIBLE TO REMOVE ANY AND ALL ITEMS NOT OTHERWISE LISTED HEREIN THAT CONFLICT WITH THE CONSTRUCTION OF THE PROJECT. CONTRACTOR SHALL CONTACT PROJECT MANAGER IMMEDIATELY UPON ENCOUNTERING ITEM TO DETERMINE ANY ITEMS NOT SHOWN ON THE PLANS THAT MUST BE REMOVED. FAILURE TO DO SO DOES NOT RELIEVE CONTRACTOR OF COST RESPONSIBILITY FOR REMOVING ITEMS REQUIRED.
4. LOCATION OF ALL UNDERGROUND UTILITIES SHOWN ARE APPROXIMATE AND CONTRACTOR SHALL VERIFY CONNECTION POINTS WITH EXISTING UTILITIES. CONTRACTOR IS RESPONSIBLE FOR ANY DAMAGE CAUSED TO EXISTING UTILITIES AND UTILITY STRUCTURES THAT ARE TO REMAIN. RECORD LINE CAPPING LOCATIONS AND ACCURATE UTILITY LOCATIONS (HORIZONTAL & VERTICAL) WITH DIMENSION STRINGS TO PERMANENT LANDMARKS ON AS-BUILT PLAN FOR WSU.
5. ALL DEMOLISHED ASPHALTIC CONCRETE AND PORTLAND CEMENT CONCRETE SHALL BE REMOVED FROM SITE AND DISPOSED OF IN A LEGAL MANNER PROVIDED BY WSU FACILITIES.
6. THE CONTRACTOR SHALL TAKE EFFECTIVE ACTION TO PREVENT THE FORMATION OF ANY AIRBORNE DUST NUISANCE AND SHALL BE RESPONSIBLE FOR ANY DAMAGE RESULTING FROM FAILURE TO FOLLOW WSU AND CITY OF PULLMAN GUIDELINES. THE CONTRACTOR MUST PUT INTO PLACE MEANS CONFORMING TO BEST MANAGEMENT PRACTICES TO PREVENT SURFACE WATER CONTAMINATION. STORM DRAINS THAT MAY CARRY SEDIMENT AND CONTAMINANTS MUST BE PROTECTED.
7. CONTRACTOR SHALL SUBMIT A WRITTEN HAUL ROAD PLAN FOR THE PROJECT SITE TO PROJECT MANAGER AND OBTAIN APPROVAL FROM THEM PRIOR TO USE. VERIFY ALL OVERHEAD CLEARANCES PRIOR TO COMMENCING WORK.
8. CONTRACTOR SHALL SUBMIT A WRITTEN TRAFFIC CONTROL PLAN FOR THE PROJECT SITE TO PROJECT MANAGER FOR APPROVAL PRIOR TO CONSTRUCTION. THE PLAN SHALL BE IN CONFORMANCE WITH WSU, CITY OF PULLMAN AND MUTCD (MANUAL ON UNIFORM TRAFFIC CONTROL DEVICES) STANDARDS AND SHALL BE MAINTAINED AND AMENDED AS CONDITIONS CHANGE THROUGHOUT CONSTRUCTION.
9. CONTRACTOR SHALL PROVIDE ALL SIGNS AND BARRICADES REQUIRED TO CLOSE PARKING AND ROADWAY AREAS, REDIRECT TRAFFIC AND PEDESTRIANS, AND PROVIDE ADVANCE WARNING AND INSURE PUBLIC SAFETY. TEMPORARY SIGNS AND BARRICADES SHALL BE PER WSDOT STANDARD SPECIFICATIONS. NO HAND PAINTED SIGNS WILL BE ALLOWED.
10. CONTRACTOR SHALL PREVENT THE TRACKING OF DIRT/SILT FROM THE WORK AREA ONTO ADJACENT ROADWAYS AND PAVED SURFACES. IF REQUIRED, CONTRACTOR SHALL SWEEP EXISTING PAVED SURFACES OF DIRT/SILT PROMPTLY UPON CONTAMINATION OR AS DIRECTED BY WSU.
11. IF AN UNDERGROUND STORAGE TANK OR UNDERGROUND PIPING CONTAINING OR COMPOSED OF ASBESTOS CONTAINING MATERIAL IS ENCOUNTERED, THE CONTRACTOR SHALL IMMEDIATELY CEASE WORK AND REPORT TO THE OWNER'S PROJECT TEAM.
12. THE UNDERGROUND UTILITIES SHOWN HAVE BEEN LOCATED AS ACCURATELY AS POSSIBLE FROM FIELD SURVEY INFORMATION AND EXISTING DRAWINGS. TAYLOR ENGINEERING, INC. MAKES NO GUARANTEES THAT THE UNDERGROUND UTILITIES SHOWN COMPRISE ALL SUCH UTILITIES IN THE AREA, EITHER IN SERVICE OR ABANDONED. FURTHER, WE DO NOT WARRANT THAT THE UNDERGROUND UTILITIES SHOWN ARE IN EXACT LOCATION INDICATED, ALTHOUGH WE DO CERTIFY THAT THEY ARE LOCATED AS ACCURATELY AS POSSIBLE FROM INFORMATION AVAILABLE.

### GENERAL NOTES

1. THE CONTRACTOR SHALL FIELD VERIFY ALL EXISTING CONDITIONS PRIOR TO EXECUTING ANY WORK AND SHALL NOTIFY THE DEPARTMENT OF FACILITIES OPERATIONS IN WRITING OF ANYTHING DIFFERING FROM THAT SHOWN ON THE DRAWINGS. FAILURE TO DO SO WILL CONSTITUTE THE CONTRACTOR'S ACCEPTANCE OF THE WORK AS SHOWN.
2. ALL WORK SHALL COMPLY WITH ALL CODES, ORDINANCES AND REQUIREMENTS.
3. DO NOT SCALE DRAWINGS; WRITTEN DIMENSIONS SHALL PREVAIL.
4. THE CONTRACTOR SHALL OBTAIN ALL PERMITS REQUIRED PRIOR TO ANY PHASE OF CONSTRUCTION. FEES AND ANY RELATED COSTS ARE THE RESPONSIBILITY OF THE CONTRACTOR.
5. EXISTING BUILDINGS, UTILITIES, ETC. OR PORTIONS THEREOF, WHICH ARE DAMAGED BY CONSTRUCTION OPERATIONS SHALL BE REPAIRED OR REPLACED TO THEIR ORIGINAL CONDITION, UNLESS OTHERWISE NOTED TO BE REMODELED PER THE CONTRACT DOCUMENTS.
6. THE CONTRACTOR MUST CONTACT "CALL BEFORE YOU DIG", AT 1-(800) 424-5555 AND/OR ALL APPROPRIATE UTILITY COMPANIES FOR BURIED PIPES OR CABLES, PRIOR TO ANY EXCAVATION.
7. EXACT LOCATIONS OF EXISTING UTILITIES ARE TO BE VERIFIED BY THE CONTRACTOR.
8. THE DUTIES OF THE OWNER/WASHINGTON STATE UNIVERSITY, ITS ENGINEER, AND ITS DESIGNATED CONSULTING ENGINEER DOES NOT INCLUDE DESIGN AND CONSTRUCTION REVIEW SERVICES RELATING TO THE CONTRACTORS SAFETY PRECAUTIONS OR TO THE MEANS, METHODS, TECHNIQUES, SEQUENCES OR PROCEDURES REQUIRED FOR THE CONTRACTOR TO PERFORM HIS WORK.
9. FOLLOWING IS A LIST OF TELEPHONE NUMBERS THAT MAY NEED TO BE CONTACTED DURING THE CONSTRUCTION PHASE OF THE PROJECT:

| | | |
|---|---|---|
| [ ] | WSU DEPARTMENT OF FACILITIES OPERATIONS (UTILITY INFORMATION) | (509) 335-9000 |
| [ ] | AVISTA UTILITIES (GAS & POWER) | (509) 336-9038 |
| [ ] | CALL BEFORE YOU DIG | 1-(800) 424-5555 |

DESIGN FIRM:


SYNTIER Engineering, Inc.
405 SE Brelsford Dr., Suite C
Pullman, WA 99163
www.SynTierEngr.com 509.339.6187


CONSULTANTS:

PROVISIONAL STAMP:

SCOTT A. SUMNER — STATE OF WASHINGTON — 48109 REGISTERED PROFESSIONAL ENGINEER — 1/26/24


WASHINGTON STATE UNIVERSITY
Facilities Services
2425 E. Grimes Way
Pullman, Wa. 99164-1150
PH 509-335-5571
FAX 509-335-9304


WSU GOLF INDOOR PRACTICE FACILITY NEW UTILITIES

WSU-01

| MARK | DATE | DESCRIPTION |
|---|---|---|
| | 1/26/24 | REVISED DRAWINGS |

| | |
|---|---|
| CAD DWG FILE: WSU01-C1-COVERSHEET.dwg | |
| DESIGN BY: SAS | |
| DRAWN BY: SAS | CHECKED BY: SAS |
| PROJECT No. WSU-01 | FILE No.365B-G-003 |


COPYRIGHT: WASHINGTON STATE UNIVERSITY


SHEET TITLE

COVER SHEET

C1

SHEET 1 OF 3 SHEETS


FILE: P:\WSU-01 (WSU Golf Indoor Practice Facility)\WSU01-DWGS\Sheets\WSU01-C1-COVERSHEET.dwg PLOT DATE: OCTOBER 12, 2021 ORIGINAL PAPER SIZE: 22" x 34"

## DEMOLITION/REMOVAL LEGEND:

(P) CONTRACTOR SHALL PROTECT AND MAINTAIN IN PLACE.

(R) CONTRACTOR SHALL REMOVE AND DISPOSE OF LEGALLY OFF-SITE

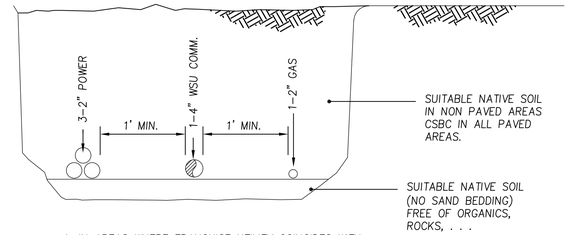


1. IN AREAS WHERE FRANCHISE UTILITY COINCIDES WITH DRAINAGE DITCH, 36" COVER BEGINS AT BOTTOM OF DITCH

## FRANCHISE COMMON TRENCH

N.T.S.

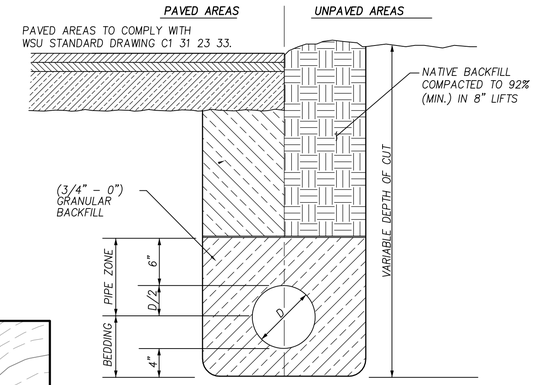


## PIPE BEDDING AND BACKFILL DETAIL

N.T.S.

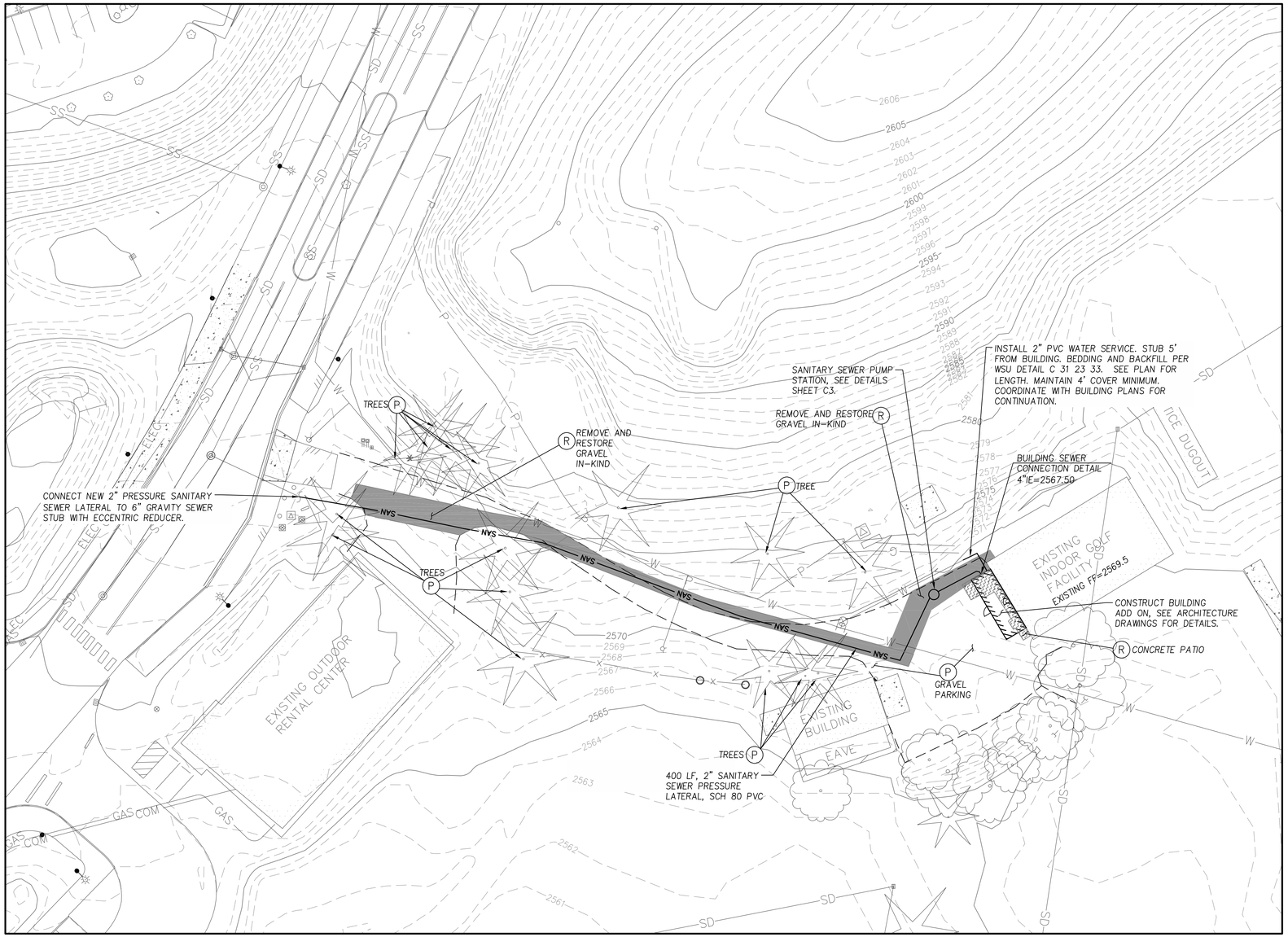


0 15 30 60

SCALE: 1" = 30'

UNDERGROUND SERVICE ALERT
ONE-CALL NUMBER
811
CALL TWO BUSINESS DAYS BEFORE YOU DIG

DESIGN FIRM:


SYNTIER Engineering, Inc.
405 SE Brelsford Dr., Suite C
Pullman, WA 99163
www.SynTierEngr.com 509.339.6187


CONSULTANTS:

PROVISIONAL STAMP:

SCOTT A. SUMMERS, STATE OF WASHINGTON, 48109, REGISTERED PROFESSIONAL ENGINEER, 1/26/24


WASHINGTON STATE UNIVERSITY
Facilities Services
2425 E. Grimes Way
Pullman, Wa. 99164-1150
PH 509-335-5571
FAX 509-335-9304


# WSU GOLF INDOOR PRACTICE FACILITY NEW UTILITIES

WSU-01

| MARK | DATE | DESCRIPTION |
|---|---|---|
| | 1/26/24 | REVISED DRAWINGS |

CAD DWG FILE: WSU01-C2-UTILITY PLAN.dwg

DESIGN BY: SAS

DRAWN BY: SAS | CHECKED BY: SAS

PROJECT No. WSU-01 | FILE No.365B-G-003


COPYRIGHT: WASHINGTON STATE UNIVERSITY


SHEET TITLE

## UTILITY PLAN

C2

SHEET 2 OF 3 SHEETS

FILE: P:\WSU-01 (WSU Golf Indoor Practice Facility)\WSU01-DWGS\Sheets\WSU01-C2-UTILITY PLAN.dwg PLOT DATE: OCTOBER 12, 2021 ORIGINAL PAPER SIZE: 22" x 34"

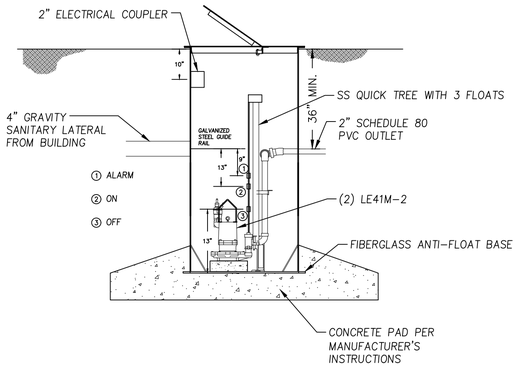


## SANITARY SEWER LIFT STATION/WETWELL

N.T.S.

| PUMP SCHEDULE | | | | | | | | | | |
|---|---|---|---|---|---|---|---|---|---|---|
| PUMP | | | MOTOR | | ELECTRICAL | | | | BASIS OF DESIGN | |
| TYPE | FLOW (GPM) | TOTAL HEAD (FT) | SPEED | HP | V | HZ | PHASE | FLA | MANUFACTURER | MODEL |
| SUBMERSIBLE | 37 | 17 | 1725 | 4/10 | 115 | 60 | 1 | 12 | LIBERTY | LE41M-2 |
| SUBMERSIBLE | 37 | 17 | 1725 | 4/10 | 115 | 60 | 1 | 12 | LIBERTY | LE41M-2 |

1. DUPLEX ALTERNATING CONTROL PANEL, NEMA 4X, INCLUDING THREE FLOATS, AUX. CONTACTS. INTEGRAL AUDIO/VISUAL HIGH LEVEL ALARM, LIBERTY #AE24L=3
2. DUPLEX FIBERGLASS BASIN AND BLANK COVER, 36" DIAMETER X 120", ANTI-FLOAT RING. 2" DIAMETER SIDE DISCHARGE, LIBERTY EPS70958M
3. TWO GALVANIZED STEEL GUIDE RAIL ASSEMBLIES, LIBERTY #GR22-S
4. 4" DIAMETER FIELD MOUNTED INLET HUB, PVC BALL VALVES, PVC CHECK VALVES, FLOAT BRACKET
5. JUNCTION BOX WITH WATERTIGHT CABLE CONNECTORS AND 2" CONDUIT COUPLING, LIBERTY #JB70.

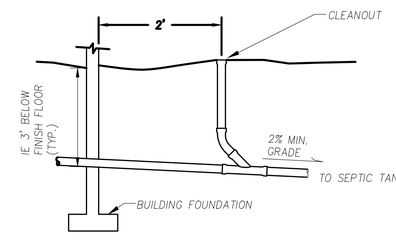


## TYPICAL SEWER CONNECTION

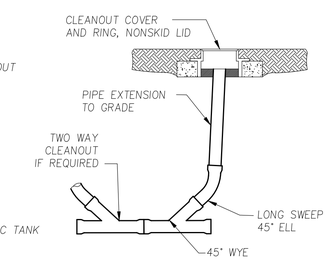


## CLEANOUT DETAILS

NOTES:

1. PIPE DIAMETER SHALL BE 4 INCHES OR GREATER. SEE PLAN SHEETS FOR ACCEPTABLE MATERIALS.
2. PIPES STUBBED OUT FOR FUTURE BUILDING CONNECTIONS OR PUBLIC UTILITY CONNECTION SHALL BE PLUGGED WITH A FITTING APPROVED BY THE MANUFACTURER.
3. MAXIMUM DISTANCE BETWEEN CLEANOUTS SHALL BE 100 FEET. THE MAXIMUM AGGREGATE CHANGE IN DIRECTION BETWEEN CLEANOUTS SHALL BE 135°. CONSTRUCT ADDITIONAL CLEANOUTS AS NECESSARY.
4. A WATER SERVICE AND A SEWER SERVICE MAY BE PLACED IN THE SAME TRENCH IF THE WATER SERVICE IS PLACED ON AN UNDISTURBED EARTH SHELF 12 INCHES (MIN) ABOVE THE SIDE SEWER.
5. MINIMUM COVER IN TRAFFIC AREAS IS 3 FEET (2 FEET IN LANDSCAPED AREAS)

## BUILDING SEWER CONNECTION DETAILS

N.T.S.

DESIGN FIRM:

SYNTIER Engineering, Inc.
405 SE Brelsford Dr., Suite C
Pullman, WA 99163
www.SynTierEngr.com 509.339.6187

CONSULTANTS:

PROVISIONAL STAMP:

SCOTT A. SUMMERS STATE OF WASHINGTON 48109 REGISTERED PROFESSIONAL ENGINEER
1/26/24

WASHINGTON STATE UNIVERSITY
Facilities Services
2425 E. Grimes Way
Pullman, Wa. 99164-1150
PH 509-335-5571
FAX 509-335-9304

# WSU GOLF INDOOR PRACTICE FACILITY NEW UTILITIES

WSU-01

| MARK | DATE | DESCRIPTION |
|---|---|---|
| | 1/26/24 | REVISED DRAWINGS |

CAD DWG FILE: WSU01-C3-DETAILS.dwg
DESIGN BY: SAS
DRAWN BY: SAS | CHECKED BY: SAS
PROJECT No. WSU-01 | FILE No.365B-G-003
COPYRIGHT: WASHINGTON STATE UNIVERSITY

SHEET TITLE

DETAILS

C3

SHEET 3 OF 3 SHEETS

FILE: P:\WSU-01 (WSU Golf Indoor Practice Facility)\WSU01-DWGS\Sheets\WSU01-C3-DETAILS.dwg PLOT DATE: OCTOBER 12, 2021 ORIGINAL PAPER SIZE: 22" x 34"

## SHEET NOTES

1. SEE SHEET G1.00 FOR SYMBOLS AND ABBREVIATIONS.
2. PROVIDE SOLID WOOD BLOCKING AS REQUIRED TO SUPPORT WALL HUNG EQUIPMENT, GRAB BARS, RAILINGS, SIGNAGE AND OTHER ACCESSORIES TO REQUIRE SUPPORT. VERIFY LOCATIONS PRIOR TO INSTALLATION OF GYPSUM BOARD.
3. DOORS AND CASED OPENINGS WITHOUT LOCATION DIMENSIONS ARE TO BE 3" FROM ADJACENT PARTITION U.N.O.
4. DIMENSIONS ARE FROM FACE OF STUD OR FACE OF CONCRETE U.N.O.
5. INTERIOR WALL ASSEMBLIES SHALL BE BUILT TO HEIGHT INDICATED. NEW WALL BUILT ON EXISTING DECK EXTENDS TO UNDERSIDE OF NEW DECK.
6. INSTALL FULL HEIGHT AND WIDTH CEMENTITIOUS BACKER BOARD AT ALL TILE WALL LOCATIONS IN-LIEU OF GYPSUM BOARD. COORDINATE WITH INTERIOR ELEVATIONS AND FINISH SCHEDULE.
7. CONCEAL ALL EQUIPMENT, DEVICES AND PATHWAYS IN NEW CONSTRUCTION WITHIN PROJECT AREA.
8. COORDINATE MECHANICAL AND ELECTRICAL EQUIPMENT BLOCK-OUT LOCATIONS AND THRU-WALL PENETRATIONS FOR GYPSUM BOARD. SEE MECHANICAL AND ELECTRICAL SHEETS.
9. FLASH/WRAP ALL EXTERIOR OPENINGS THAT PENETRATE THE BUILDING ENVELOPE. SEE DETAIL
10. INSULATE EXTERIOR WALLS WHERE INDICATED ON PLAN.
11. PROVIDE CMU CONTROL JOINTS AS NOTED ON EXTERIOR ELEVATION. REFERENCE DETAIL
12. PROVIDE INTERIOR CMU RAKE JOINTS AT ACCENT-WALL PAINT. PAINT TRANSITION LOCATIONS. SEE INTERIOR ELEVATIONS.
13. SEE SHEET A8.00 FOR WALL AND PARTITION HEAD TYPES.
14. PROVIDE CONTINUOUS AIR BARRIER EXTENDING FROM SLAB TO ROOF AT ALL NEW EXTERIOR WALLS.
15. CONTRACTOR TO SEAL TOP AND BOTTOM OF WALLS AND ALL JOINTS, CORNERS, AND PENETRATIONS TO BE AIR TIGHT.

## FLOOR PLAN LEGEND

- NEW INTERIOR FRAMED WALL LOCATION OR WALL INFILL TO MATCH EXISTING WALL DEPTH FLUSH ON BOTH SIDES.
- NEW MASONRY WALL
- NEW FRAMED WALL OR WALL INFILL WITH MASONRY VENEER AND/OR STUCCO/METAL SIDING ABOVE. SEE ELEVATIONS FOR EXTENT OF VENEER AND ADDITIONAL FINISHES.
- XX/XX.XX — EXTERIOR ELEVATIONS
- 05 — NEW WINDOW LOCATION, SEE WINDOW TYPES ON SHEET A6.01
- XX/XX.XX — INTERIOR ELEVATIONS
- 101 — DOOR NUMBER - SEE DOOR SCHEDULE
- N.1P4S — NEW WALL TAG. SEE SHEET A8.00 FOR DETAILS

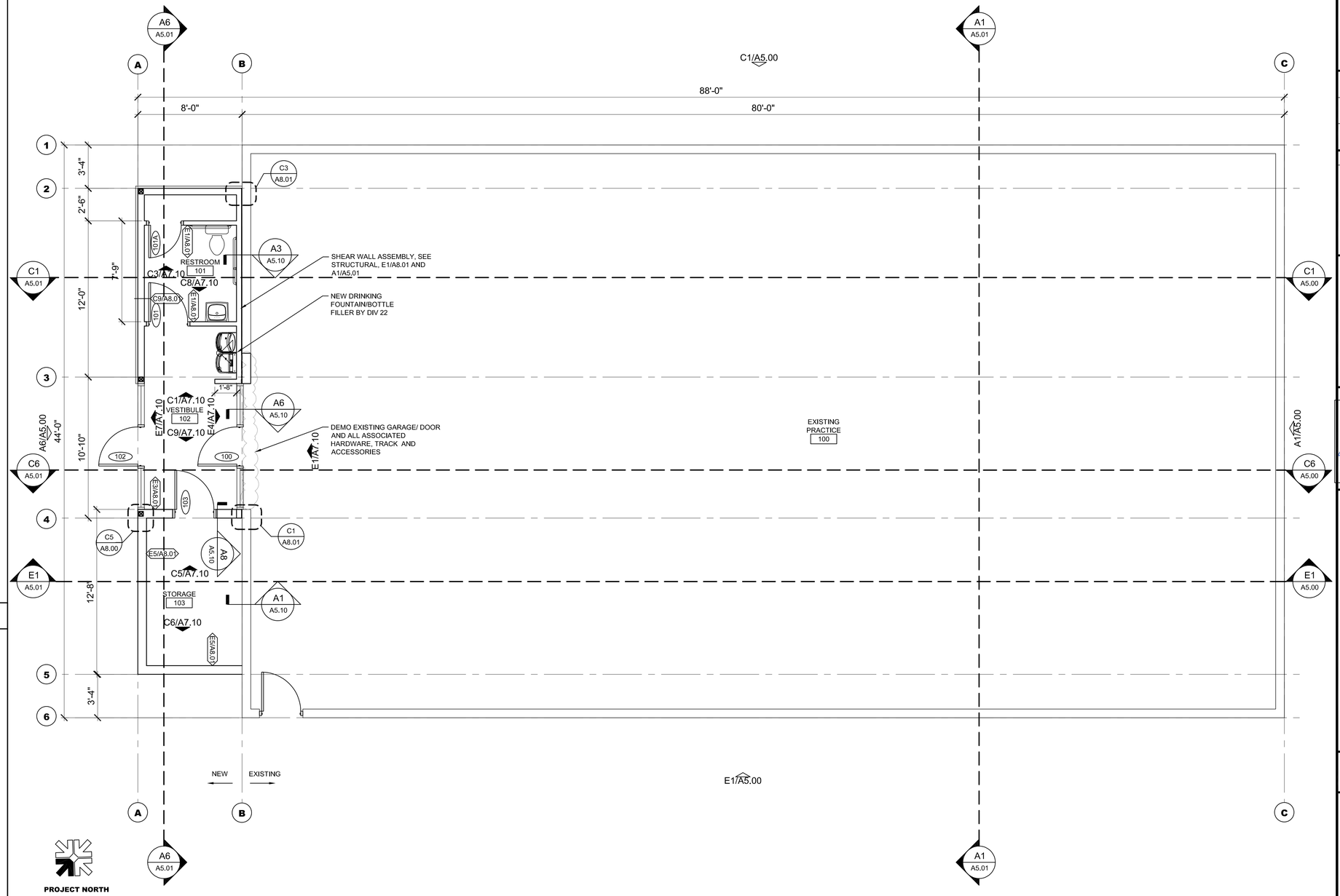


## FLOOR PLAN LEGEND

| | |
|---|---|
| NEW INTERIOR FRAMED WALL LOCATION OR WALL INFILL TO MATCH EXISTING WALL DEPTH FLUSH ON BOTH SIDES. | |
| NEW MASONRY WALL | |
| NEW FRAMED WALL OR WALL INFILL WITH MASONRY VENEER AND/OR STUCCO/METAL SIDING ABOVE. SEE ELEVATIONS FOR EXTENT OF VENEER AND ADDITIONAL FINISHES. | |
| XX/XX.XX | EXTERIOR ELEVATIONS |
| 05 | NEW WINDOW LOCATION, SEE WINDOW TYPES ON SHEET A6.01 |
| XX/XX.XX | INTERIOR ELEVATIONS |
| 101 | DOOR NUMBER - SEE DOOR SCHEDULE |
| N.1P4S | NEW WALL TAG. SEE SHEET A8.00 FOR DETAILS |

# A1 OVERALL FLOOR PLAN

SCALE: $\frac{1}{4}$"=1'

DESIGN WEST ARCHITECTS, P.A.
• MERIDIAN, IDAHO • PULLMAN, WASHINGTON •
• KENNEWICK, WASHINGTON • ONTARIO, OREGON •
www.designwestpa.com

© COPYRIGHT DESIGN WEST ARCHITECTS P.A. DESIGN CONCEPTS AND DRAWINGS NOT TO BE REUSED WITHOUT WRITTEN PERMISSION OF ARCHITECT

DRAWN BY: SG
CHECKED BY: NW
JOB NUMBER: 22103
REVISIONS

STATE OF WASHINGTON 01/26/24

**WSU GOLF TEAM CLUBHOUSE UPGRADE EXTERIOR & BLDG ADDITION**
**WASHINGTON STATE UNIVERSTIY PULLMAN, WA 99163**

DATE: **1/26/2024**

SHEET NAME: **FLOOR PLAN**

SHEET: **A3.30**

Sam Gregg 1/27/2024 4:28:34 PM

## SHEET NOTES

1. SPOT ELEVATIONS ARE FROM FINISH FLOOR TO FINISH CEILING.
2. ELECTRICAL AND MECHANICAL SHOWN FOR REFERENCE ONLY. SEE RELATED ELECTRICAL AND MECHANICAL DRAWINGS.
3. SEE FIRE ALARM AND SPRINKLER PLANS/SUBMITTALS FOR ADDITIONAL INFORMATION AND REQUIREMENTS.
4. MAINTAIN REQUIRED FIRE RATINGS AT ALL RATED FLOOR, WALL, CEILING, AND ROOF ASSEMBLIES RECESSED OR PENETRATED BY FIXTURES, PIPING, CONDUIT, DUCTWORK, AND/OR OTHER ELEMENTS.
5. SEE SHEET A8.00 AND A8.01 FOR TYPICAL CEILING DETAILS AND ASSEMBLIES.
6. ALL NEW WALLS SHALL EXTEND TO THE UNDERSIDE OF THE FLOOR OR ROOF DECK ABOVE UNLESS NOTED OTHERWISE. CONTINUE WALLS ABOVE EXISTING ROOF DECK UP TO NEW ROOF DECK WHERE OCCURS. SEAL ALL PENETRATIONS AND JOINTS WITH ACOUSTICAL SEALANT. REFERENCE SPECIFICATION SECTION 07 92 00.

## LEGEND

- OPEN TO STRUCTURE ABOVE SAND/PREPARE FOR PAINT PER SCHEDULE
- GWB, PAINT
- EXTERIOR SOFFIT PANEL
- **N.C.** NO CEILING
- **10'-0"** CEILING HEIGHT ABOVE FINISH FLOOR
- SEE ELECTRICAL FOR LIGHTING FIXTURES AND CEILING MOUNTED ELECTRICAL DEVICES
- SEE MECHANICAL FOR SUPPLY, RETURN AND EXHAUST GRILLES

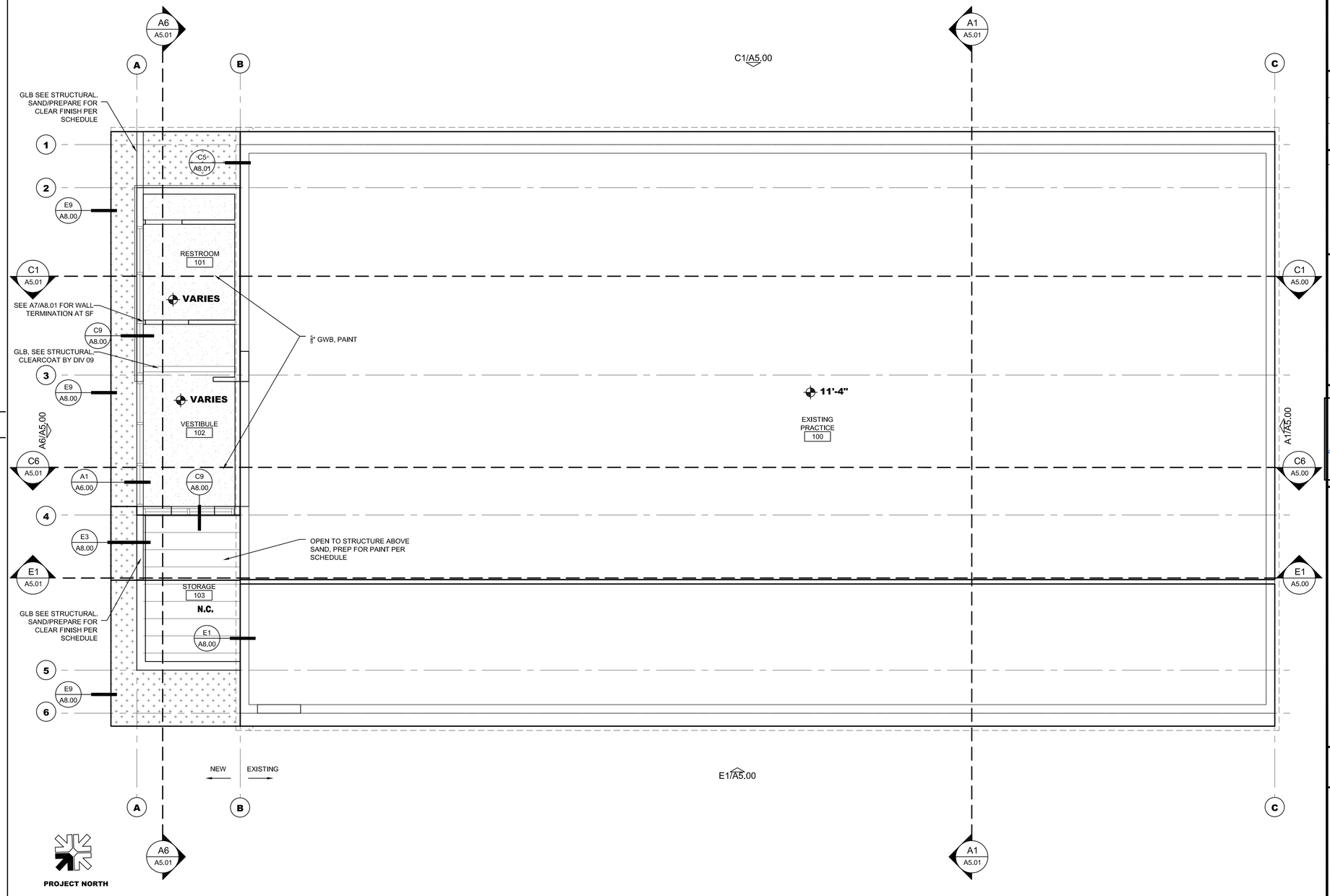


**A1** REFLECTED CEILING PLAN

SCALE: 1/4"=1'

DESIGN WEST ARCHITECTS, P.A.
• MERIDIAN, IDAHO • PULLMAN, WASHINGTON •
• KENNEWICK, WASHINGTON • ONTARIO, OREGON •
www.designwestpa.com

© COPYRIGHT DESIGN WEST ARCHITECTS P.A. DESIGN CONCEPTS AND DRAWINGS NOT TO BE REUSED WITHOUT WRITTEN PERMISSION OF ARCHITECT

DRAWN BY: SG
CHECKED BY: NW
JOB NUMBER: 22103
REVISIONS

01/26/24

WSU GOLF TEAM CLUBHOUSE UPGRADE EXTERIOR & BLDG ADDITION
WASHINGTON STATE UNIVERSTIY
PULLMAN, WA 99163

DATE: 1/26/2024

SHEET NAME: REFLECTED CEILING PLAN

SHEET: A3.50

Sam Gregg 1/26/2024 1:31:07 PM

## SHEET NOTES

1. SEE DETAILS FOR VENT PIPE FLASHING DETAILS.
2. REFER TO MECHANICAL PLANS FOR HVAC UNIT LOCATIONS AND VENT PIPE PENETRATIONS.
3. MAINTAIN POSITIVE ROOF SLOPE AT ALL CRICKETS, VALLEYS, AND OVERBUILDS FOR POSITIVE DRAINAGE FROM ALL POINTS TO ROOF DRAINS, 1/4:12 MIN. AND AS NOTED ON PLANS.
4. PROVIDE HEAT TAPE IN ALL OF THE ROOF DRAINS, DOWNSPOUTS AND THE OVERFLOW DRAINS.
5. REFER TO STRUCTURAL FOR FRAMING REQUIREMENTS AND ADDITIONAL INFORMATION.REFER TO STRUCTURAL DRAWINGS FOR WALL SUPPORTS AND COORDINATE DURING ROOF FRAMING STAGE IN ORDER TO LOCATE AND ESTABLISH EXACT LOCATIONS OF SUPPLEMENTAL FRAMING FOR ROOF & WALL OPENINGS.

PROVIDE ALL NECESSARY ROOFING ACCESSORIES INCLUDING:

REGLETS, BINDER BARS, FLASHING, COLLARS & BOOTS, FASTENERS, ETC. FOR A COMPLETE WARRANTIED ROOF SYSTEM INSTALLATION.

PRIOR TO ROOFING INSTALLATION, CONTRACTOR SHALL PHYSICALLY INSPECT ROOF SLOPE TO VERIFY ADEQUATE DRAINAGE .

ALL EXPOSED METAL AND FLASHING TO BE PREFINISHED SHEET METAL FLASHING AND TRIM. MATCH ADJACENT MATERIAL COLOR BEING FLASHED.

VERIFY LOCATIONS AND QUANITY OF ROOF VENT/ROOF CAP PENETRATIONS WITH HVAC-PLUMBING DRAWINGS. PROVIDE FLASHINGS AND/OR CURBS AS REQ'D. ACCORDING TO ROOF SYSTEM MFR. RECOMMENDED STANDARD DETAILS.

6. REFER ALSO TO SHEETS A8.00 AND A8.01 FOR ROOF ASSEMBLIES AND DETAILS.

## LEGEND

LOW ROOF — 07 54 00.01 - ROOFING MEMBRANE SHEET MEMBRANE ROOFING WHITE COLOR

UPPER ROOF — 07 61 13.01 - STANDING SEAM METAL ROOF ASSEMBLY

07 54 00.01 - ROOFING MEMBRANE CRICKET AREAS (TAPERED INSULATION) SLOPE AT 1/2" PER FOOT

EXTENT OF SNOWGUARD - TO INCLUDE TWO ROWS AT ALL LOCATIONS SPACED 24" APART

SLOPE ROOF DIRECTION OF ARROW

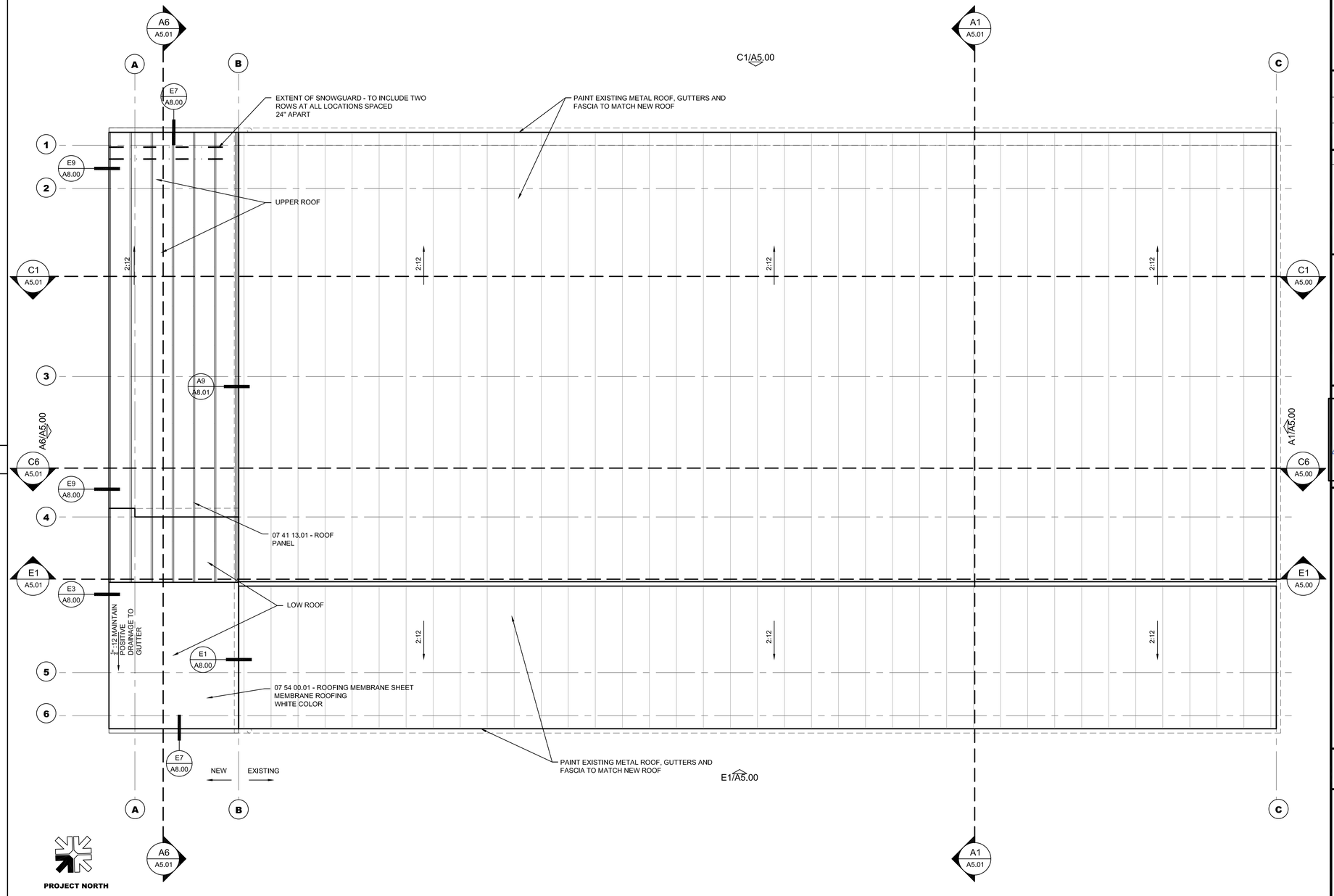


**A1** ROOF PLAN

SCALE: $\frac{1}{4}$"=1'

DESIGN WEST ARCHITECTS, P.A.
• MERIDIAN, IDAHO • PULLMAN, WASHINGTON •
• KENNEWICK, WASHINGTON • ONTARIO, OREGON •
www.designwestpa.com

© COPYRIGHT DESIGN WEST ARCHITECTS P.A. DESIGN CONCEPTS AND DRAWINGS NOT TO BE REUSED WITHOUT WRITTEN PERMISSION OF ARCHITECT

DRAWN BY: SG
CHECKED BY: NW
JOB NUMBER: 22103
REVISIONS

REGISTERED ARCHITECT STATE OF WASHINGTON 01/26/24

**WSU GOLF TEAM CLUBHOUSE UPGRADE EXTERIOR & BLDG ADDITION**
**WASHINGTON STATE UNIVERSTIY PULLMAN, WA 99163**

DATE: **1/26/2024**

SHEET NAME: **ROOF PLAN**

SHEET: **A3.60**

Sam Gregg 1/25/2024 4:24:50 PM

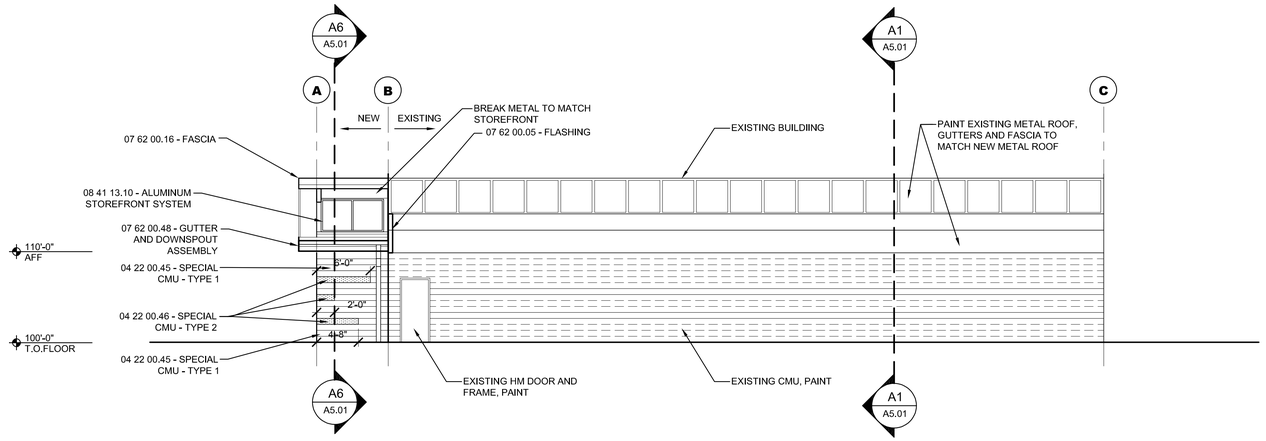


## E1 EAST ELEVATION

SCALE: 1/8"=1'

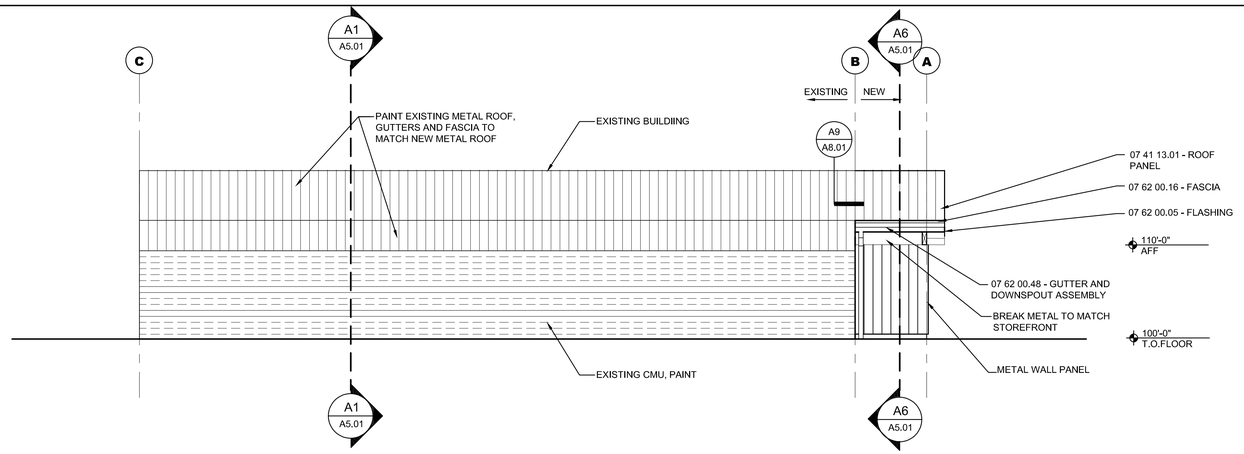


## C1 WEST ELEVATION

SCALE: 1/8"=1'

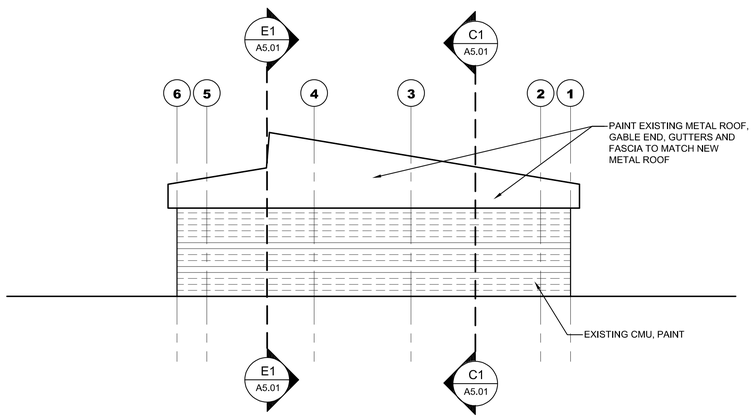


## A1 NORTH ELEVATION

SCALE: 1/8"=1'

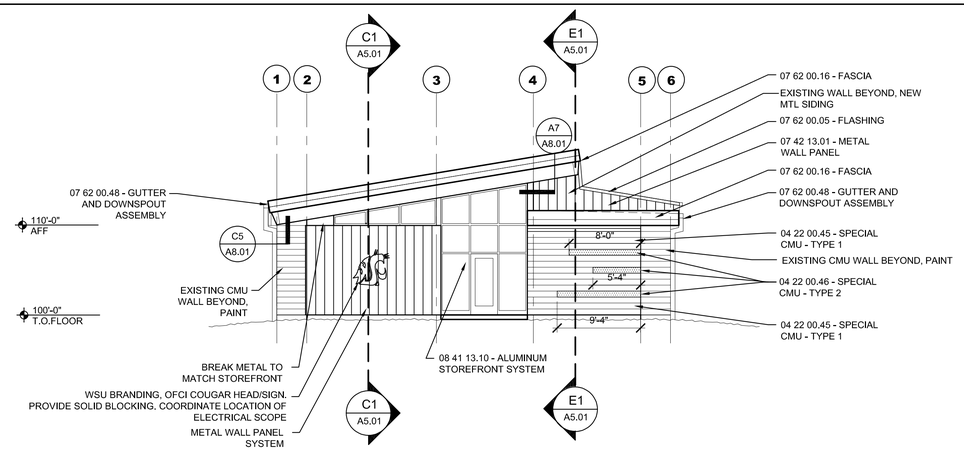


## A6 NORTH ELEVATION

SCALE: 1/8"=1'

DESIGN WEST ARCHITECTS, P.A.
• MERIDIAN, IDAHO • PULLMAN, WASHINGTON •
• KENNEWICK, WASHINGTON • ONTARIO, OREGON •
www.designwestpa.com

© COPYRIGHT DESIGN WEST ARCHITECTS P.A. DESIGN CONCEPTS AND DRAWINGS NOT TO BE REUSED WITHOUT WRITTEN PERMISSION OF ARCHITECT

DRAWN BY
SG

CHECKED BY
NW

JOB NUMBER
22103

REVISIONS

LICENSED ARCHITECT
STATE OF WASHINGTON
01/26/24

**WSU GOLF TEAM CLUBHOUSE UPGRADE EXTERIOR & BLDG ADDITION**

**WASHINGTON STATE UNIVERSTIY PULLMAN, WA 99163**

DATE
**1/26/2024**

SHEET NAME
**EXTERIOR ELEVATIONS**

SHEET
**A5.00**

Sam Gregg 1/25/2024 4:23:56 PM

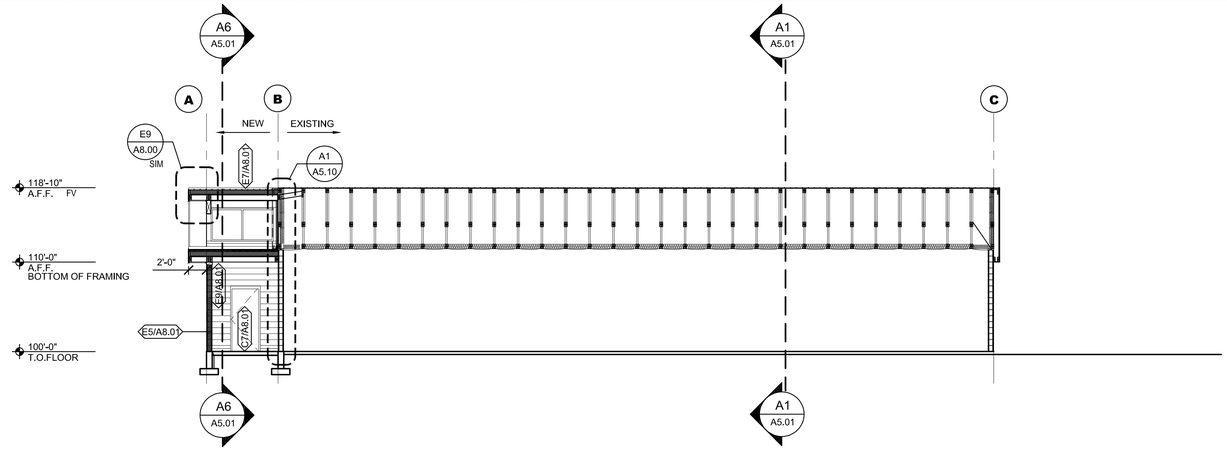


## E1 BUILDING SECTION

SCALE: 1/8"=1'

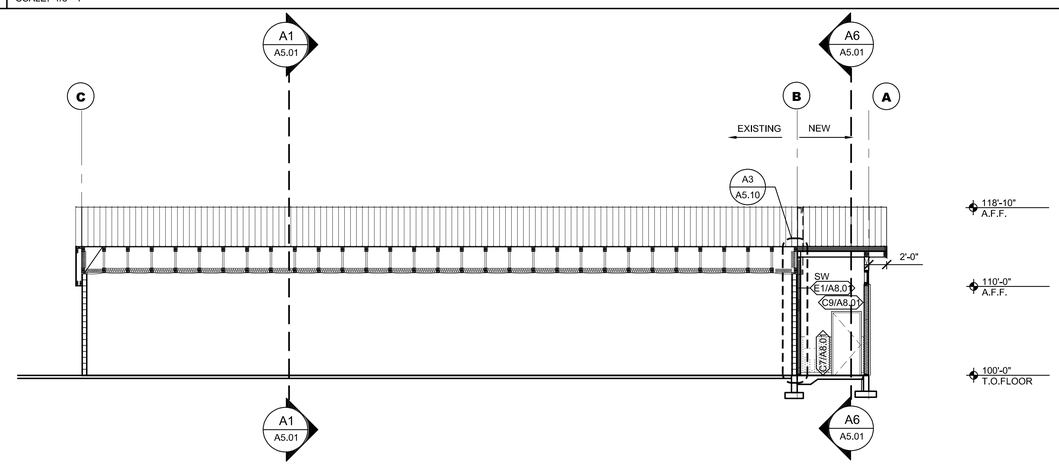


## C1 BUILDING SECTION

SCALE: 1/8"=1'

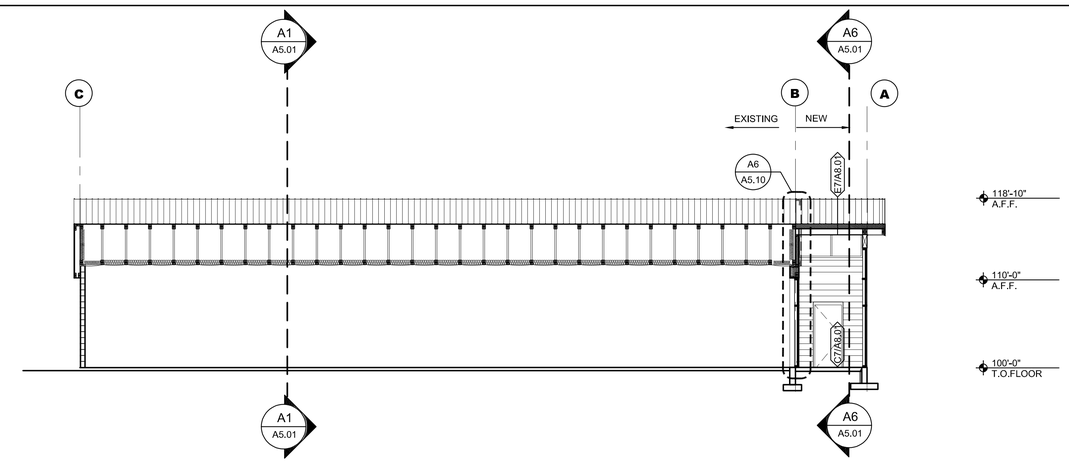


## C6 BUILDING SECTION

SCALE: 1/8"=1'

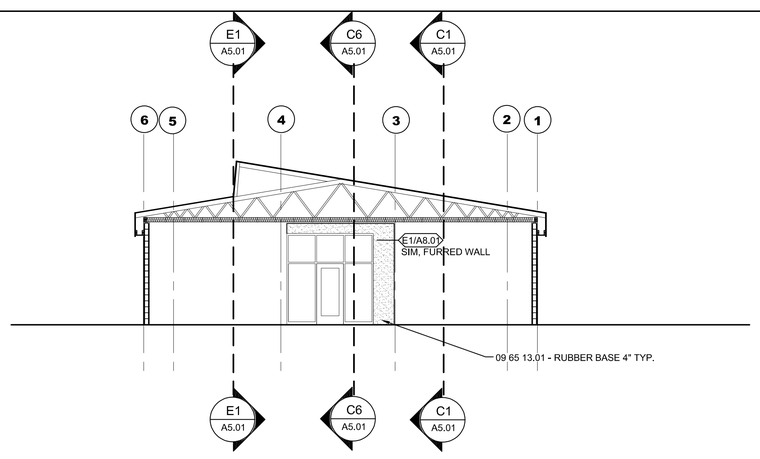


## A1 BUILDING SECTION

SCALE: 1/8"=1'

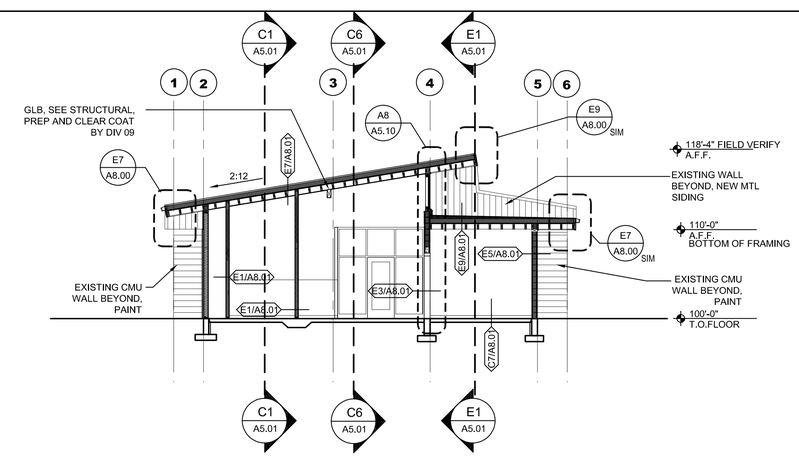


## A6 BUILDING SECTION

SCALE: 1/8"=1'

DESIGN WEST ARCHITECTS, P.A.
• MERIDIAN, IDAHO • PULLMAN, WASHINGTON •
• KENNEWICK, WASHINGTON • ONTARIO, OREGON •
www.designwestpa.com

© COPYRIGHT DESIGN WEST ARCHITECTS P.A. DESIGN CONCEPTS AND DRAWINGS NOT TO BE REUSED WITHOUT WRITTEN PERMISSION OF ARCHITECT

DRAWN BY
SG

CHECKED BY
NW

JOB NUMBER
22103

REVISIONS

STATE OF WASHINGTON
01/26/24

**WSU GOLF TEAM**
**CLUBHOUSE UPGRADE**
**EXTERIOR & BLDG ADDITION**
**WASHINGTON STATE UNIVERSTIY**
**PULLMAN, WA 99163**

DATE
**1/26/2024**

SHEET NAME
**BUILDING SECTIONS**

SHEET
**A5.01**

Sam Gregg 1/26/2024 12:13:33 PM

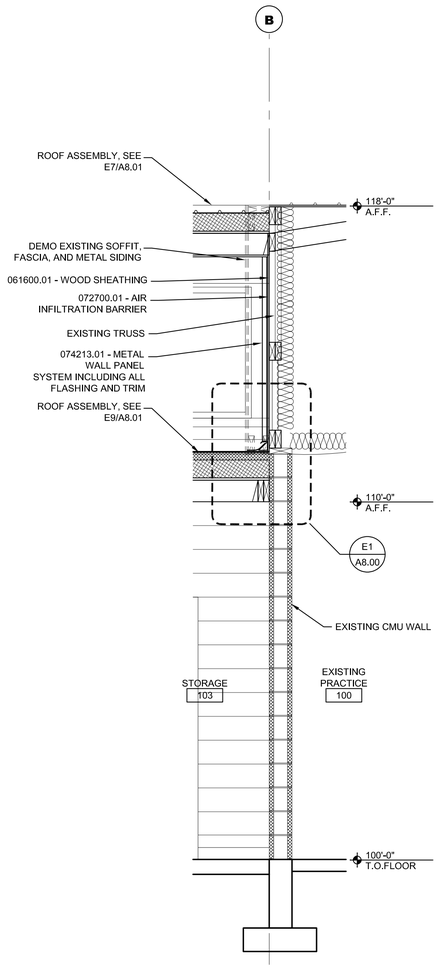


**A1** **BUILDING SECTION**
SCALE: 1/8"=1'

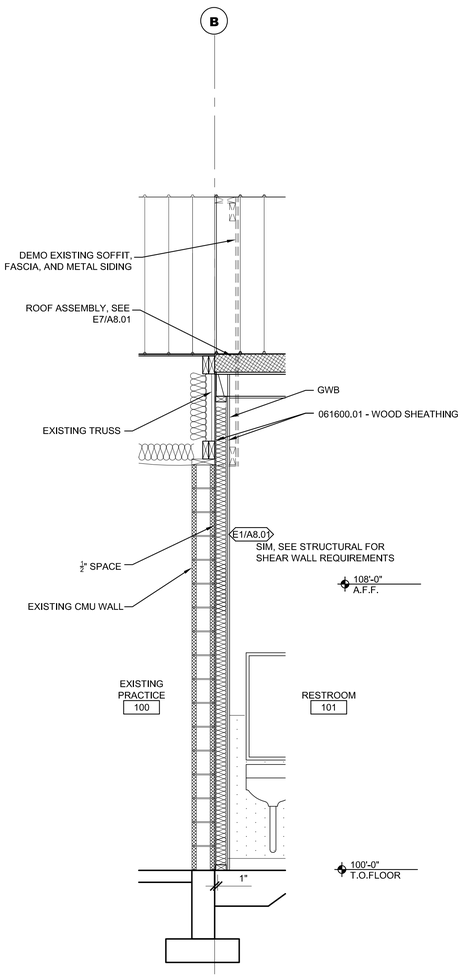


**A3** **BUILDING SECTION**
SCALE: 1/8"=1'

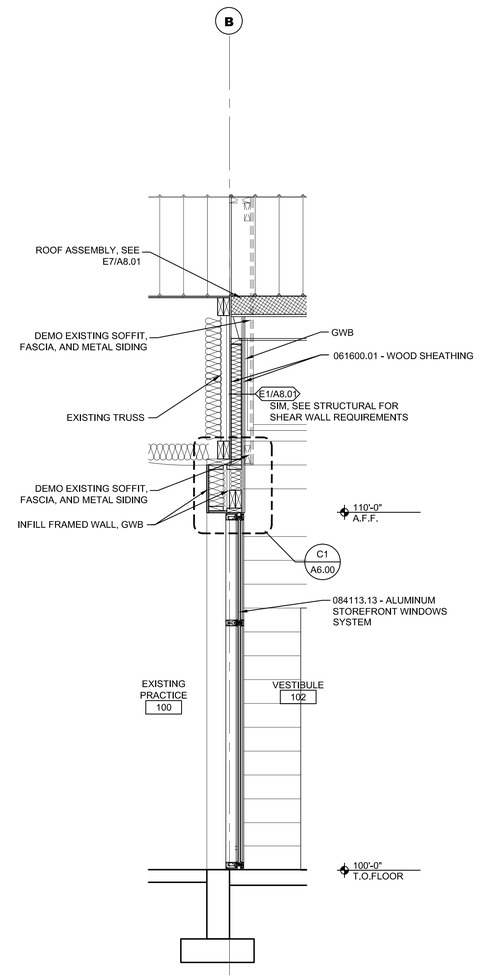


**A6** **BUILDING SECTION**
SCALE: 1/8"=1'

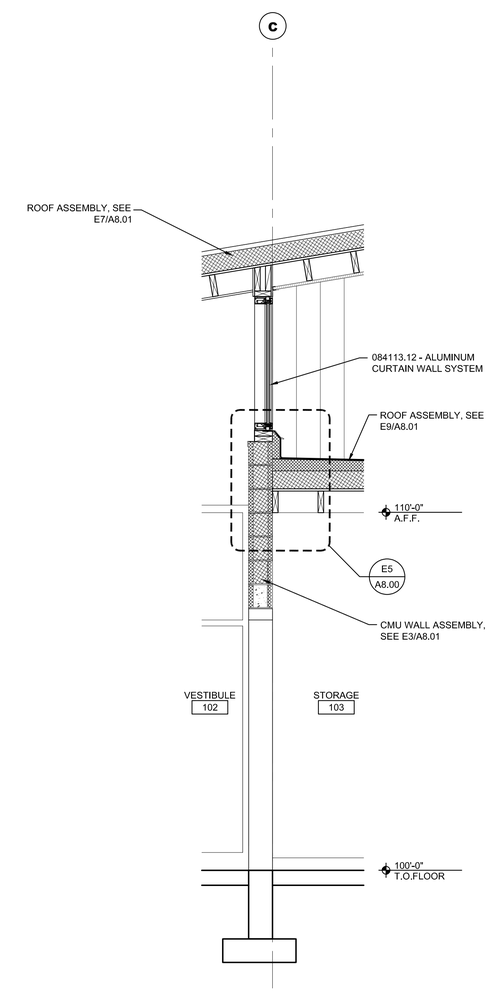


**A8** **BUILDING SECTION**
SCALE: 1/8"=1'

DESIGN WEST ARCHITECTS, P.A.
• MERIDIAN, IDAHO • PULLMAN, WASHINGTON •
• KENNEWICK, WASHINGTON • ONTARIO, OREGON •
www.designwestpa.com

© COPYRIGHT DESIGN WEST ARCHITECTS P.A. DESIGN CONCEPTS AND DRAWINGS NOT TO BE REUSED WITHOUT WRITTEN PERMISSION OF ARCHITECT

DRAWN BY
SG

CHECKED BY
NW

JOB NUMBER
22103

REVISIONS

REGISTERED ARCHITECT
STATE OF WASHINGTON
01/26/24

**WSU GOLF TEAM CLUBHOUSE UPGRADE EXTERIOR & BLDG ADDITION**
**WASHINGTON STATE UNIVERSTIY PULLMAN, WA 99163**

DATE
**1/26/2024**

SHEET NAME
**WALL SECTIONS**

SHEET
**A5.10**

Sam Gregg 1/25/2024 4:10:19 PM

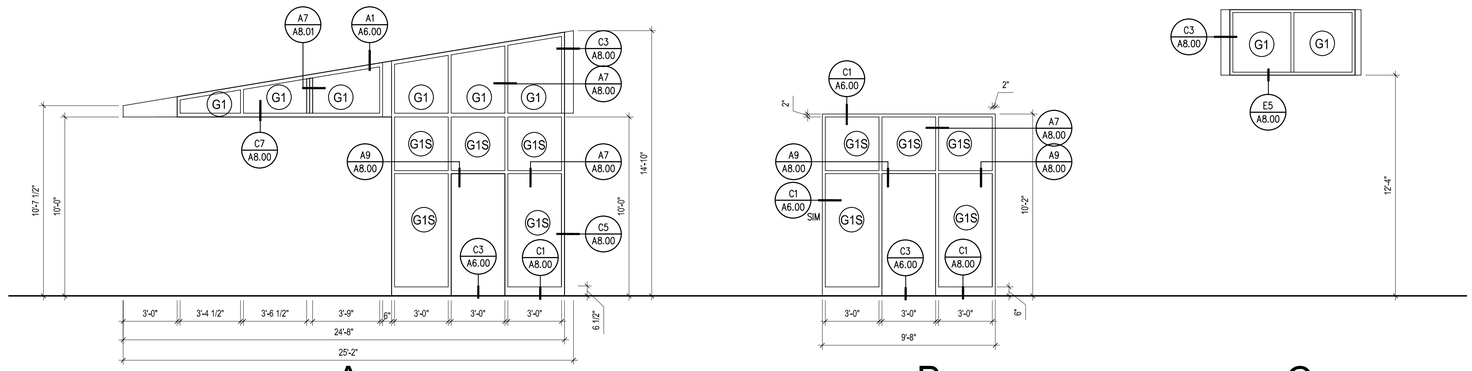


A
ALUMINUM CURTAINWALL SYSTEM

B
ALUMINUM STOREFRONT SYSTEM

C
ALUMINUM CURTAINWALL SYSTEM

## E1 ALUMINUM STOREFRONT WINDOWS

SCALE: 1/4"=1'

## GENERAL NOTES

1. PAINT ALL LOUVERS WITH FACTORY FINISH TO MATCH PT-8.
2. ALL ALUMINUM STOREFRONT DIMENSIONS TO BE FIELD VERIFIED PRIOR TO FABRICATION.
3. SEE G1/A8.40 FOR ALL EXT. OPENING FLASHING REQUIREMENTS.
4. REFERENCE DETAIL G3/A8.40 FOR STOREFRONT AND CURTAIN WALL PROFILES.

## WINDOW GLAZING

REFERENCE SPECIFICATION SECTION 08 80 00

| | |
|---|---|
| G1 | 1" INSULATED GLASS - CLEAR |
| G1S | GLAZING TYPE PER G1, SAFETY GLAZING |
| G2 | 1" INSULATED GLASS - SPANDREL |
| G2S | 1" INSULATED GLASS - SPANDREL SAFETY GLAZING |


DESIGN WEST ARCHITECTS, P.A.
• MERIDIAN, IDAHO • PULLMAN, WASHINGTON •
• KENNEWICK, WASHINGTON • ONTARIO, OREGON •
www.designwestpa.com



© COPYRIGHT DESIGN WEST ARCHITECTS P.A. DESIGN CONCEPTS AND DRAWINGS NOT TO BE REUSED WITHOUT WRITTEN PERMISSION OF ARCHITECT


DRAWN BY
SG

CHECKED BY
NW

JOB NUMBER
22103

REVISIONS

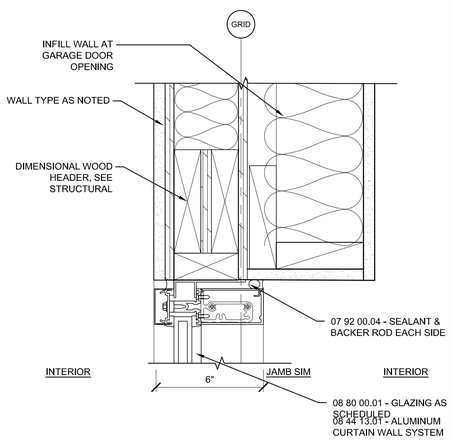


## C1 ST. FRONT WALL HEAD

SCALE: 3" = 1'-0" SF WALL GLAZING HEAD

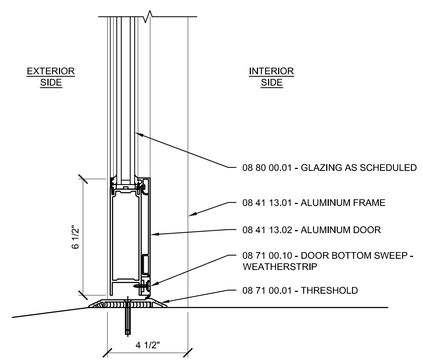


## C3 STOREFRONT DOOR SILL

SCALE: 3" = 1'-0" SF DOOR SILL

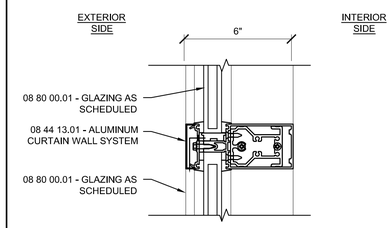


## C5 CT MULLION DETAIL

SCALE: 3" = 1'-0" CT INTERIOR MULLION

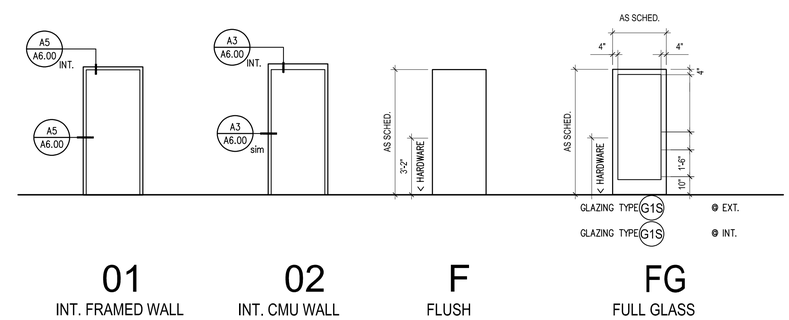


## C7 HOLLOW METAL FRAMES AND DOORS

SCALE: 1/4"=1'

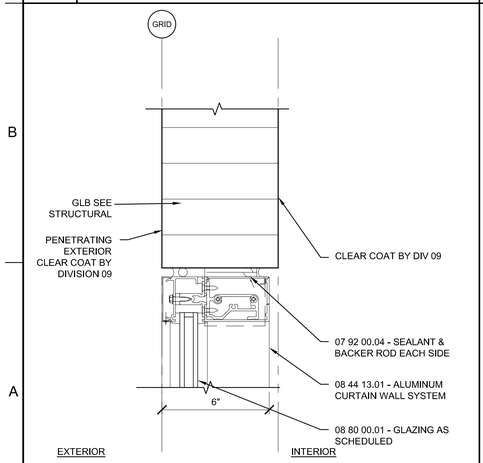


## A1 CT WALL GLAZING HEAD AT GLB

SCALE: 3" = 1'-0" CT WALL GLAZING HEAD @GLB

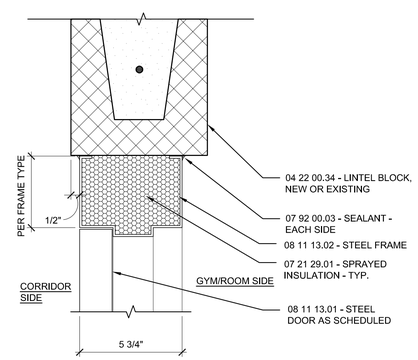


## A3 DOOR HEAD / JAMB AT CMU WALL

SCALE: 3" = 1'-0" HM HEAD AT CMU

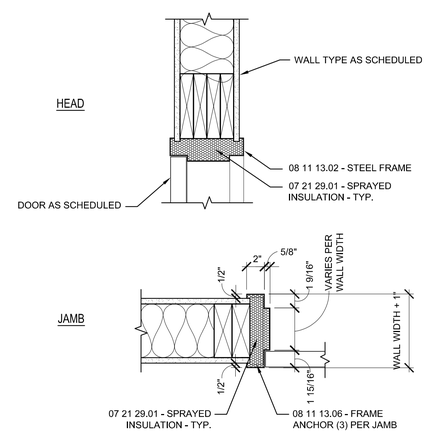


## A5 HOLLOW METAL FRAME

SCALE: 1 1/2" = 1'-0" INT. DOOR HEAD JAMB - FRAMED WALL

WSU GOLF TEAM
CLUBHOUSE UPGRADE
EXTERIOR & BLDG ADDITION
WASHINGTON STATE UNIVERSTIY
PULLMAN, WA 99163

DATE
1/26/2024

SHEET NAME
DOOR AND WINDOW TYPES

SHEET
A6.00

Sam Gregg 1/26/2024 1:58:52 PM

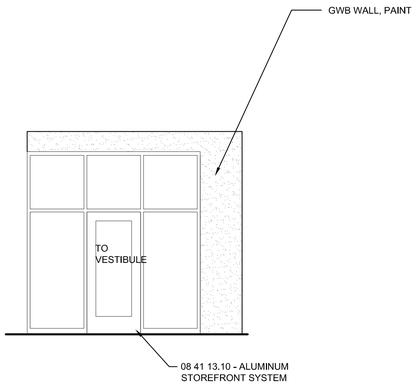


**E1** 100 PRACTICE FACILITY
SCALE: 1/4"=1'

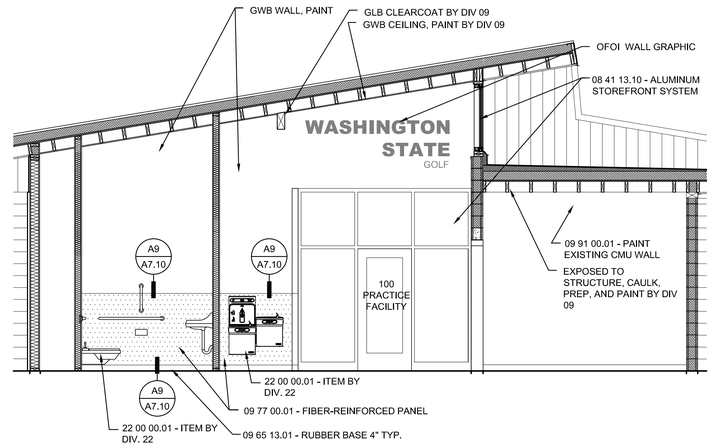


**E4** VESTIBULE_RESTROOM_STORAGE
SCALE: 1/4"=1'

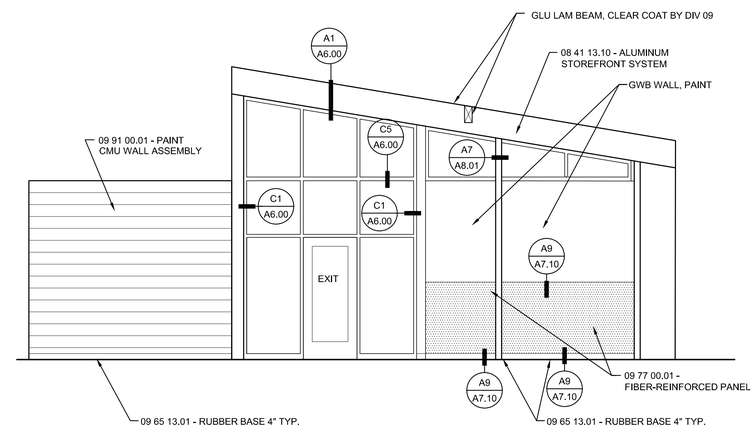


**E7** VESTIBULE_RESTROOM_STORAGE
SCALE: 1/4"=1'

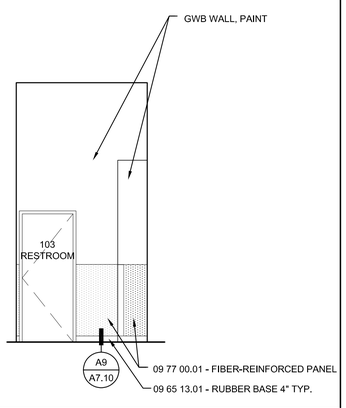


**C1** VESTIBULE
SCALE: 1/4"=1'

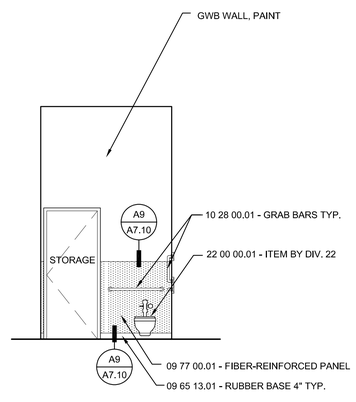


**C3** RESTROOM
SCALE: 1/4"=1'

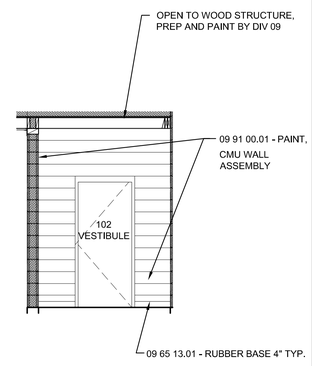


**C5** STORAGE
SCALE: 1/4"=1'

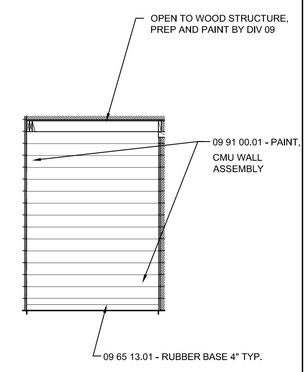


**C6** STORAGE
SCALE: 1/4"=1'

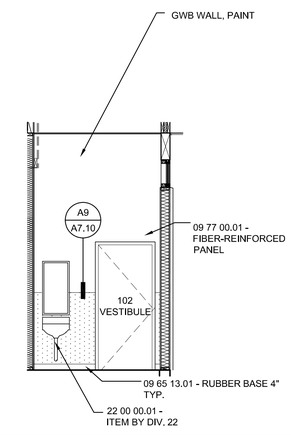


**C8** RESTROOM
SCALE: 1/4"=1'

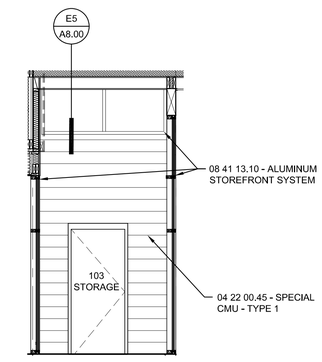


**C9** VESTIBULE
SCALE: 1/4"=1'

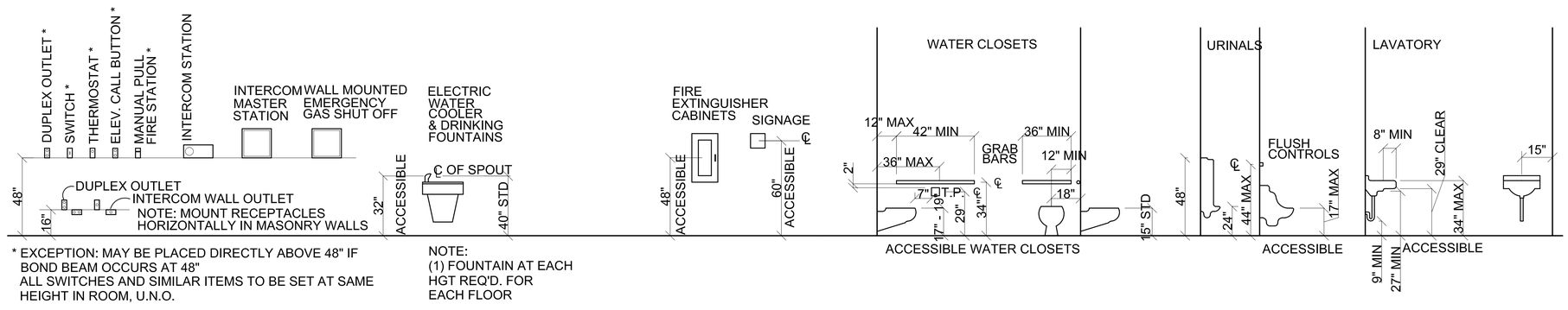


* EXCEPTION: MAY BE PLACED DIRECTLY ABOVE 48" IF BOND BEAM OCCURS AT 48"
ALL SWITCHES AND SIMILAR ITEMS TO BE SET AT SAME HEIGHT IN ROOM, U.N.O.

NOTE:
(1) FOUNTAIN AT EACH HGT REQ'D. FOR EACH FLOOR

**A1** STANDARD MOUNTING HEIGHTS
SCALE: NTS

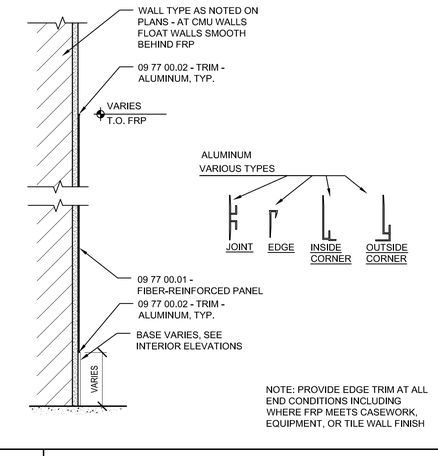


NOTE: PROVIDE EDGE TRIM AT ALL END CONDITIONS INCLUDING WHERE FRP MEETS CASEWORK, EQUIPMENT, OR TILE WALL FINISH

**A9** FRP WALL FINISH
SCALE: 1 1/2" = 1'-0"
FRP WALL

DESIGN WEST ARCHITECTS, P.A.
• MERIDIAN, IDAHO • PULLMAN, WASHINGTON •
• KENNEWICK, WASHINGTON • ONTARIO, OREGON •
www.designwestpa.com

© COPYRIGHT DESIGN WEST ARCHITECTS P.A. DESIGN CONCEPTS AND DRAWINGS NOT TO BE REUSED WITHOUT WRITTEN PERMISSION OF ARCHITECT

DRAWN BY
SG
CHECKED BY
NW
JOB NUMBER
22103
REVISIONS

STATE OF WASHINGTON
01/26/24

**WSU GOLF TEAM CLUBHOUSE UPGRADE EXTERIOR & BLDG ADDITION**
**WASHINGTON STATE UNIVERSTIY**
**PULLMAN, WA 99163**

DATE
**1/26/2024**

SHEET NAME
**INTERIOR ELEVATIONS**

SHEET
**A7.10**

Sam Gregg 1/29/2024 1:28:03 PM

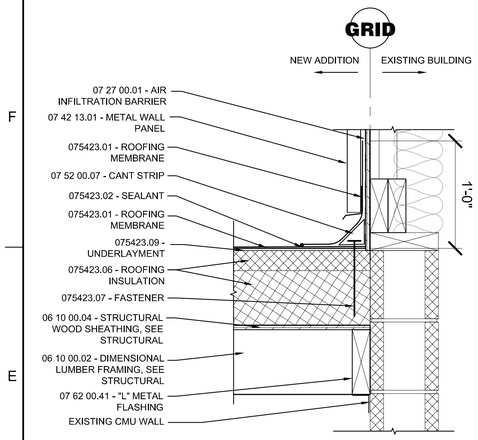


## E1 WALL_ROOF AT SINGLE PLY DETAIL

SCALE: 1 1/2" = 1'-0" REGLET SINGLE PLY

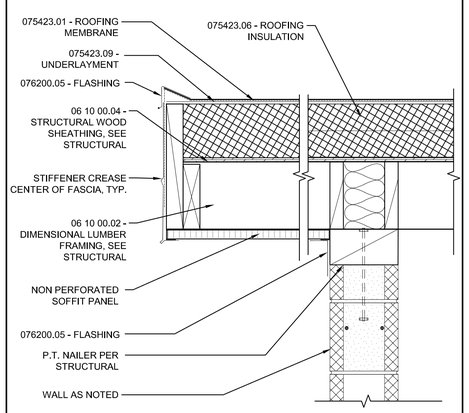


## E3 ROOF TO CMU

SCALE: 1 1/2" = 1'-0" ROOF TO WALL 02

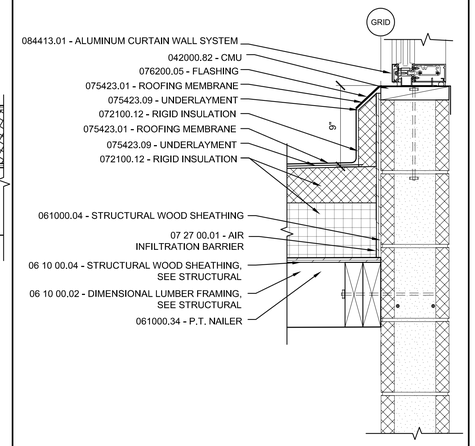


## E5 ROOF TO WALL

SCALE: 1 1/2" = 1'-0" ROOF TO WALL DETAIL 01

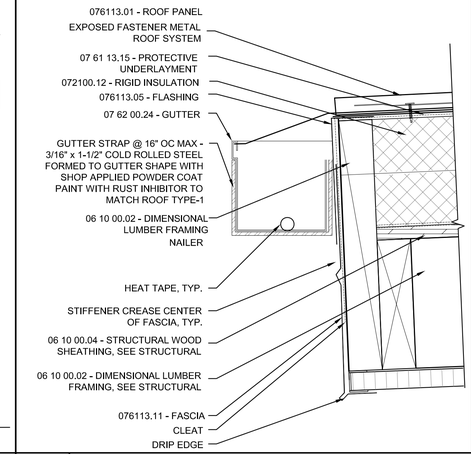


## E7 GUTTER SUPPORT DETAIL

SCALE: 3" = 1'-0" GUTTER DETAIL

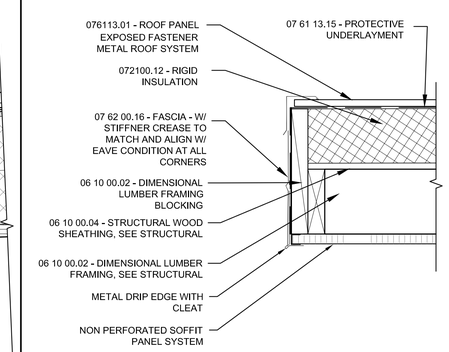


## E9 ROOF @ GLULAM BEAM

SCALE: 1 1/2" = 1'-0" CLT@GLB 02

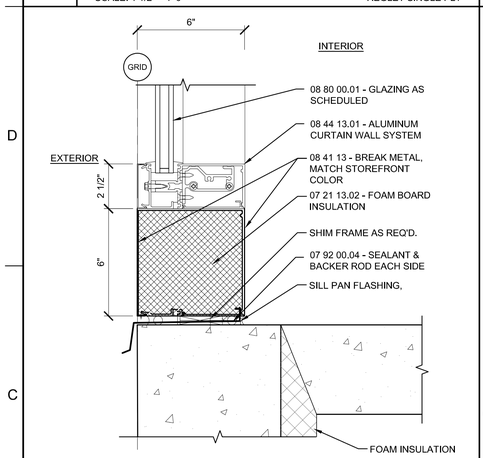


## C1 CT WALL GLAZING SILL

SCALE: 3" = 1'-0" CT WALL GLAZING SILL

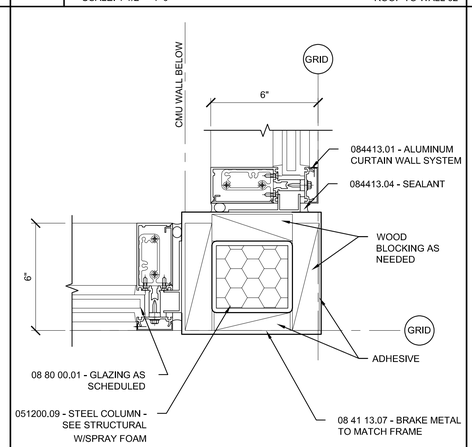


## C3 CURTAIN WALL GLAZING @ CORNER

SCALE: 3" = 1'-0" CW WALL GLAZING CORNER 03

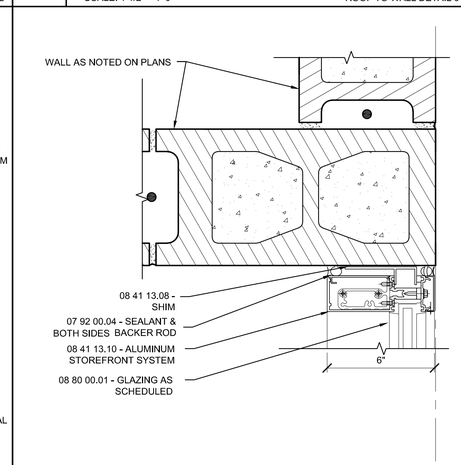


## C5 CT WALL GLAZING @ CMU

SCALE: 3" = 1'-0" SF WALL GLAZING CORNER 05

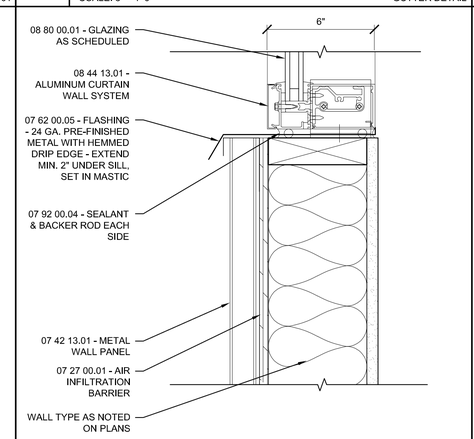


## C7 CT WALL GLAZING SILL

SCALE: 3" = 1'-0" CT GLAZING SILL @ MTL PANEL

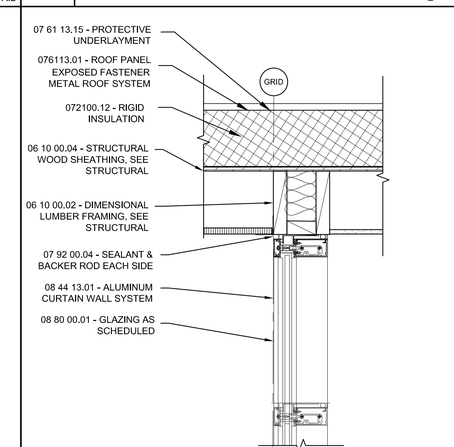


## C9 WINDOW HEAD AT FRAMING

SCALE: 1 1/2" = 1'-0" WINDOW HEAD @ FRAMING

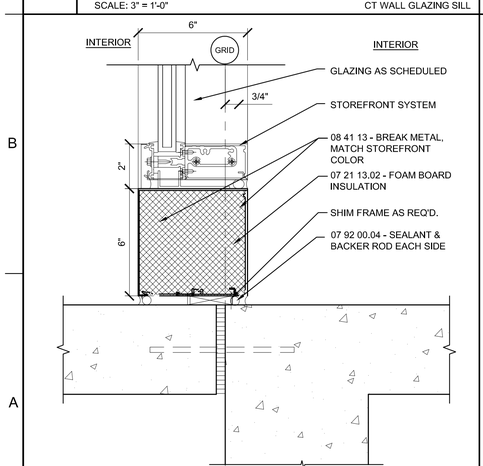


## A1 CT INTERIOR WALL GLAZING SILL

SCALE: 3" = 1'-0" CT WALL GLAZING SILL INTERIOR

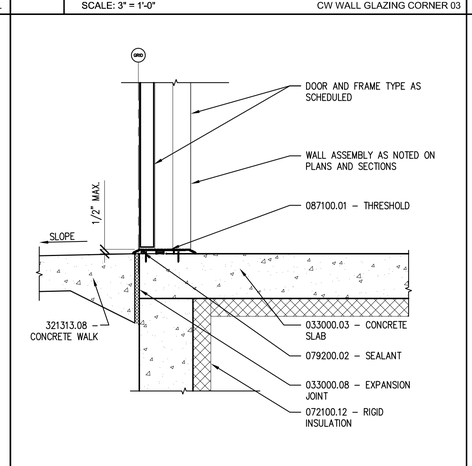


## A3 EXTERIOR THRESHOLD

SCALE: 1 1/2" = 1'-0" 1364 –EXTERIOR THRESHOLD

INTENTIONALLY LEFT BLANK

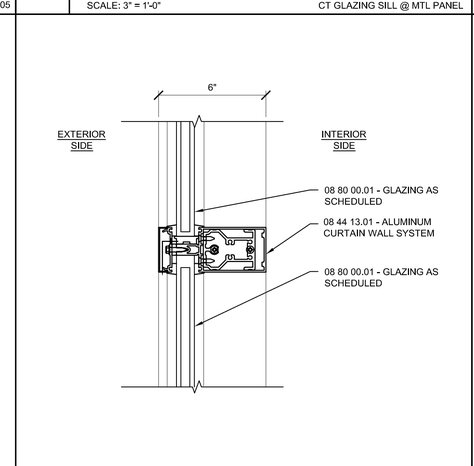


## A7 CT MULLION DETAIL

SCALE: 3" = 1'-0" CT INTERIOR MULLION

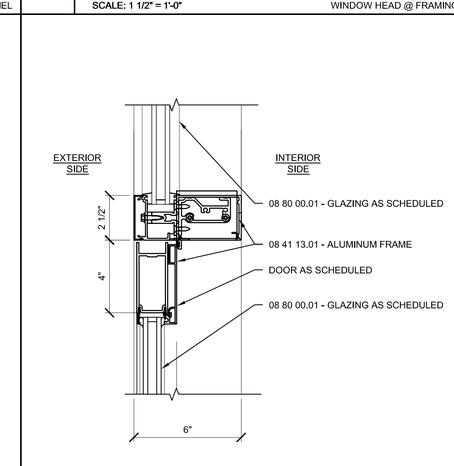


## A9 CT WALL DOOR MULLION, HEAD SIM

SCALE: 3" = 1'-0" CT DOOR MULLION

DESIGN WEST ARCHITECTS, P.A.
• MERIDIAN, IDAHO • PULLMAN, WASHINGTON •
• KENNEWICK, WASHINGTON • ONTARIO, OREGON •
www.designwestpa.com

© COPYRIGHT DESIGN WEST ARCHITECTS P.A. DESIGN CONCEPTS AND DRAWINGS NOT TO BE REUSED WITHOUT WRITTEN PERMISSION OF ARCHITECT

DRAWN BY
SG

CHECKED BY
NW

JOB NUMBER
22103

REVISIONS

STATE OF WASHINGTON
01/26/24

WSU GOLF TEAM
CLUBHOUSE UPGRADE
EXTERIOR & BLDG ADDITION
WASHINGTON STATE UNIVERSTIY
PULLMAN, WA 99163

DATE
1/26/2024

SHEET NAME
ASSEMBLIES AND DETAILS

SHEET
A8.00

Sam Gregg 1/25/2024 3:48:57 PM

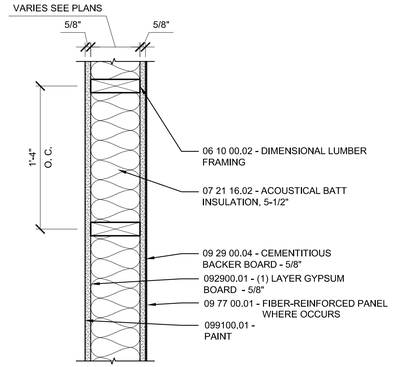


SEE STRUCTURAL FOR SHEAR WALL REQUIREMENTS WHERE SHOWN

NOTES:
1. INSTALL ALL REQUIRED BACKING PRIOR TO INSTALLATION OF GYPSUM BOARD, TYP.
2. WALL ASSEMBLY IS TO BE FULL HEIGHT TO UNDERSIDE OF DECK ABOVE U.N.O.
3. PROVIDE ACOUSTICAL SEALANT AT ENTIRE PERIMETER OF SOUND WALL ASSEMBLY (SILL, HEAD, JAMB), TYP.

## E1 INTERIOR WALL ASSEMBLY

SCALE: 1 1/2" = 1'-0" N.11

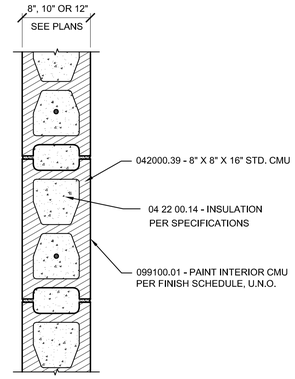


NOTES:
1. WALL ASSEMBLY IS TO BE FULL HEIGHT TO UNDERSIDE OF DECK ABOVE U.N.O.
2. GROUT CELLS SOLID PER STRUCTURAL

## E3 INTERIOR WALL ASSEMBLY

SCALE: 1 1/2" = 1'-0" N.7

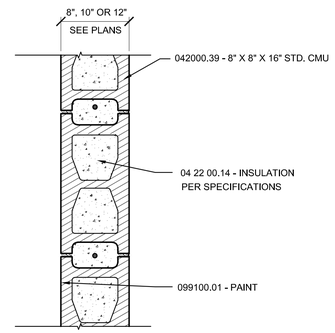


NOTES:
1. INSTALL ALL REQUIRED BACKING PRIOR TO INSTALLATION OF GYPSUM BOARD, TYP.
2. WALL ASSEMBLY IS TO BE FULL HEIGHT TO UNDERSIDE OF DECK ABOVE U.N.O.
3. PROVIDE ACOUSTICAL SEALANT AT ENTIRE PERIMETER OF SOUND WALL ASSEMBLY (SILL, HEAD, JAMB), TYP.
4. SEE STRUCTURAL FRAMING PLANS FOR SHEAR WALL LOCATIONS
5. CONTRACTOR SHALL PROVIDE CONSISTENT, FLUSH WALL FINISH. PROVIDE ADDITIONAL BACKING OR SHIMMING REQUIRED TO FLUSH ENTIRE FINISH WALL SURFACE

## E5 EXTERIOR WALL ASSEMBLY

SCALE: 1 1/2" = 1'-0" N.4

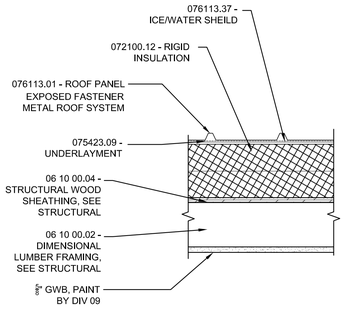


## E7 METAL ROOF ASSEMBLY

SCALE: 1 1/2" = 1'-0" ROOF 01

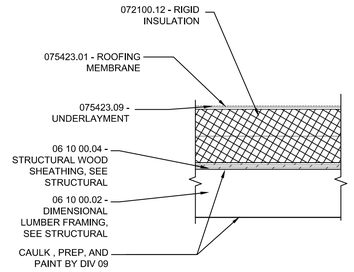


## E9 TPO ROOF ASSEMBLY

SCALE: 1 1/2" = 1'-0" ROOF 02

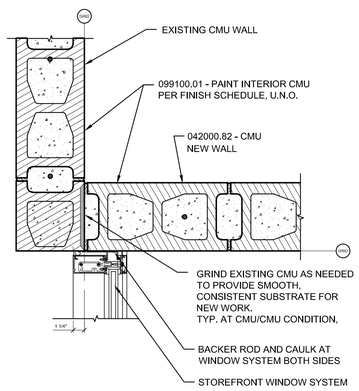


NOTES:
1. WALL ASSEMBLY IS TO BE FULL HEIGHT TO UNDERSIDE OF DECK ABOVE U.N.O.

## C1 EXISTING CMU TO NEW

SCALE: 1 1/2" = 1'-0"

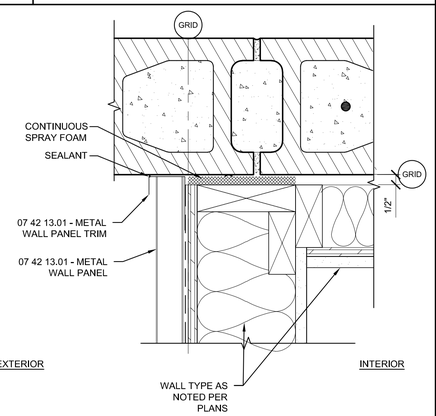


## C3 WALL AT CMU

SCALE: 1 1/2" = 1'-0" WALL CMU

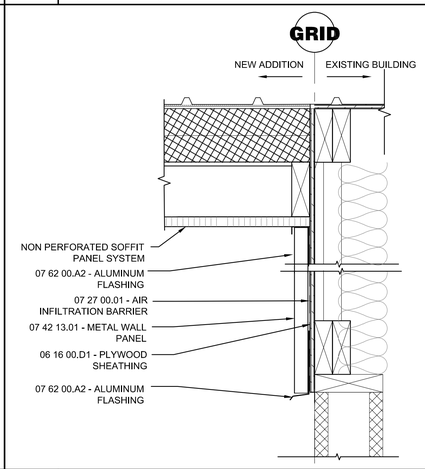


## C5 METAL WALL PANEL AT CMU

SCALE: 1 1/2" = 1'-0"

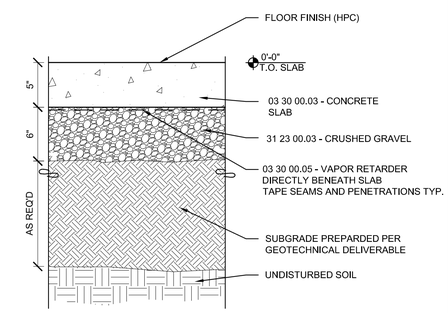


NOTES:
1. SEE STRUCTURAL FOR VARYING SLAB REINFORCEMENT AND RECESSED/RAISED LOCATIONS.
2. SEE STRUCTURAL FOR SLOPED SLAB AND FLOOR DRAIN LOCATIONS, COORDINATE WITH MECHANICAL.

## C7 SLAB ASSEMBLY

SCALE: 1 1/2" = 1'-0" SLAB ASSEMBLY 01

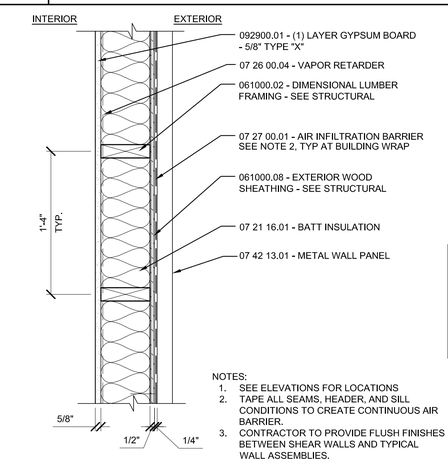


NOTES:
1. SEE ELEVATIONS FOR LOCATIONS
2. TAPE ALL SEAMS, HEADER, AND SILL CONDITIONS TO CREATE CONTINUOUS AIR BARRIER.
3. CONTRACTOR TO PROVIDE FLUSH FINISHES BETWEEN SHEAR WALLS AND TYPICAL WALL ASSEMBLIES.

## C9 EXTERIOR WALL ASSEMBLY

SCALE: 1 1/2" = 1'-0" EXTERIOR PANEL FORMED SIDING

AIR BARRIER REQUIREMENTS:
1. CONTINUOUS AIR BARRIER SHALL COMPLY WITH WSEC C402.5.1.1.
2. SEE DIVISION 07 FOR ENVELOPE BUILDING TESTING REQUIREMENTS.
3. REFERENCE SLAB, WALL, AND ROOF ASSEMBLY DETAILS FOR VAPOR/WEATHER BARRIER LOCATIONS SPECIFIC TO THIS PROJECT.

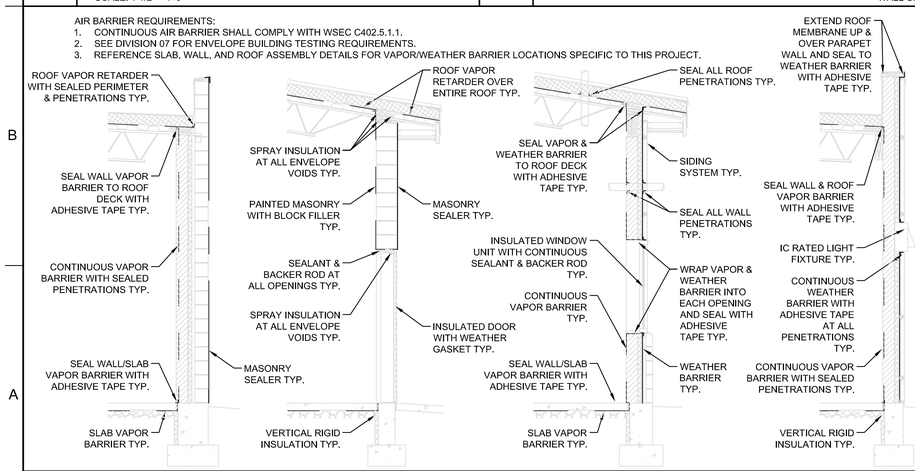


## A1 TYPICAL AIR BARRIER CONSTRUCTION

SCALE: N.T.S. AIR BARRIER

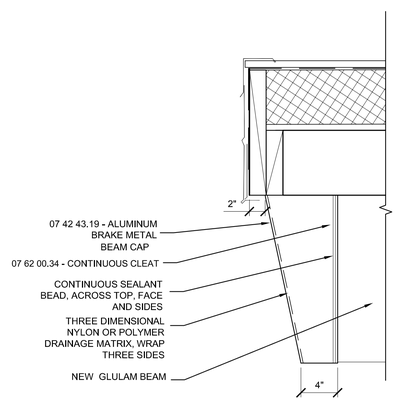


NOTE: PREPARE GLB TO ACCEPT FINISH; EXISTING BEAMS SHALL BE PAINTED, NEW BEAMS SHALL BE CLEAR COATED

## A5 GLB CAP FLASHING

SCALE: 1 1/2" = 1'-0"

NOTE:
ENSURE DISSIMILAR METALS ARE PROPERLY ISOLATED (WHERE OCCURS)

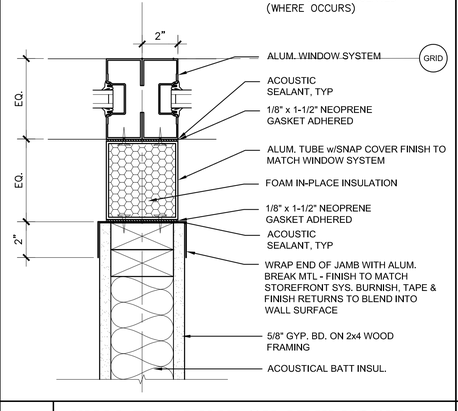


## A7 WALL TERMINATION AT WINDOW

SCALE: 3" = 1'-0" MULLION AT INT. WALL

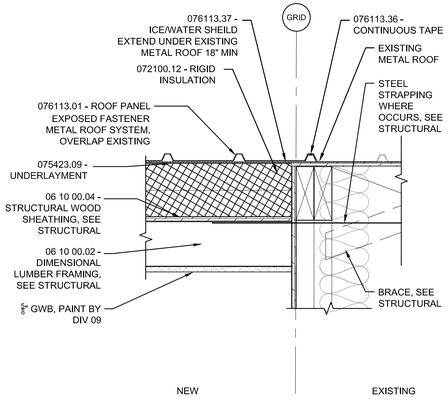


## A9 METAL ROOF TO METAL ROOF

SCALE: 1 1/2" = 1'-0" ROOF 03

DESIGN WEST ARCHITECTS, P.A.
• MERIDIAN, IDAHO • PULLMAN, WASHINGTON •
• KENNEWICK, WASHINGTON • ONTARIO, OREGON •
www.designwestpa.com

© COPYRIGHT DESIGN WEST ARCHITECTS P.A. DESIGN CONCEPTS AND DRAWINGS NOT TO BE REUSED WITHOUT WRITTEN PERMISSION OF ARCHITECT

DRAWN BY SG
CHECKED BY NW
JOB NUMBER 22103
REVISIONS

REGISTERED ARCHITECT STATE OF WASHINGTON 01/26/24

WSU GOLF TEAM CLUBHOUSE UPGRADE EXTERIOR & BLDG ADDITION
WASHINGTON STATE UNIVERSTIY
PULLMAN, WA 99163

DATE 1/26/2024

SHEET NAME
ASSEMBLIES AND DETAILS

SHEET A8.01

Sam Gregg 1/25/2024 3:45:53 PM

# GENERAL STRUCTURAL NOTES

**GENERAL**
The General Contractor shall verify all dimensions and site conditions before starting work. The Architect and Structural Engineer shall be notified of any discrepancy. Use details marked "Typical" wherever applicable. Changes, omissions or substitutions are not permitted without written approval of the Architect and Structural Engineer.
Refer to specifications for further requirements. In the case of conflicts between plans and specifications, the more restrictive requirements shall apply. Any discrepancies on the Contract Documents should be brought to the attention of the Architect and Structural Engineer prior to proceeding with the work.

All materials and workmanship shall conform to the 2018 edition of the International Building Code (IBC) and the 2016 edition of "Minimum Design Loads for Buildings and Other Structures" by the American Society of Civil Engineers. Use the latest edition of Referenced Standards as noted in Chapter 35 of the IBC.

The Contract structural drawings represent the finished structure. The Contractor is responsible for the means, methods and sequence of construction. The design, adequacy and safety of erection bracing, shoring, temporary supports, etc., is the sole responsibility of the Contractor, and has not been considered by the Structural Engineer. The Contractor is responsible for the stability of the structure prior to the completion of all shear walls, roof and floor diaphragms and finish materials. The Contractor shall provide the necessary bracing to provide stability to the structure prior to the installation of the permanent lateral force resisting system. Observation visits to the site by the Structural Engineer shall not include inspection of temporary bracing, shoring, etc.

The Contractor shall coordinate the size and locations of all openings in roofs, floors and walls. Openings shall not penetrate any structural elements such as beams, columns, walls, slabs, etc. unless noted on the drawings or approved by the Structural Engineer.

**EXISTING CONSTRUCTION**
Existing structural dimensions and member sizes are for reference only. The contractor shall field verify all dimensions, member sizes, and existing conditions prior to the commencement of new work and modifications to existing construction. Notify the Architect and Structural Engineer of any discrepancies and unsound conditions found.

**DEFERRED SUBMITTALS**
Items designed by a Specialty Structural Engineer shall be submitted to the Architect and Structural Engineer for review and shall bear the seal and signature of an engineer registered in the state of Washington. Submittals shall include calculations, design drawings, product data and shop drawings. Design shall be based on information provided on the drawings for gravity, wind and seismic forces unless noted otherwise.

The Contractor shall coordinate the seismic restraint of mechanical, plumbing and electrical equipment and the associated piping to the structure. Connections to the structure shall conform to SMACNA standards, be detailed on the contract drawings or be designed by an engineer registered in the state of Washington and submitted for Architect and Structural Engineer review prior to fabrication.

**SHOP DRAWINGS**
Shop drawings are to be checked and approved by the General Contractor prior to submitting for Architect and Structural Engineer review. General Contractor is responsible for verification and coordination of dimensions and details for each Subcontractor. Quantities and dimensions are not reviewed by the Structural Engineer and therefore must be verified by the General Contractor. No fabrication shall proceed until shop drawings have been approved. Review of the Specialty Structural Engineer's design submittals and shop drawings is for general compliance with design criteria and compatibility with the design of the primary structure and does not relieve the Specialty Structural Engineer of responsibility for that design.

**DESIGN LOADS**
Building Risk Category ---------- II

**Snow Loading**
Ground Snow Load, $P_g$ ---------- 30 PSF
Flat Roof Snow Load, $P_f$ ---------- 28 PSF + Drifting
Snow Exposure Factor, $C_e$ ---------- 1.1
Thermal factor, $C_t$ ---------- 1.1
Snow Load Importance Factor, $I_s$ ---------- 1.0

**Wind Loading**
Basic Wind Speed (3-second gust)---------- 110 MPH
Wind Exposure ---------- C
Wind Importance Factor, $I_w$ ---------- 1.0
Enclosure Classification ---------- Enclosed

**Seismic Loading - Equivalent Lateral Force Procedure**
Seismic Importance Factor, $I_E$ ---------- 1.0
Spectral Response Accelerations ---------- $S_S$ = 0.295 $S_1$ = 0.107
Site Class ---------- D (default)
Seismic Design Category---------- C
Site Coefficient $F_a$ ---------- 1.564
Site Coefficient $F_v$ ---------- 2.386
Spectral Response Coefficients ---------- $S_{DS}$ = 0.308 $S_{D1}$ = 0.170
Basic Seismic Force-Resisting System --- CLT Shear Panels
Response Modification Factor, R ---------- 1.5
Seismic Response Coefficient, $C_S$ ---------- 0.205 (LRFD)

**FOUNDATION**
Assumed allowable soil bearing pressure = 1,500 PSF per IBC Table 1806.2. Bottom of all footings to bear on native, inorganic, undisturbed soil 1'-0" minimum below existing grade. Extend all exterior footings 2'-6" minimum below finished grade. No footing shall bear higher than a 1 vertical to 1.5 horizontal slope above any excavation, existing or planned. Contractor shall provide temporary shoring to prevent movement of walls if backfill is placed before floor system is in place. Site preparation, grading, backfilling, etc. shall be as recommended by the geotechnical report. There shall be 95% compaction (ASTM D1557 Modified Proctor Density) of all backfill soil under slabs on grade.

**CAST-IN-PLACE CONCRETE**
Concrete mix proportions in accordance with ACI 301 to meet or exceed the requirements as listed below:

| | Minimum 28 Day Compressive Strength | Maximum Air Entrainment | Maximum Size Aggregate | Maximum Water/Cement Ratio |
|---|---|---|---|---|
| All structural conc, UNO | 3000 PSI | None | 3/4" | |
| Footings | 3000 PSI | None | 1-1/2" | |
| Foundation stem walls | 3000 PSI | 5% | 3/4" | |
| Interior slab on grade | 4000 PSI | None | 3/4" | .50(*) |
| Exterior slab on grade | 4500 PSI | 6% | 3/4" | .45 |

**Maximum Slump:** 3" for slabs and footings; 4" for walls, columns and beams. Slumps given are for un-plasticized concrete. Larger slumps may be allowed through the use of a super plasticizer.
Construction to be in accordance with the latest edition of ACI 318, "Part 6: Materials & Durability", "Part 8: Reinforcement" and "Part 9: Construction".
Location of construction or pour joints for walls, beams, columns, and structural slabs must be approved by the Structural Engineer if different from that shown on plans.
(*) Use a maximum water/cement ratio of 0.45 for interior slabs on grade that could be subject to freeze/thaw cycling while saturated during the construction period.

**CONCRETE SLABS ON GRADE**
The General Contractor shall control and monitor construction procedures and conditions as required to provide a high quality finished slab with minimal cracks, curling, and surface defects. Procedures and conditions under the control of the General Contractor include, but are not limited to: provisions for ambient weather conditions, curing methods selected, rate of placement, joint arrangement and installation, temperature control, subgrade preparation, and reinforcing placement (where indicated).
**Placement on Vapor Barrier**: Slabs poured directly on vapor barrier are intended to facilitate vapor-emission rates frequently required for floor covering installation.
Concrete cure time may be longer than for slabs not in direct contact with vapor barrier; General Contractor to coordinate curing and floor covering installation requirements as required.
**Slab Finishes**: Concrete slabs on grade shall be provided with finish techniques in accordance with the floor classification table of ACI 302.1R. Intended use for interior slabs shall be categorized as either Class 2, Class 4, or Class 5, unless noted otherwise. See architectural drawings for required floor finishes.
**Slab Joints:** Except where specifically indicated, joint spacing and arrangement is to be determined by the General Contractor as part of slab installation procedure. A proposed joint layout plan shall be submitted for architect and engineer approval prior to slab pour. In general, apply the following parameters:
Maximum joint spacing, subject to factors above:
Typical, UNO: 36 times slab thickness
Exposed & polished slabs: 24 times slab thickness
Maximum aspect ratio between joints: 1.5 to 1
Avoid re-entrant corners

**POLISHED OR HONED CONCRETE SLABS ON GRADE**
The General Contractor shall comply with all provisions noted above, plus additional requirements listed here. Crack control and minimization is imperative at all polished slab areas.
**Concrete Mix:** Fly ash, water vapor reducing admixtures, and air entraining admixtures are not to be included in the mix design. Maximum cement content shall be 517# per cubic yard (5.5 sack mix). Mix design shall provide for maximum curing shrinkage of 0.0003" per inch.
**Slab Joints:** A proposed joint-layout plan shall be submitted for architect and engineer approval prior to slab pour. Reference the architectural drawings for preferred joint locations, and follow joint parameters noted above for standard slabs on grade.

**MASONRY**
**Design Compressive Strength:** CMU masonry $f'_m$ = 2000 PSI at 28 days.
**Concrete Masonry Units:** ASTM C90-14, medium weight(115 pcf), running bond.
Minimum compressive strength = 2000 PSI.
**Mortar:** ASTM C270, Type S, with a minimum compressive strength of 1800 PSI at 28 days.
**Grout:** ASTM C476 with a minimum compressive strength of 2000 PSI at 28 days with a maximum aggregate size of 3/8". Fill all cells containing reinforcing with grout in lifts not exceeding 5'-4" in height. Stop each grout lift 1 ½" below the top course in the lift except at the top of the wall. Fill other cells with grout as indicated on drawings. Unless noted otherwise, lap all bar splices 48 diameters minimum. All reinforcement shall be in place prior to grouting with vertical bars held at top, bottom and 192 diameters maximum on center. Contractor shall provide temporary bracing for masonry walls, as required, until connections to floor and/or roof diaphragms are completed.

**REINFORCING STEEL**
**Welded Wire Fabric:** ASTM A1064, Fy = 65 KSI supplied in flat sheets and lapped a minimum of 12" on all sides.
**Deformed Welded Wire Fabric:**
ASTM A1064, Fy = 70 KSI supplied in flat sheets and lapped a minimum of 12" on all sides.
**Deformed Bars:** ASTM A615, Grade 60.
**Weldable Deformed Bars:** ASTM A706, Grade 60 for #4 and larger.
Securely tie in place with double annealed 16 gauge iron wire or approved clips. Provide chairs, bolsters, etc. to place reinforcement in the proper positions as indicated on the drawings.
**Concrete Cover:** Unless noted otherwise on these drawings, provide clear cover at reinforcing bars as follows:
Concrete cast against soil = 3".
Formed concrete against soil = 2".
Walls, columns and beams exposed to weather = 2".
Walls, columns and beams not exposed to weather = 1½".
Slab on grade = 2".
Detailing of concrete reinforcement bars and accessories shall conform to the recommendations of ACI 315 "Details and Detailing of Concrete Reinforcement" and ACI SP-66 "Detailing Manual". Placing of reinforcement shall conform to ACI 315R "Manual of Engineering and Placing Drawings for Reinforced Concrete Structures" and CRSI "Manual of Standard Practice". Reinforcement bars shall not be tack welded, heated, or cut unless specifically detailed on the drawings or as approved by the Structural Engineer. The welding of reinforcing steel, metal inserts and connections in reinforced concrete shall conform to AWS D1.4 "Structural Welding Code - Reinforcing Steel" by AWS/WABO certified welders using E9018 or approved electrodes. Submit mill test report of material properties to determine carbon equivalent and minimum preheat temperatures.
ASTM A706 reinforcement may be substituted for A615 reinforcement.
Submit shop drawings of reinforcing steel for review by the Architect and Structural Engineer prior to fabrication. All wall reinforcement shop drawings shall be shown in elevation.

**STRUCTURAL AND MISCELLANEOUS STEEL**
**C & L Shapes, plates and bars:** ASTM A36, Fy = 36 KSI
**Wide Flange & WT Shapes:** ASTM A992, Fy = 50 KSI
**Square & Rectangular HSS:** ASTM A500, Grade C, Fy = 50 KSI
**Round HSS:** ASTM A500, Grade C, Fy = 50 KSI
**Hillside washers:** ASTM A48, Grade 30 hot dipped galvanized per ASTM F2329
**Bolts:** ASTM A307 machine bolts (MB).
**Anchor Rods (AR):** Headed or threaded rod with heavy hex nut, ASTM F1554, Fy = 36 KSI with A563C (A563DH for galvanized) heavy hex nuts and F436-1 washers.
**Anchor Bolts (AB):** Headed A307, Grade A or hooked ASTM A36.
**Threaded rod:** ASTM A36, Fy = 36 KSI.
**Headed anchor stud (HAS):** ASTM A108 Type A, Fy = 49 KSI for general use and Type B, Fy = 51 KSI for composite steel-concrete construction. Headed anchor studs shall be end welded per manufacturer's recommendations.
**Deformed bar anchors (DBA):** ASTM A1064, Fy = 70 KSI, end welded per manufacturer's recommendations.
**Threaded Anchor Stud (TAS):** ASTM A108, Fy = 49 KSI, end welded per manufacturer's recommendations.
**Welding electrodes or wires:** AWS A5.1 or A5.5, E70XX; AWS A5.18, E70S-X; AWS A5.20, E7XT-X.
**Non-shrink Grout:** *"Masterflow 928" as manufactured by BASF Building Systems or approved equal with a minimum compressive strength of 5000 PSI.*
Erection and fabrication in accordance with *AISC 360 "Specification for Structural Steel Buildings", AISC 341 "Seismic Provisions for Structural Steel Buildings", and AISC 303 "Code of Standard Practice for Steel Buildings and Bridges"*. Welding shall conform to AWS D1.1 "Standard Welding Code - Steel". All welding shall be performed by AWS/WABO Certified Welders whose certification meets "AWS Standards" in an approved fabricator shop or where Special Inspection is provided. All columns and beams to be from unspliced lengths unless noted otherwise on the drawings. All members to have "Standard" size holes unless noted as short-slotted (SSL) or long-slotted (LSL). Enlargement of holes by burning is not permitted. Masonry veneer lintel angles shall be hot-dipped galvanized with a minimum zinc coating of 1.5 ounces per square foot of surface area. Submit shop drawings showing sizes, dimensions and required connection details for review by the Architect and Structural Engineer prior to fabrication.

**WOOD**
**Sawn Lumber:** Douglas Fir-Larch S-Dry 19% MC, WWPA 2017 Western Lumber grading rules furnished to the following minimum standards:

| | | |
|---|---|---|
| Studs | 2x4 | Standard or better |
| | 2x6 | #2 or better |
| Joist & Rafters | 2x, 3x, 4x widths 6" to 14" deep | #2 or better |
| Top & Sill Plates | 2x width | #2 or Construction Grade |
| Beams & Stringers | 6x widths & larger | #1 or better |
| Posts and Timbers | 6x widths & larger | #1 or better |
| T&G Decking | 2x, 3x, 4x widths | Selected Grade |
| Treated Framing | 2x, 3x, 4x widths | Hem-Fir #2 or better |

All wood bearing on concrete or masonry, if less than 4'-0" above grade, shall be preservative treated.
Structural members shall not be cut for pipes, ducts, etc., unless specifically noted or detailed.
**Glu-laminated members:** All members shall conform to the latest edition of AITC 117 *"Design Standard Specifications for Structural Glued Laminated Timber of Softwood Species"*.
**Simple span beams**: Stress Class 24F-1.8E Combination Symbol 24F-V4
**Continuous beams:** Stress Class 24F-1.8E Combination Symbol 24F-V8
**Cantilever beams:** Stress Class 24F-1.8E Combination Symbol 24F-V8
**Compression members:** Combination Symbol 2
**Tension members:** Combination Symbol 3
Shop Drawings of glu-laminated members to be submitted for review by the Architect and Structural Engineer prior to fabrication.
**Roof Sheathing:** 5/8" (19/32" minimum) APA rated sheathing, Exposure 1, PRP-108, ESR-2586, Span Rating 40/20. Provide tongue & groove edges, ply clips, or blocking at all panel edges where roof slopes are less than 2:12, or spacing of support framing exceeds 32" oc, or where noted on the drawings. Lay sheathing with face grain perpendicular to supports continuous over 2 or more spans with end joints staggered. Allow 1/8" spacing at panel ends and edges. Attach to framing with 8d @ 6" oc at panel edges and 12" oc at intermediate supports unless noted otherwise.
**Wall Sheathing:** 1/2" (15/32" minimum) APA rated sheathing, Exposure 1, PRP-108, ESR-2586, Span Rating of 24/0. Provide solid blocking at all panel edges. Lay sheathing with face grain perpendicular to supports continuous over 2 or more spans. Allow 1/8" spacing at panel ends and edges. Attach to framing with 8d @ 6" oc at panel edges and 12" oc at intermediate supports unless noted otherwise.
**Framing anchors and connectors:** *"Simpson"* or approved equal as indicated on drawings.
Install per manufacturer's recommendations. Bolt heads and nuts in contact with wood shall have washers.
For nailing not shown on drawings, use IBC Fastening Schedule, Table 2304.10.1. Nails shall not be overdriven.
**Preservative-Treated Wood:** All preservative-treated wood (PT) and fire-treated wood (FT) shall be treated in compliance with the American Wood Protection Association (AWPA) standard U1-09. The AWPA Use Category System (UCS) shall be used to determine an appropriate AWPA-approved preservative system and retention level for specific commodities and end-uses. Unless otherwise specified, species and retention levels used in the preservative system shall be compliant with those listed in Section 6 of AWPA-U1-09. Treatments CCA-C, ACQ-A, and ACQ-B are prohibited. All framing hardware, connectors, etc. in contact with treated wood shall be galvanized per ASTM A653 or stainless steel. All framing hardware fasteners into treated wood shall be galvanized per ASTM A153 or stainless steel.

**POST-INSTALLED ANCHORS**
All post-installed anchors shall have current ICC ESR Reports indicating code-approved installation requirements. Contractor shall comply with all requirements of the ESR report. Substitution of post-installed anchors for anchor bolts, anchor rods, or rebar dowels is not allowed without written approval of the Structural Engineer. Special Inspection is required for all post-installed anchors. Special Inspection for Contractor-requested substitutions (if approved) shall be provided at no additional cost to the Owner.
**Adhesive Anchors (AA) in Concrete:** ASTM A307, Grade C threaded rod with Simpson SET-XP adhesive or Hilti "HAS-E" threaded rod or Grade C threaded rod with HIT-HY 200 adhesive or approved equal. Concrete to have aged a minimum of 21 days prior to installation.
**Adhesive Dowels (AD) in Concrete:** ASTM A615 deformed bar with Simpson SET-XP adhesive or Hilti HIT-HY 200 adhesive or approved equal. Concrete is to have aged a minimum of 21 days prior to anchor installation.
**Adhesive Anchors (AA) in Solid-Grouted Concrete Masonry:** ASTM F1554, Grade 36 threaded rod with Simpson SET-XP adhesive or Hilti "HIS" threaded rod or Grade C threaded rod with HIT-HY 270 adhesive or approved equal.
**Adhesive Anchors (AA) in Hollow Concrete Masonry:** ASTM F1554, Grade 36 threaded rod with Simpson SET-XP adhesive in screen tube or Hilti "HIT-IC" threaded rod with HIT-HY 270 adhesive inHIT-SC screen tube or approved equal.
**Expansion Bolts (EB) in Concrete:** Simpson Strong Bolt 2 or Hilti Kwik Bolt TZ or approved equal.
**Expansion Bolts (EB) in Solid-Grouted Concrete Masonry:**
Simpson Wedge-All or Hilti Kwik Bolt 3 or approved equal.
**Screw-in Anchors (SA) in Concrete:** Simpson Titen HD or Hilti KWIK HUS-EZ or approved equal.
**Powder Actuated Fasteners (PAF) into Concrete:** Hilti X-U(.157" dia) fasteners with a minimum embedment of ¾" (1" length) into concrete of a minimum 3" thickness. Do not install PAF fasteners until concrete has attained specified 28 day design strength.
**Powder Actuated Fasteners (PAF) into Steel:** Hilti X-U 15 (.145" dia) fasteners into steel of a minimum 3/16" thickness.

**QUALITY ASSURANCE and SPECIAL INSPECTIONS**
A qualified special inspector(s) shall be engaged by the Owner or Owner's representative to conduct continuous and periodic inspections as tabulated on sheet S1.02. Construction activity shall be coordinated with required inspections and testing requirements by the Contractor. Construction deficiencies identified by the special inspection process shall be remedied by the Contractor at no cost to the Owner.

DESIGN WEST ARCHITECTS, P.A.
• MERIDIAN, IDAHO • PULLMAN, WASHINGTON •
• KENNEWICK, WASHINGTON • ONTARIO, OREGON •
www.designwestpa.com
© COPYRIGHT DESIGN WEST ARCHITECTS P.A. DESIGN CONCEPTS AND DRAWINGS NOT TO BE REUSED WITHOUT WRITTEN PERMISSION OF ARCHITECT

DRAWN BY CJC
CHECKED BY LAH
JOB NUMBER 22103
REVISIONS

LSB CONSULTING ENGINEERS
523 EAST THIRD AVENUE
SPOKANE, WA 99202
P 509.323.9292
F 509.747.7115

LAWRENCE A. HARRIS · STATE OF WASHINGTON · 31650 · REGISTERED PROFESSIONAL ENGINEER
12/20/23

WSU GOLF TEAM
CLUBHOUSE UPGRADE
EXTERIOR & BLDG ADDITION
WASHINGTON STATE UNIVERSTIY
PULLMAN, WA 99163

DATE 01/26/2024
SHEET NAME GENERAL STRUCT NOTES
SHEET S1.01

Harris, 1/20/2024 8:50:05 AM

# SPECIAL INSPECTIONS & TESTING

**GENERAL**
The Owner or the Owner's agent shall employ an approved agency to perform inspections and testing during construction in accordance with IBC sections 1704, 1705 and 1707 and the Statement of Special Inspections below. These inspections are in addition to the inspections required per IBC section 110.

Special Inspectors shall be qualified persons with experience in the types of construction being inspected.
Special Inspectors shall provide written documentation of *WABO* or equivalent certification acceptable to the Agency Having Jurisdiction.

Off-site work and fabrications do not require special inspection if the fabricator is registered and approved to perform such work by the Agency Having Jurisdiction. Approval is based on the fabricator's written procedures and quality control programs.

**CONTRACTOR RESPONSIBILITIES**
The Contractor shall provide reasonable access to all work requiring special inspection and notify the Inspection Company in sufficient time to schedule such inspections. A copy of all Special Inspection reports shall be maintained at the job site and made available upon request to the Authority Having Jurisdiction and the project Engineer of Record.

**STATEMENT OF SPECIAL INSPECTION**
Special inspection to be provided per IBC 1705 for materials, systems, components and work performed are as follows:

Freq = Frequency
Req = Required
C = Continuous Special Inspection
P = Periodic Special Inspection

**SOILS AND FOUNDATION**
Provide Special Inspection for the following to determine compliance with the Geotechnical Report and the Construction Documents:

| SOILS AND FOUNDATION | | | | |
|---|---|---|---|---|
| | System or Material | Code Reference | Freq | Req |
| 1. | Verify Footing Bearing Capacity | IBC 1705.6 | P | X |
| 2. | Verify Excavations are to proper depth and have reached proper material | IBC 1705.6 | P | X |
| 3. | Classification and Testing of Compacted Fill Materials | IBC 1705.6 | P | X |
| 4. | Prior to the placement of Compacted Fill, observe subgrade and verify the site has been prepared properly | IBC 1705.6 | P | X |
| 5. | Verify use of proper materials, densities and lift thicknesses during placement and compaction of fill | IBC 1705.6 | C | X |

| CONCRETE | | | | |
|---|---|---|---|---|
| | System or Material | Code Reference | Freq | Req |
| 1. | Inspect reinforcing steel and verify placement | ACI 318 Chap 20, 25.2, 25.3, 26.6.1-26.6.3, IBC 1908.4 | P | X |
| 2. | Cast-in-Place anchors in concrete | ACI 318 17.8.2 | P | X |
| 3. | Verify use of required mix designs | ACI 318 19, 26.4.3 & 26.4.4<br>IBC 1904.1, 1904.2, 1908.2, 1908.3 | P | X |
| 4. | Sampling of fresh concrete for strength tests, slump and air content tests and to determine temperature of the concrete | ACI 318 26.5 & 26.12<br>ASTM C172 & C31, IBC 1908.10 | C | X |
| 5. | Inspect concrete and shotcrete placement for proper application techniques | ACI 318 26.5 & 26.13.3.2(a)<br>IBC 1908.6,1908.7 & 1908.8 | C | X |
| 6. | Verify maintenance of specified curing temperature and techniques | ACI 318 26.5.3 -26.5.5<br>IBC 1908.9 | P | X |
| 7. | Inspect prestessed concrete for application of prestressing forces & grouting of bonded tendons | ACI 318 26.10 & 26.13.3.2 | C | |
| 8. | Inspect erection of precast concrete members | ACI 318 26.9 & 26.13.3.3 | P | |
| 9. | Verification of in-situ concrete strength prior to stressing tendons in post-tensioned concrete | ACI 318 26.11.2 | P | |
| 10. | Verification of in-situ concrete strength prior to removal of forms and shores from elevated beams and slabs | ACI 318 26.11.2 | P | |
| 11. | Inspect formwork for shape, location and dimensions of the member being formed | ACI 318 26.11.1.2(b) | P | |
| 12. | Placement of Reinforcing steel & Concrete in Special Moment Frames | ACI 318 18.2.5, 18.2.6, 26.13 | C | |
| 13. | Placement of Reinforcing steel & Concrete in Special Shear Walls | ACI 318 18.2.5, 18.2.6, 26.13 | C | |
| 14. | Concrete Placement for composite slabs | AISC 341 J9 | C | |
| 15. | Stressing of Tendons in Post-tensioned concrete | ACI 318 26.10.2 & 26.13.3.2 | C | |
| 16. | **Post-Installed Anchors In Hardened Concrete** | | | |
| a. | Adhesive anchors installed horizontally or upwardly inclined and resisting sustained tension loads | ACI 318 17.8.2.4, ICC Report | C | X |
| b. | Mechanical anchors and other adhesive anchors | ACI 318 17.8.2, ICC Report | P | X |

| WOOD | | | | |
|---|---|---|---|---|
| | System or Material | Code Reference | Freq | Req |
| 1. | Fabrication of prefabricated structural elements | IBC 1704.2.5 | P | X |
| 2. | Prefabricated Wood Shear Walls | IBC 2306.3 & ICC Report | P | X |
| 3. | Fabrication of high-load diaphragms:<br>- Verify panel grade and thickness.<br>- Verify nominal size of framing members at adjoining panel joints.<br>- Verify nail or staple diameter and length, number of fastener lines and spacing between fasteners at each line and at edge margins. | IBC 1705.5.1 & 2306.2 | P | |
| 4. | Verification of the installation of temporary and permanent restraint bracing for individual trusses spanning 60' or greater | IBC 1705.5.2 | P | |

| MASONRY - LEVEL 2 | | | | |
|---|---|---|---|---|
| | System or Material | Code Reference | Freq | Req |
| 1. | Compliance with approved submittals | TMS 602-16 Section 1.5 | P | X |
| 2. | Verify f'm prior to construction | TMS 602-16 Section 1.4B | P | X |
| 3. | Observe preparation of grout and mortar specimens and/or prism | TMS 602-16<br>Section 1.4B.2.a.3, 1.4B.2.b.3, 1.4B.2.c.3, 1.4B.3, 1.4B.4 | P | X |
| 4. | **Verify as Masonry Construction Begins** | | | |
| a. | Sample panel construction | TMS 602-16 Section 1.6D | P | X |
| b. | Proportions of site-prepared mortar | TMS 602-16 Section 2.1, 2.6A | P | X |
| c. | Construction of mortar joints | TMS 602-16 Section 3.3B | P | X |
| 5. | **Verify Prior to Grouting** | | | |
| a. | Grout space | TMS 602-16<br>Section 3.2D & 3.2F | P | X |
| b. | Grade, type and size of reinforcement, connectors and anchor bolts | TMS 602-16 Section 3.4 & 3.6A | P | X |
| c. | Placement of reinforcement, connectors and anchor bolts | TMS 602-16 Section 3.2E & 3.4<br>TMS 402-16 Section 6.1, 6.3.1, 6.3.6 & 6.3.7 | P | X |
| d. | Proportions of site-prepared grout | TMS 602-16 Section 2.6B | P | X |
| e. | Construction of mortar joints | TMS 602-16 Section 3.3B | P | X |
| 6. | **Verify During Construction** | | | |
| a. | Slump Flow and Visual Stability Index | TMS 602.16<br>Section 1.5 & 1.6.3 | P | X |
| b. | Size and location of structural elements | TMS 602-16 Section 3.3F | P | X |
| c.. | Type, size and location of anchors and details of anchorage of masonry to structural members, frames or other construction | TMS 402-16<br>Section 1.2.1(e), 6.2.1 & 6.3.1 | P | X |
| d. | Preparation, construction, and protection of masonry during cold weather (below 40 degrees) or hot weather (above 90 degrees) | TMS 602-16<br>Section 1.8C & 1.8D | P | X |
| e. | Placement of grout | TMS 602-16 Section 3.5 | C | X |

| SPECIAL INSPECTIONS FOR SEISMIC RESISTANCE | | | | |
|---|---|---|---|---|
| | System or Material | Code Reference | Freq | Req |
| 1. | **Structural Wood** | | | |
| a. | Field gluing of diaphragm and shear wall elements of the seismic force resisting system | IBC 1705.12.2 | C | |
| b. | Nailing, bolting, anchoring and other fastening of elements of the seismic force resisting system including shear walls, diaphragms and chords, collectors, braces, shear wall anchorage and holdowns (not required when fastener spacing of sheathing is > 4") | IBC 1705.12.2 | P | X |

# ABBREVIATIONS

| | |
|---|---|
| AA | ADHESIVE ANCHOR |
| AB | ANCHOR BOLT |
| AD | ADHESIVE DOWEL |
| ADDL | ADDITIONAL |
| AFF | ABOVE FINISH FLOOR |
| ALT | ALTERNATE |
| & | AND |
| APPROX | APPROXIMATE |
| AR | ANCHOR ROD |
| ARCH | ARCHITECT |
| ARCHL | ARCHITECTURAL |
| @ | AT |
| B.O. | BOTTOM OF |
| BOT | BOTTOM |
| BLDG | BUILDING |
| BLKG | BLOCKING |
| BM | BEAM |
| BO | BOTTOM OF |
| BRG | BEARING |
| BSMT | BASEMENT |
| BTWN | BETWEEN |
| C | CHANNEL |
| CB | CARRIAGE BOLT |
| CDF | CONTROLLED DENSITY FILL |
| CL OR ℄ | CENTERLINE |
| CLG | CEILING |
| C-C | CENTER TO CENTER |
| CF | CUBIC FEET |
| CIP | CAST-IN-PLACE |
| CJ | CONTROL JOINT |
| CLR | CLEAR |
| CMU | CONCRETE MASONRY UNIT |
| CNTRD | CENTERED |
| COL | COLUMN |
| CONC | CONCRETE |
| CONN | CONNECTION |
| CONSTR | CONSTRUCTION |
| CONT | CONTINUOUS |
| CONTR | CONTRACTOR |
| CTSK | COUNTERSINK |
| CTR | CENTER |
| CY | CUBIC YARD |
| DBA | DEFORMED BAR ANCHOR |
| DBL | DOUBLE |
| DEG | DEGREE |
| DIAG | DIAGONAL |
| DIA | DIAMETER |
| DIM | DIMENSION |
| DL | DEAD LOAD |
| DN | DOWN |
| DP | DEEP |
| DTL | DETAIL |
| DWG | DRAWING |
| DWL | DOWEL |
| (E) | EXISTING |
| EA | EACH |
| EB | EXPANSION BOLT |
| EF | EACH FACE |
| EJ | EXPANSION JOINT |
| ELEV | ELEVATION |
| EMBED | EMBEDMENT |
| EN | EDGE NAIL |
| ENGR | ENGINEER |
| EQ | EQUAL |
| EW | EACH WAY |
| EXP | EXPANSION |
| EXIST | EXISTING |
| EXTR | EXTERIOR |
| FD | FLOOR DRAIN |
| FDN | FOUNDATION |
| FIN | FINISH |
| FLR | FLOOR |
| FN | FIELD NAIL |
| FO | FACE OF |
| FOC | FACE OF CONCRETE |
| FRG | FRAMING |
| FS | FAR SIDE |
| FT | FEET |
| FTG | FOOTING |
| GA | GAGE |
| GALV | GALVANIZE |
| GL | GLUED LAMINATED |
| GR | GRADE |
| GWB | GYPSUM WALLBOARD |
| H | HORIZONTAL |
| HAS | HEADED ANCHOR STUD |
| HDR | HEADER |
| HORIZ | HORIZONTAL |
| HSB | HIGH STRENGTH BOLT |
| HSS | HOLLOW STRUCTURAL SECTION |
| HT | HEIGHT |
| HWH | HEX WASHER HEAD |
| ID | INSIDE DIAMETER |
| I.F. | INSIDE FACE |
| IN | INCH(ES) |
| INTR | INTERIOR |
| JST | JOIST |
| JT | JOINT |
| JB | JOIST BEARING |

| | |
|---|---|
| K | KIP |
| KSF | KIPS PER SQUARE FOOT |
| L OR ∠ | ANGLE |
| LBS | POUNDS |
| LL | LIVE LOAD |
| LLBB | LONG LEGS BACK TO BACK |
| LLH | LONG LEG HORIZONTAL |
| LLV | LONG LEG VERTICAL |
| LNTL | LINTEL |
| LONG | LONGITUDINAL |
| LSL | LONG SLOTTED |
| LVL | LAMINATED VENEER LUMBER |
| MAS | MASONRY |
| MAX | MAXIMUM |
| MB | MACHINE BOLT |
| MECH | MECHANICAL |
| MEZZ | MEZZANINE |
| MFR | MANUFACTURER |
| MIN | MINIMUM |
| MISC | MISCELLANEOUS |
| ML | MICROLLAM |
| MO | MASONRY OPENING |
| MTL | METAL |
| # OR NO. | NUMBER |
| NIC | NOT IN CONTRACT |
| NOM | NOMINAL |
| NS | NEAR SIDE |
| NTS | NOT TO SCALE |
| OC | ON CENTER |
| OD | OUTSIDE DIAMETER |
| O.F. | OUTSIDE FACE |
| OH | OVERHEAD |
| O-O | OUT TO OUT |
| OPNG | OPENING |
| OPP | OPPOSITE |
| PAF | POWDER ACTUATED FASTENER |
| PC | PRECAST |
| PL OR ℙ | PLATE |
| PLF | POUNDS PER LINEAL FT |
| PCF | POUNDS PER CUBIC FT |
| PLYWD | PLYWOOD |
| PLCS | PLACES |
| PSF | POUNDS PER SQ FT |
| PSI | POUNDS PER SQ IN |
| PSL | PARALLAM |
| PT | PRESSURE TREATED |
| RAD | RADIUS |
| R | RISER |
| REINF | REINFORCEMENT |
| REF | REFERENCE |
| REQD | REQUIRED |
| REQMTS | REQUIREMENTS |
| REV | REVISION |
| RO | ROUGH OPENING |
| RM | ROOM |
| SA | SCREW-IN ANCHOR |
| SCHED | SCHEDULE |
| SF | SQUARE FEET |
| SHT | SHEET |
| SHTG | SHEATHING |
| SIM | SIMILAR |
| SPCS | SPACES |
| SPECS | SPECIFICATIONS |
| SQ | SQUARE |
| SSL | SHORT SLOTTED |
| SJ | SLAB JOINT |
| SS | STAINLESS STEEL |
| STD | STANDARD |
| STIFF | STIFFENER |
| STGRD | STAGGERED |
| STL | STEEL |
| STRUC | STRUCTURAL |
| SYM | SYMMETRICAL |
| TAS | THREADED ANCHOR STUD |
| T & B | TOP & BOTTOM |
| THK | THICK |
| THRD | THREADED |
| TN | TOE NAIL |
| T.O. | TOP OF |
| TRANS | TRANSVERSE |
| TS | TUBE STEEL |
| TYP | TYPICAL |
| UA | UNDERCUT ANCHOR |
| UNO | UNLESS NOTED OTHERWISE |
| V | VERTICAL |
| (V) | VERIFY |
| VERT | VERTICAL |
| W/ | WITH |
| W/O | WITHOUT |
| WD | WOOD |
| WF | WIDE FLANGE |
| WP | WORK POINT |
| WS | WATERSTOP |
| WT | STRUCTURAL TEE SECTION |
| WT | WEIGHT |
| WWF | WELDED WIRE FABRIC |
| x | TIMES OR BY |

# LEGEND

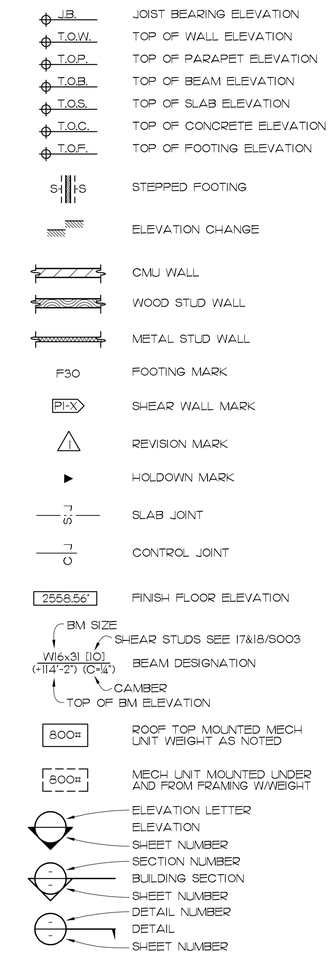



DESIGN WEST ARCHITECTS, P.A.
• MERIDIAN, IDAHO • PULLMAN, WASHINGTON •
• KENNEWICK, WASHINGTON • ONTARIO, OREGON •
www.designwestpa.com



© COPYRIGHT DESIGN WEST ARCHITECTS P.A. DESIGN CONCEPTS AND DRAWINGS NOT TO BE REUSED WITHOUT WRITTEN PERMISSION OF ARCHITECT


DRAWN BY
CJC

CHECKED BY
LAH

JOB NUMBER
22103

REVISIONS


LSB CONSULTING ENGINEERS
523 EAST THIRD AVENUE
SPOKANE, WA 99202
P 509.323.9292
F 509.747.7115


LAWRENCE A. HARRIS
STATE OF WASHINGTON
31630
REGISTERED PROFESSIONAL ENGINEER
12/20/23

**WSU GOLF TEAM CLUBHOUSE UPGRADE EXTERIOR & BLDG ADDITION**
**WASHINGTON STATE UNIVERSTIY PULLMAN, WA 99163**

DATE
**01/26/2024**

SHEET NAME
**INSPECTION, ABBREVS, & LEGEND**

SHEET
**S1.02**


Harris 1/26/2024 8:50:06 AM

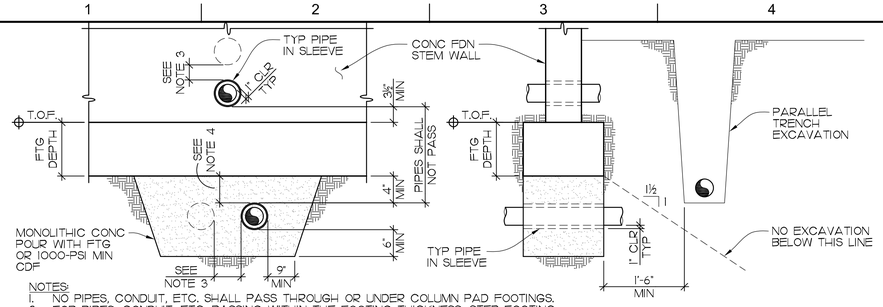


NOTES:
1. NO PIPES, CONDUIT, ETC. SHALL PASS THROUGH OR UNDER COLUMN PAD FOOTINGS.
2. FOR PIPES, CONDUIT, ETC. PASSING WITHIN THE FOOTING THICKNESS, STEP FOOTING DOWN AS REQ'D TO PASS THRU STEM WALL.
3. VERT & HORIZ SPACING BETWEEN ADJACENT PIPES SHALL BE 1½xLARGEST SLEEVE DIAMETER, BUT NOT LESS THAN 6".
4. FOR PIPES MORE THAN 3'-0" BELOW FOOTING, COMPACT BACKFILL OVER PIPE TO MINIMUM 90% AND OMIT THICKENED CONC SECTION.

## 1 TYPICAL PIPE AND/OR CONDUIT CLEARANCES AT FOUNDATION

NTS

| BAR SIZE | | f'c = 3000 PSI REGULAR BARS | f'c = 3000 PSI TOP BARS | f'c = 4000 PSI REGULAR BARS | f'c = 4000 PSI TOP BARS | f'c = 5000 PSI REGULAR BARS | f'c = 5000 PSI TOP BARS | HOOKED BARS (Ldh) 3000 PSI | 4000 PSI | 5000 PSI |
|---|---|---|---|---|---|---|---|---|---|---|
| #3 | Ld | 17" | 22" | 15" | 19" | 13" | 17" | 9" | 7" | 7" |
| | SPLICE | 22" | 28" | 19" | 24" | 17" | 22" | | | |
| #4 | Ld | 22" | 29" | 19" | 25" | 17" | 22" | 11" | 10" | 9" |
| | SPLICE | 29" | 37" | 25" | 32" | 22" | 29" | | | |
| #5 | Ld | 28" | 36" | 24" | 31" | 22" | 28" | 14" | 12" | 11" |
| | SPLICE | 36" | 47" | 31" | 40" | 28" | 36" | | | |
| #6 | Ld | 33" | 43" | 29" | 37" | 26" | 33" | 17" | 15" | 13" |
| | SPLICE | 43" | 56" | 37" | 48" | 33" | 43" | | | |
| #7 | Ld | 48" | 63" | 42" | 54" | 37" | 49" | 19" | 17" | 15" |
| | SPLICE | 63" | 81" | 54" | 70" | 49" | 63" | | | |
| #8 | Ld | 55" | 72" | 48" | 62" | 43" | 55" | 22" | 19" | 17" |
| | SPLICE | 72" | 93" | 62" | 80" | 55" | 72" | | | |
| #9 | Ld | 62" | 81" | 54" | 70" | 48" | 63" | 25" | 22" | 19" |
| | SPLICE | 81" | 105" | 70" | 91" | 63" | 81" | | | |
| #10 | Ld | 70" | 91" | 61" | 79" | 54" | 70" | 28" | 24" | 22" |
| | SPLICE | 91" | 118" | 79" | 102" | 70" | 91" | | | |
| #11 | Ld | 78" | 101" | 67" | 87" | 60" | 78" | 31" | 27" | 24" |
| | SPLICE | 101" | 131" | 87" | 113" | 78" | 101" | | | |

NOTES:
1. TABULATED VALUES ARE BASED ON ACI 318-14 FOR GRADE 60 UNCOATED REINFORCEMENT AND NORMAL-WEIGHT CONCRETE.
2. TOP BARS ARE HORIZONTAL BARS WITH MORE THAN 12" OF FRESH CONCRETE CAST BELOW THE BARS.
3. TABULATED VALUES REQUIRE THE FOLLOWING:
   CLR COVER › 1db
   BAR SPACING › 2db (BEAMS & COLUMNS)
   › 3db (ALL OTHER MEMBERS)
4. SPLICE LENGTH OF DIFFERENT SIZED BARS SHALL BE THE LARGER OF THE FOLLOWING:
   A. Ld OF LARGER BAR
   B. SPLICE LENGTH OF SMALLER BAR

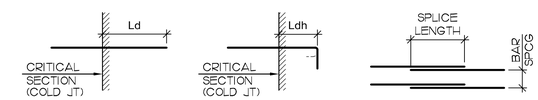


STD DEVELOPMENT | HOOK DEVELOPMENT | LAP SPLICE

## 3 TYPICAL DEVELOPMENT AND LAP-SPLICE LENGTHS FOR TENSION REINFORCEMENT IN CONCRETE, UNO

NTS

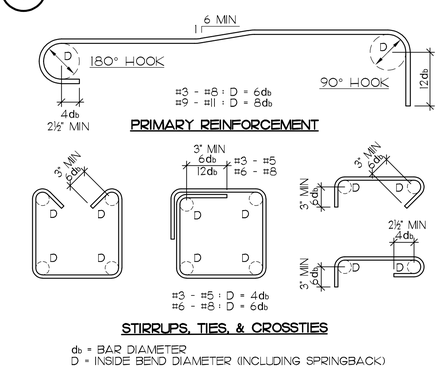


db = BAR DIAMETER
D = INSIDE BEND DIAMETER (INCLUDING SPRINGBACK)

## 6 TYPICAL REBAR BENDING DETAILS

NTS

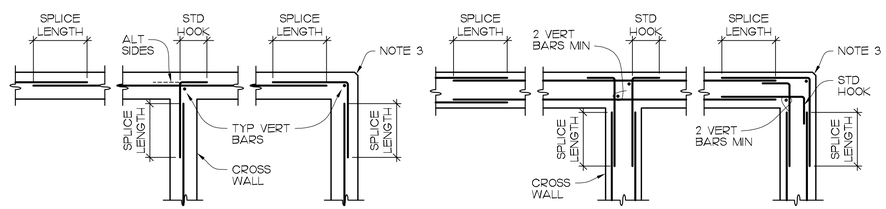


NOTES:
1. CORNER BARS SHALL MATCH SIZE & SPACING OF HORIZONTAL REINFORCEMENT, UNO. CORNER BARS AT INTERSECTING WALLS SHALL MATCH HORIZONTAL REINFORCEMENT OF CROSS WALL.
2. SPLICE LENGTH SHALL BE PER TYPICAL LAP-SPLICE SCHEDULE FOR TENSION REINFORCEMENT.
3. PROVIDE ¾" CHAMFER AT OUTSIDE WALL CORNERS NOT IN CONTACT WITH SOIL.

## 7 TYPICAL CONCRETE WALL REINFORCING @ INTERSECTION, CORNER, & BAR SPLICE

NTS

| SAW TYPE | SAWCUT DEPTH |
|---|---|
| CONVENTIONAL WET-CUT | T/4 |
| EARLY-ENTRY DRY-CUT | 1" MIN @ T ≤ 8" |
| | 1½" MIN @ T > 8" |

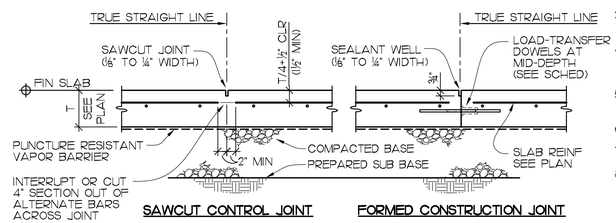


NOTES:
1. SEE ARCHL DRAWINGS FOR VAPOR BARRIER REQUIREMENTS. MINIMIZE VAPOR BARRIER PENETRATIONS WITH FORM STAKES, NAILS, SPIKES OR OTHER CONSTRUCTION DEVICES TO THE FULLEST EXTENT PRACTICAL.
2. SEE GENERAL STRUCTURAL NOTES FOR SLAB JOINT LAYOUT REQUIREMENTS.
3. SEE GEOTECHNICAL REPORT FOR COMPACTED BASE AND PREPARED SUB BASE REQUIREMENTS.
4. SLABS POURED DIRECTLY ON VAPOR BARRIER MAY TAKE LONGER TO CURE THAN SLABS NOT IN DIRECT CONTACT WTIH VAPOR BARRIER.
5. WHEREVER POSSIBLE, ALIGN JOINTS WITH RE-ENTRANT SLAB CORNERS AND INTERIOR COLUMNS.
6. ALL SLAB REINFORCEMENT SHALL BE DISCONTINUOUS AT FORMED JOINTS. SEE ARCHL DRAWINGS FOR JOINT SEALANT REQUIREMENTS.
7. AT CONTROL JOINTS, SAWCUT ALONG SHORT DIRECTION OF POUR FIRST. FOR EARLY-ENTRY DRY-CUT SAWS, USE AS SOON AS POSSIBLE WITHOUT CAUSING RAVELING OF CONCRETE EDGES.

## 9 TYPICAL CONCRETE SLAB ON GRADE W/ STEEL-BAR REINFORCEMENT

NTS

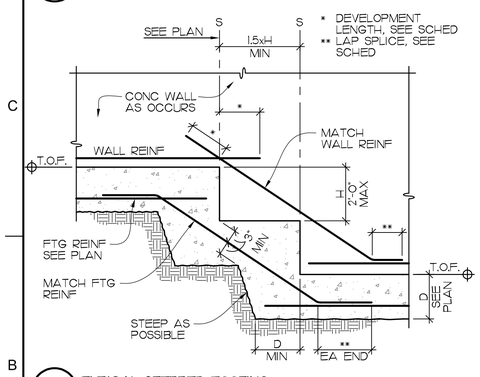


## 11 TYPICAL STEPPED FOOTING

NTS

| SLAB DEPTH (T) | ROUND BAR SIZE | ROUND BAR SPACING | DIAMOND PLATE SIZE | DIAMOND PLATE SPACING |
|---|---|---|---|---|
| 4" | ½"⌀x10" | 16" OC | ¼x4½x4½ | 18" OC |
| 4"< T≤6" | ¾"⌀x10" | 12" OC | ¼x4½x4½ | 18" OC |
| 6"< T≤8" | 1"⌀x13" | 12" OC | ⅜x4½x4½ | 18" OC |
| 8"< T≤11" | 1¼"⌀x15" | 12" OC | ¾x4½x4½ | 20" OC |

EITHER ROUND-BAR OR DIAMOND-PLATE DOWELS MAY BE USED AT CONTRACTOR'S OPTION.

ROUND BAR NOTES:
1. PROVIDE SMOOTH STEEL DOWELS W/ SAWN & DEBURRED END EDGES. GREASE OR WRAP ONE END TO PREVENT BOND.
2. DOWELS SHALL BE SUPPORTED SO AS TO REMAIN LEVEL AND PERPENDICULAR TO JOINT LINE.
3. DOWELS SHALL BE PLACED NO CLOSER THAN 12" FROM JOINT INTERSECTIONS.

DIAMOND PLATE NOTES:
1. DIAMOND-DOWEL SYSTEM SHALL BE PROVIDED BY PNA CONSTRUCTION TECHNOLOGIES, OR APPROVED EQUIVALENT.
2. INSTALL DOWELS AS RECOMMENDED BY MANUFACTURER.

## 12 TYPICAL SCHEDULE FOR LOAD-TRANSFER DOWELS AT SLAB-ON-GRADE CONSTRUCTION JOINTS

NTS

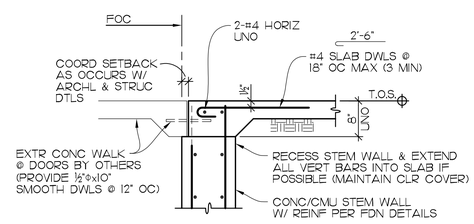


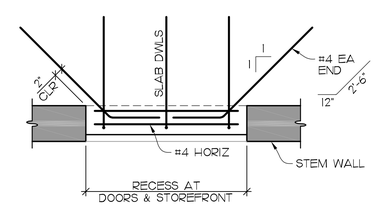


## 13 TYPICAL SLAB EDGE POUROVER AT EXTERIOR DOORS & STOREFRONT, UNO

NTS

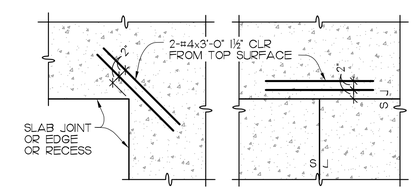


NOTES:
1. SEE GENERAL STRUCTURAL NOTES AND TYPICAL DETAILS FOR JOINTING PARAMETERS AT SLABS ON GRADE. ALSO SEE ARCH'L DRAWINGS FOR SPECIFIC JOINT LOCATIONS.
2. RE-ENTRANT CORNERS AND DISCONTINUOUS JOINTS SHALL BE AVOIDED IF POSSIBLE.

## 15 TYPICAL REINFORCING AT RE-ENTRANT CORNERS AND DISCONTINUOUS JOINTS IN EXPOSED SLABS ON GRADE

NTS

DESIGN WEST ARCHITECTS, P.A.
• MERIDIAN, IDAHO • PULLMAN, WASHINGTON •
• KENNEWICK, WASHINGTON • ONTARIO, OREGON •
www.designwestpa.com

© COPYRIGHT DESIGN WEST ARCHITECTS P.A. DESIGN CONCEPTS AND DRAWINGS NOT TO BE REUSED WITHOUT WRITTEN PERMISSION OF ARCHITECT

DRAWN BY CJC
CHECKED BY LAH
JOB NUMBER 22103
REVISIONS

LSB CONSULTING ENGINEERS
523 EAST THIRD AVENUE
SPOKANE, WA 99202
P 509.323.9292
F 509.747.7115

LAWRENCE A. HARRIS — STATE OF WASHINGTON — 31630 — REGISTERED PROFESSIONAL ENGINEER — 12/20/23

WSU GOLF TEAM CLUBHOUSE UPGRADE
EXTERIOR & BLDG ADDITION
WASHINGTON STATE UNIVERSITY
PULLMAN, WA 99163

DATE 01/26/2024

SHEET NAME
TYPICAL CONCRETE DETAILS

SHEET S1.03

Harris 1/26/2024 8:50:11 AM

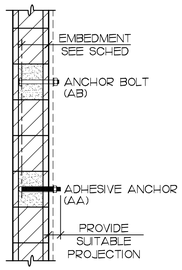


| MINIMUM EMBEDMENT SCHEDULE | | | | |
|---|---|---|---|---|
| BOLT SIZE | ANCHOR BOLT (AB) | | | ADHESIVE ANCHOR (AA) |
| | 6" CMU | 8" CMU | 10"/12" CMU | |
| ⅜"Φ | 4" | 4" | 4" | 3⅜" |
| ½"Φ | 4" | 5" | 6" | 4½" |
| ⅝"Φ | 4" | 5" | 8" | 5⅝" |
| ¾"Φ | - | 6" | 8" | 6¾" |
| ⅞"Φ | - | 6" | 8" | - |
| 1"Φ | - | 6" | 8" | - |

AB NOTES:
1. PROVIDE MIN 12xDIA SPACING BETWEEN BOLTS AND MIN 6xDIA EDGE DISTANCE, UNO.
2. AB MUST BE IN GROUTED CELL OF CMU.
3. IF BOLT IS LOCATED LESS THAN 3xDIA ABOVE OR BELOW BED JOINT, GROUT ADD'L CELL ON OPPOSITE SIDE OF JOINT.
4. EMBEDMENTS SHOWN ARE A MINIMUM VALUE. SPECIFIC DETAILS MAY REQUIRE GREATER EMBEDMENTS.
5. PROVIDE 1" MIN GROUT ALL AROUND AB IN CMU FACE SHELL.

AA NOTES:
1. ADHESIVE SYSTEM SHALL BE PER GENERAL STRUCTURAL NOTES.
2. INSTALL ADHESIVE ANCHORS IN FULLY GROUTED CMU PER THE MANUFACTURER'S PUBLISHED INSTALLATION INSTRUCTIONS WITH CONTINUOUS SPECIAL INSPECTION PROVIDED.
3. THREADED ROD ANCHORS SHALL NOT BE LOCATED IN OR WITHIN 1½" OF HEAD JOINTS (VERTICAL MORTAR JOINT).
4. THREADED ROD ANCHORS ARE LIMITED TO 1 PER CELL WITH A MINIMUM SPACING OF 8" OC.
5. EDGE DISTANCES SHALL BE 12" MINIMUM FROM END OF WALL AND 12" MINIMUM TO THE TOP OF WALL.
6. PROVIDE HOT DIPPED GALVANIZED RODS FOR DAMP OR EXTERIOR APPLICATIONS AND WHEN IN CONTACT W/ PRESSURE TREATED WOOD.
7. ADHESIVE ANCHORS MAY NOT BE USED TO SUPPORT GRAVITY LOADS ON FIRE-RATED CMU WALLS.

## 1 TYPICAL MINIMUM ANCHOR EMBEDMENT IN CMU WALL

NTS

| MINIMUM WALL REINFORCING, UNO | | |
|---|---|---|
| WALL SIZE | VERTICAL | HORIZONTAL |
| 4" | #3 @ 24" OC | JOINT REINF @ 16" OC |
| 6" | #4 @ 32" OC | 2-#4 @ 48" OC |
| 8" | #5 @ 48" OC | 2-#5 @ 48" OC |
| 10" | #5 @ 32" OC | 2-#5 @ 48" OC |
| 12" | #6 @ 48" OC | 2-#6 @ 48" OC |

NOTES:
1. ALL REINFORCEMENT SHALL BE GRADE 60.
2. GROUT REINFORCED CELLS ONLY, UNO.
3. VERTICAL REINFORCING SHALL BE CENTERED IN THE WALL, UNO.
4. JOINT REINFORCEMENT SHALL BE TRUSS-TYPE 9-GA MINIMUM.

## 3 TYPICAL MINIMUM CMU WALL REINFORCEMENT

NTS

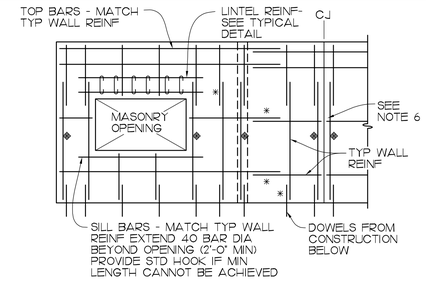


* LAP BARS PER SCHEDULE (UNO)
◆ ADDITIONAL FULL HEIGHT VERTICAL BARS AT WALL END, CORNERS, INTERSECTIONS, CONTROL JOINTS AND JAMBS OF OPENINGS - MATCH TYP WALL REINF

| REBAR LAP SPLICE SCHEDULE | | | | | | | |
|---|---|---|---|---|---|---|---|
| BAR SIZE | 6" CMU | 8" CMU | | 10" CMU | | 12" CMU | |
| LOCATION | CNTR | CNTR | FACE | CNTR | FACE | CNTR | FACE |
| #3 | 1'-0" | | | | | | |
| #4 | 1'-4" | 1'-4" | 1'-10" | | | | |
| #5 | | 1'-6" | 2'-10" | 1'-4" | 2'-10" | | |
| #6 | | 3'-2" | 4'-6" | 2'-6" | 4'-6" | 2'-0" | 4'-6" |
| #7 | | | | 3'-10" | 5'-3" | 2'-9" | 5'-3" |
| #8 | | | | 5'-1" | | 4'-2" | 6'-0" |

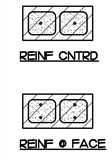


NOTES:
1. f'm = 2000 PSI MINIMUM
2. USE SMALLER BAR LAP LENGTH WHEN SPLICING DIFFERENT SIZED BARS
3. LAP LENGTHS SPECIFICALLY DETAILED ON DRAWINGS GOVERN OVER SCHEDULED LAP LENGTHS
4. MECHANICAL COUPLERS MAY BE USED IN LIEU OF ANY LAP LENGTH SHOWN
5. IF LAP LENGTH EXCEEDS GROUT MAXIMUM POUR HEIGHT OF 5'-4", USE HIGH LIFT GROUTING OR MECHANICAL COUPLERS.
6. TYPICAL HORIZONTAL REINFORCING SHALL BE DISCONTINUOUS AT CONTROL JOINTS (CJ), EXCEPT FOR BOND BEAMS AT ROOF & FLOOR LEVELS, TOP OF WALL, AND AS NOTED OTHERWISE IN THE DETAILS.

## 4 TYPICAL CMU WALL REINFORCEMENT & SPLICES (STRENGTH DESIGN)

NTS

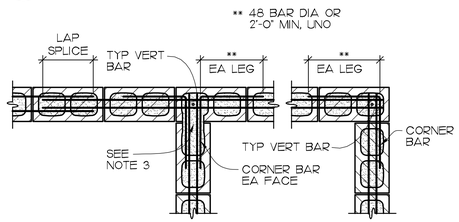


NOTES:
1. SEE TYPICAL CMU WALL REINFORCEMENT DETAIL FOR MINIMUM LAP SPLICE LENGTHS.
2. CORNER BARS SHALL MATCH SIZE AND SPACING OF HORIZONTAL WALL REINFORCEMENT.
3. AT WALL INTERSECTIONS, BREAK FACE SHELLS AT BOND BEAMS TO CREATE FULL-COURSE KEYWAYS.

## 6 TYPICAL HORIZONTAL REINFORCING AT CMU WALL INTERSECTION, CORNER, AND BAR SPLICE

NTS

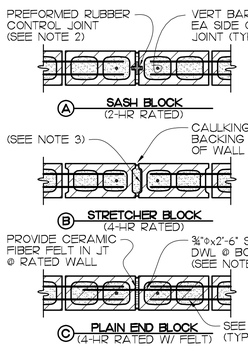


NOTES:
1. CONTRACTOR'S OPTION TO USE ANY JOINT TYPE SHOWN AT LEFT, PROVIDED FIRE-RATING REQUIREMENTS ARE MET AS APPLICABLE.
2. OPTION 'A': PROVIDE HOHMANN & BARNARD "RS STANDARD" RUBBER JOINT OR APPROVED EQUAL.
3. OPTION 'B': PROVIDE BLDG PAPER OR ASPHALT EMULSION PAINT ON ONE SIDE OF SPACE AND FILL WITH GROUT.
4. OPTION 'C': PREVENT BOND BTWN DOWEL AND GROUT AT ONE END WITH GREASE OR PLASTIC SLEEVE. CAP END TO ALLOW ¾" OF MOVEMENT.
5. TYPICAL HORIZONTAL REINFORCING SHALL BE DISCONTINUOUS AT CONTROL JOINTS, EXCEPT FOR BOND BEAMS AT ROOF & FLOOR LEVELS, TOP OF WALL, AND AS NOTED OTHERWISE IN THE DETAILS.
6. COORDINATE CONTROL JOINT LOCATIONS WITH ARCH. DRAWINGS. NOTIFY ARCHITECT AND ENGINEER OF ANY DISCREPANCIES.
7. UNLESS NOTED OTHERWISE, CONTROL JOINTS SHALL BE PLACED AT THE LOCATIONS SHOWN AT RIGHT.

## 7 TYPICAL CMU WALL CONTROL JOINT CONSTRUCTION & RECOMMENDED LOCATIONS

NTS

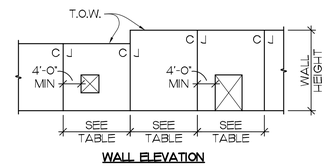


WALL ELEVATION

- CHANGES IN WALL HEIGHT OR THICKNESS
- LESS THAN ½ RECOMMENDED SPACING FROM CORNERS & WALL INTERSECTIONS
- 4'-0" MIN FROM OPENINGS

| RECOMMENDED MAX JOINT SPACING AT REINFORCED CMU WALL | | |
|---|---|---|
| | PARTIAL GROUT | SOLID GROUT |
| FUNCTION OF WALL HEIGHT | 3xHEIGHT | 2.5xHEIGHT |
| MAX. SPACING | 46 FEET | 40 FEET |

## 8 TYPICAL CMU BOND BEAM

NTS

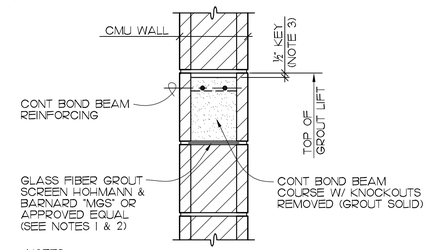


NOTES:
1. BUILDING PAPER AS GROUT STOP IS NOT PERMITTED.
2. GROUT STOP IS TO BE DISCONTINUOUS TO ALLOW GROUT FLOW AT VERTICAL CELLS RECEIVING GROUT.
3. FORM GROUT KEY BETWEEN LIFTS BY TERMINATING GROUT ½" BELOW TOP OF CMU UNIT WHEN BOND BEAM IS AT TOP OF LIFT. FORM 1½" KEY IN VERTICAL GROUTED CORES WHEN BOND BEAM IS NOT PRESENT. FORM A KEY ONLY WHERE COURSE ABOVE WILL RECEIVE GROUT IN SUBSEQUENT LIFT.

| WALL SIZE | OFFSET FROM WALL ℄ (*) |
|---|---|
| 8" | 1¼" |
| 10" | 1⅝" |
| 12" | 2⅜" |

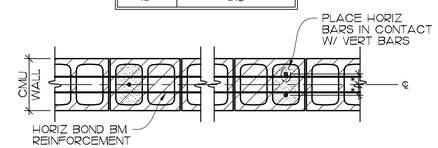


## 10 TYPICAL LOCATION OF CMU WALL REINFORCING, UNO

NTS

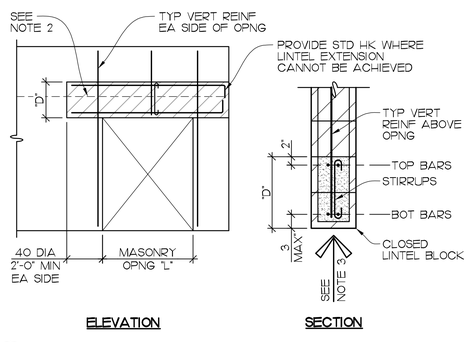


| MASONRY LINTEL SCHEDULE | | | | | | | | |
|---|---|---|---|---|---|---|---|---|
| OPNG "L" (MARK) | DEPTH "D" | BOT BARS | | | TOP BARS | | | STIRRUPS |
| | | 6" CMU | 8"/10" CMU | 12" CMU | 6" CMU | 8"/10" CMU | 12" CMU | |
| ≤ 4'-0" | 16" | 2-#4 | 2-#5 | 2-#6 | --- | 2-#5 | 2-#6 | --- |
| ≤ 6'-0" | 16" | 2-#4 | 2-#5 | 2-#6 | 2-#4 | 2-#5 | 2-#6 | #3 @ 8" OC |
| ≤ 8'-0" | 24" | 2-#4 | 2-#5 | 2-#6 | 2-#4 | 2-#5 | 2-#6 | #3 @ 8" OC |
| L-1 | | | | | | | | |
| L-2 | | | | | | | | |
| L-3 | | | | | | | | |

NOTES:
1. LINTELS SHALL BE CONSTRUCTED WITH OPEN-END MASONRY UNITS AT ALL COURSES AND GROUTED SOLID.
2. TYPICAL HORIZ WALL REINF SHALL EXTEND CONTINUOUS THRU LINTEL OR LAP WITH HORIZ LINTEL REINF IF IN SAME COURSE.
3. SHORE LINTEL UNTIL GROUT REACHES DESIGN STRENGTH.
4. WHEN NECESSARY, LAP LINTEL REINF AS FOLLOWS:
   - LAP BOTTOM REINF AT SUPPORTS
   - LAP TOP REINF AT MID-SPAN

## 11 TYPICAL CMU LINTEL CONSTRUCTION AND REINFORCEMENT SCHEDULE

NTS

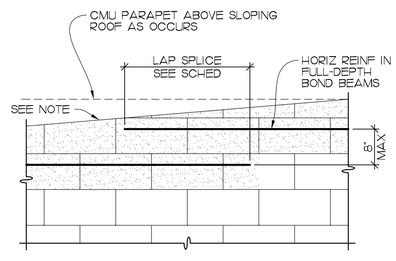


STEPPED BOND BEAM

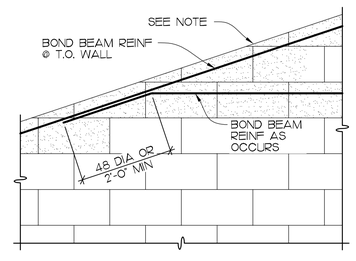


SLOPED BOND BEAM

NOTE:
CUT CMU TO MATCH DESIRED SLOPE AT TOP OF WALL OR STAIR-STEP CMU BLOCKS, THEN FORM AND POUR W/ GROUT.

## 13 TYPICAL BOND BEAM OPTIONS AT SLOPED CMU WALL (OR AT SLOPING ROOF BELOW CMU PARAPET)

NTS


DESIGN WEST ARCHITECTS, P.A.
• MERIDIAN, IDAHO • PULLMAN, WASHINGTON •
• KENNEWICK, WASHINGTON • ONTARIO, OREGON •
www.designwestpa.com



© COPYRIGHT DESIGN WEST ARCHITECTS P.A. DESIGN CONCEPTS AND DRAWINGS NOT TO BE REUSED WITHOUT WRITTEN PERMISSION OF ARCHITECT


DRAWN BY
CJC

CHECKED BY
LAH

JOB NUMBER
22103

REVISIONS


LSB CONSULTING ENGINEERS
523 EAST THIRD AVENUE
SPOKANE, WA 99202
P 509.323.9292
F 509.747.7115


LAWRENCE A. HARRIS
STATE OF WASHINGTON
31630
REGISTERED PROFESSIONAL ENGINEER
12/20/23

WSU GOLF TEAM
CLUBHOUSE UPGRADE
EXTERIOR & BLDG ADDITION

WASHINGTON STATE UNIVERSITY
PULLMAN, WA 99163

DATE
01/26/2024

SHEET NAME
TYPICAL MASONRY DETAILS

SHEET
S1.04

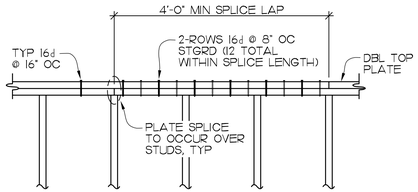


1 TYPICAL MINIMUM DOUBLE TOP-PLATE LAP AND MINIMUM SPLICE NAILING

NTS

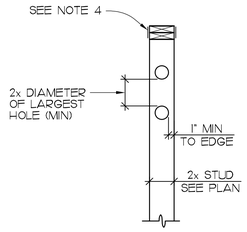


WALL STUDS

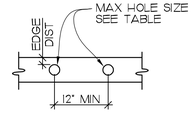


TOP & BOTTOM PLATES @ SHEAR WALLS

| WALL STUDS | | | |
|---|---|---|---|
| | MAX DRILLED HOLE SIZE | | |
| STUD SIZE | STRUCTURAL WALLS[3] | BUILT-UP STUDS[5] | NON-STRUCT WALLS |
| 2x4 | 1"Φ | ⅞"Φ | 2"Φ |
| 2x6 | 2"Φ | 1⅜"Φ | 3¼"Φ |
| 2x8 | 3"Φ | 1¾"Φ | 4¼"Φ |

| TOP & BOTTOM PLATES | | | |
|---|---|---|---|
| | MAX DRILLED HOLE SIZE | | |
| PLATE SIZE | SHEAR WALLS | OTHER WALLS | MIN EDGE DISTANCE |
| 2x4 | 1"Φ | 1½"Φ | 1" |
| 2x6 | 2"Φ | 2½"Φ | 1½" |
| 2x8 | 3"Φ | 3¼"Φ | 2" |

2 HOLE GUIDELINES AT STRUCTURAL WOOD-STUD WALLS

NTS

NOTES:
1. VERIFY ALL PLUMBING WALL LOCATIONS W/ ARCHL DRAWINGS.
2. PLACE AN ADDITIONAL STUD BELOW JOIST BEARING LOCATION ADJACENT TO HOLE IN TOP PLATE.
3. STRUCTURAL WALLS INCLUDE LOAD BEARING WALLS, SHEAR WALLS, AND EXTERIOR WALLS.
4. SEE DETAIL 2/S1.01 FOR REINFORCEMENT OF LARGER DIAMETER HOLES IN TOP PLATES OF SHEAR WALLS.
5. BUILT-UP STUDS AT HEADERS/BEAMS AND AT HOLDOWNS.
6. HOLES ARE NOT ALLOWED IN THE MIDDLE ⅓ OF THE STUD HEIGHT WITHOUT PRIOR APPROVAL FROM THE EOR.
7. NOTCHING OF STUDS AND/OR PLATES IS NOT ALLOWED WITHOUT PRIOR APPROVAL OF THE EOR.
8. HOLE DIAMETER IN STRUCTURAL WALL STUDS CAN BE INCREASED 50% IF STUDS ARE DOUBLED, WITH NO MORE THAN TWO CONSECUTIVE STUDS DOUBLED.

| NAIL SIZE REQUIREMENTS | | |
|---|---|---|
| "COMMON" NAIL DESIGNATION | NAIL DIMENSIONS | |
| | DIAMETER (D) | LENGTH (L) |
| 6d | 0.113" | 2" |
| 8d | 0.131" | 2½" |
| 10d | 0.148" | 3" |
| 12d | 0.148" | 3¼" |
| 16d | 0.162" | 3½" |
| 20d | 0.192" | 4" |

NOTES:
1. NAILS SPECIFIED IN STRUCTURAL DRAWINGS AND NOTES REFER TO "COMMON" TYPE NAILS (TYPICAL, UNO).
2. NAILS THAT MATCH ONE OF THE TWO "NAIL DIMENSIONS" ARE NOT ACCEPTABLE.
3. FOR NAILING NOT SHOWN IN THE CONSTRUCTION DRAWINGS, USE "COMMON" NAILS AS INDICATED IN THE IBC FASTENING SCHEDULE.

5 TYPICAL SIZE REQUIREMENTS FOR FRAMING NAILS

NTS

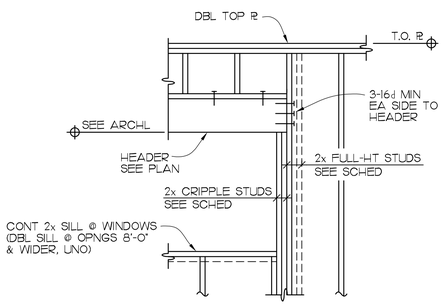


6 TYPICAL EXTERIOR WALL HEADER & SILL FRAMING, UNO

NTS

| STUD SCHEDULE | | |
|---|---|---|
| OPNG WIDTH | CRIPPLE STUDS | FULL-HT STUDS |
| < 4'-0" | 1 | 1 |
| 4'-0" - 8'-0" | 2 | 2 |
| > 8'-0" | 3 | 3 |

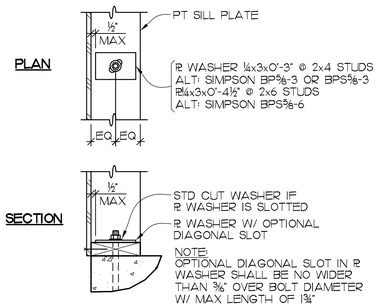


8 TYPICAL STEEL ℞ WASHER AT WOOD SHEAR WALLS

NTS

| SHEAR WALL SCHEDULE | | | | | | | | |
|---|---|---|---|---|---|---|---|---|
| | SHEATHING & FASTENING | | | | | PLATE FASTENING | | |
| WALL MARK | APA-RATED PLYWOOD/OSB SHEATHING (1) | NAIL SIZE (2) | EDGE NAIL (EN) SPACING | FIELD NAIL (FN) SPACING | FRAMING AT ADJOINING PANEL EDGES (4) | (1) BOTTOM PLATE NAILING TO WOOD BELOW | (2) RIM BOARD/ BLKG TO PLATE BELOW | SILL PLATE BOLTING |
| PI-6 | 15/32" - ONE SIDE | 8d | 6" OC | 12" OC | 2x | 16d @ 8" OC | A35 @ 24" OC | ⅝"Φ AB @ 48" OC |
| PI-4 | 15/32" - ONE SIDE | 8d | 4" OC | 12" OC | 2x | 16d @ 6" OC | A35 @ 16" OC | ⅝"Φ AB @ 32" OC |
| PI-3 | 15/32" - ONE SIDE | 8d | 3" OC | 12" OC | 2x | 2-ROWS 16d @ 8" OC (5) | A35 @ 12" OC | ⅝"Φ AB @ 24" OC |
| PI-2 | 15/32" - ONE SIDE | 8d | 2" OC (3) | 12" OC | 3x OR DBL 2x | 2-ROWS 16d @ 6" OC (5) | A35 @ 8" OC | ⅝"Φ AB @ 18" OC |

NOTE:
1. 7/16" APA-RATED SHEATHING MAY BE USED IN PLACE OF 15/32" SHEATHING, PROVIDED ALL STUDS ARE SPACED @ 16" O.C. MAX OR PANELS ARE APPLIED WITH LONG DIMENSION ACROSS STUDS.
2. COMMON NAILS SHALL BE USED UNLESS NOTED OTHERWISE.
3. AT ADJOINING PANEL EDGES, NAILS SPACED AT 2" OC INTO A SINGLE 3x MEMBER SHALL BE STAGGERED.
4. DBL 2x STUDS SHALL BE FASTENED TOGETHER WITH 2-ROWS OF 10d COMMON NAILS AT 6" OC.
5. WHERE BOTTOM PLATE REQUIRES 2 ROWS OF NAILING, PROVIDE ADDL JOIST, RIM BOARD, OR BLKG AND STAGGER THE NAILS. FACE NAIL W/ 2 ROWS OF 10d @ 6" OC.

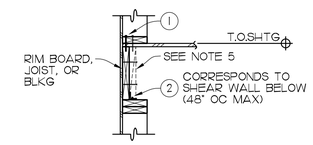


9 TYPICAL WOOD STRUCTURAL PANEL SHEAR WALL SCHEDULE

NTS

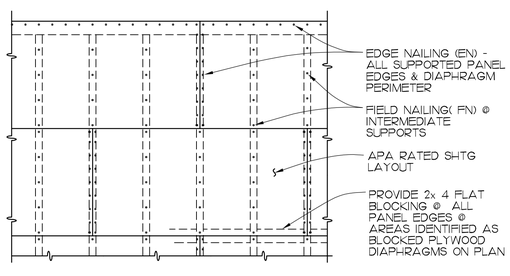


NOTES:
1. MIN EDGE DISTANCE FOR NAILS SHALL BE ⅜".
2. MIN SHEATHING SHEET SIZE SHALL BE 2'-0"x4'-0".
3. NAILS SHALL NOT BE OVERDRIVEN.
4. NAILS SHALL BE COMMON WIRE TYPE OR APPROVED EQUAL.
5. LAY FACE GRAIN PERPENDICULAR TO JST/TRUSSES & STAGGER PANEL JOINTS.
6. PLY CLIPS MAY BE SUBSTITUTED FOR T & G.

11 TYPICAL CONSTRUCTION OF APA-RATED SHEATHED ROOF DIAPHRAGM

NTS

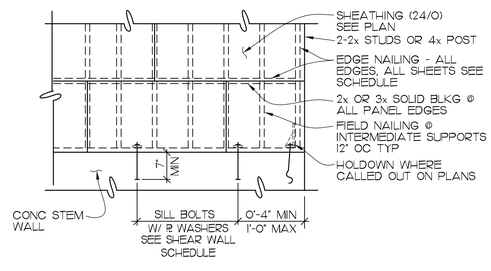


PARTIAL WALL ELEVATION

ELEVATION NOTES:
1. MIN EDGE DISTANCE FOR NAILS SHALL BE ⅜"
2. MIN SHEATHING SHEET SIZE SHALL BE 2'-0"x4'-0"
3. NAILS SHALL BE INSTALLED FLUSH TO SURFACE OF SHEATHING AND SHALL NOT BE OVERDRIVEN
4. NAILS SHALL BE COMMON WIRE TYPE OR APPROVED EQUAL
5. INSTALL PANELS WITH LONG DIMENSION HORIZONTAL UNO
6. PROVIDE SHEATHING AND SPECIFIED NAILING FOR THE FULL LENGTH OF WALL AS INDICATED ON THE PLANS
7. PROVIDE HOT-DIPPED GALVANIZED NAILS FOR FASTENING INTO PRESSURE TREATED SILL PLATES
8. PROVIDE EDGE NAILING FULL HEIGHT TO HOLDOWN POSTS PROVIDE EDGE NAILING TO EACH 2x STUD OF BUILT-UP MULTI 2x HOLDOWN POSTS

13 TYPICAL CONSTRUCTION OF WOOD STRUCTURAL-PANEL SHEAR WALLS

NTS

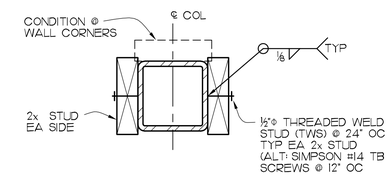


HSS COLUMN

15 TYPICAL WOOD STUD ATTACHMENT TO COLUMN

NTS

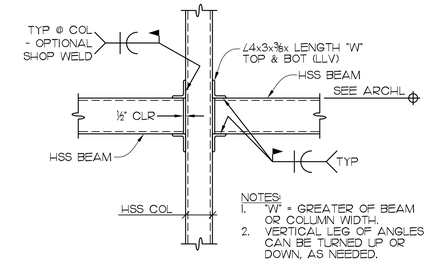


NOTES:
1. "W" = GREATER OF BEAM OR COLUMN WIDTH.
2. VERTICAL LEG OF ANGLES CAN BE TURNED UP OR DOWN, AS NEEDED.

20 TYPICAL HORIZONTAL HSS MEMBER TO HSS COLUMN CONNECTION

NTS


DESIGN WEST ARCHITECTS, P.A.
• MERIDIAN, IDAHO • PULLMAN, WASHINGTON •
• KENNEWICK, WASHINGTON • ONTARIO, OREGON •
www.designwestpa.com



© COPYRIGHT DESIGN WEST ARCHITECTS P.A. DESIGN CONCEPTS AND DRAWINGS NOT TO BE REUSED WITHOUT WRITTEN PERMISSION OF ARCHITECT


DRAWN BY CJC

CHECKED BY LAH

JOB NUMBER 22103

REVISIONS


LSB CONSULTING ENGINEERS
523 EAST THIRD AVENUE
SPOKANE, WA 99202
P 509.323.9292
F 509.747.7115


LAWRENCE A. HALEY — STATE OF WASHINGTON — 31638 — REGISTERED PROFESSIONAL ENGINEER — 12/20/23

WSU GOLF TEAM CLUBHOUSE UPGRADE EXTERIOR & BLDG ADDITION

WASHINGTON STATE UNIVERSITY PULLMAN, WA 99163

DATE 01/26/2024

SHEET NAME TYPICAL WOOD DETAILS

SHEET S1.05

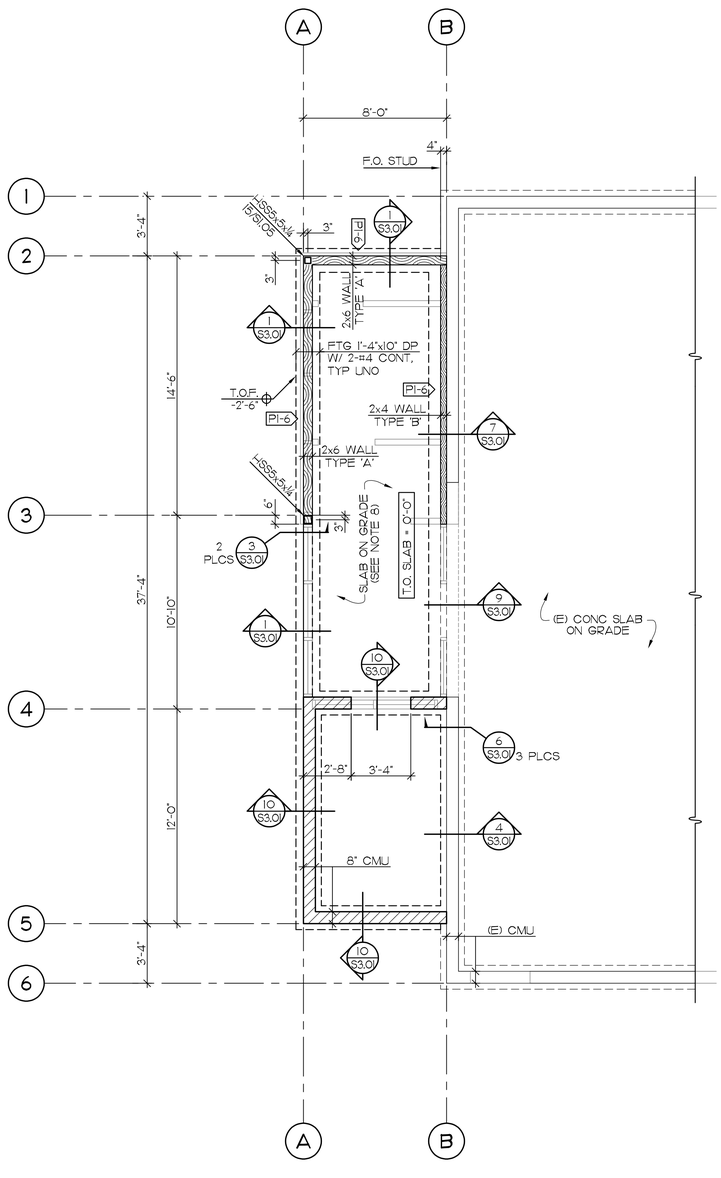


FLOOR & FOUNDATION PLAN

¼"=1'-0"

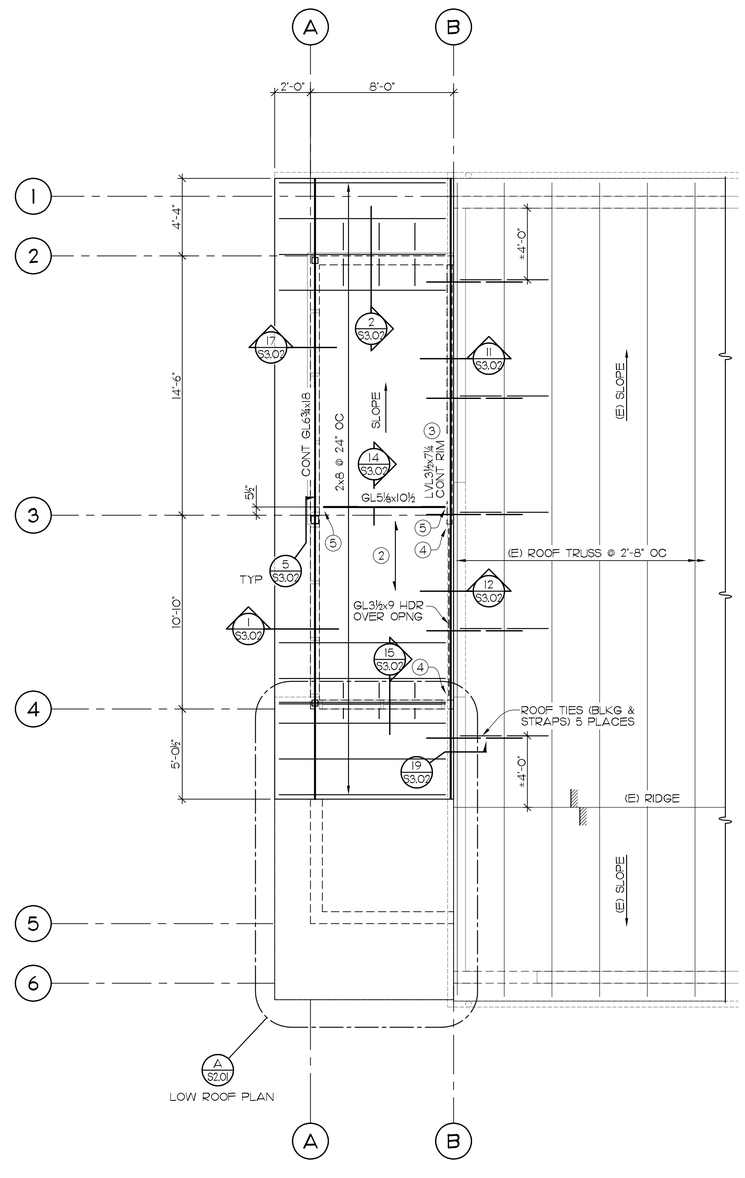


ROOF FRAMING PLAN

¼"=1'-0"

## FLOOR/FOUNDATION PLAN NOTES

1. SEE SHEET S1.01 & S1.02 FOR GENERAL STRUCTURAL NOTES, INSPECTIONS, ABBREVIATIONS, AND LEGEND.
2. COORDINATE & VERIFY ALL DIMENSIONS WITH ARCHL DRAWINGS.
3. SEE SHEETS S1.03 AND S1.04 FOR TYPICAL DETAILS.
4. ALL DIMENSION LINES ARE @ COL, FACE OF STUD, OR FACE OF CONCRETE, UNO.
5. LOCATE FOOTINGS ON @ WALLS, COLUMNS, ETC UNO.
6. PIPES MAY PASS THROUGH STRUCTURAL CONCRETE IN SLEEVES BUT SHALL NOT BE EMBEDDED THEREIN (SEE 1/S1.03).
7. REFER TO ALL ARCHITECTURAL, ELECTRICAL & MECHANICAL PLANS FOR PROPER COORDINATION WITH ALL OTHER TRADES.
8. PROVIDE 5" CONCRETE SLAB ON GRADE OVER 6" COMPACTED BASE COURSE, REINFORCED WITH #4 @ 16" OC EACH WAY (SEE 9/S1.03). SEE ARCHL DRAWINGS FOR SLAB FINISH.

## STUD WALL TYPES

TYPE 'A': 2x6 STUDS @ 16" OC MAX. STUDS SHALL BE SAWN LUMBER OR 2.0E LVL MATERIAL.

TYPE 'B': 2x4 STUDS @ 16" OC MAX. STUDS SHALL BE 2.0E LVL MATERIAL ONLY.

## KEY NOTES

1. PROVIDE A35 CLIP ON EACH SIDE AND AT EACH END OF DOUBLE 2x8 ROOF JOIST ON GRID 5.
2. SHEATH ALL FRAMED ROOFS WITH ⅝" APA-RATED PLYWOOD/OSB PER GENERAL STRUCTURAL NOTES. ORIENT STRENGTH AXIS PERPENDICULAR TO FRAMING MEMBERS.
3. CONTINUOUS LVL RIM ALONG GRID B CAN BE PROVIDED IN TWO SEPARATE BUT EQUAL LENGTHS (APPROX 17'-6" EACH) IF NEEDED FOR SHIPPING OR INSTALLATION.
4. FOR GLULAM HEADER ON GRID B, SEE DETAIL 6/S1.05 FOR SUPPORT AT NORTH END & PROVIDE HUC48 HANGER AT SOUTH END WITH 10-¼x2½ TITEN TURBO SCREWS INTO CMU WALL.
5. FOR GLULAM ROOF BEAM ADJACENT TO GRID 3, POCKET INTO WALL AT EAST END AND PROVIDE HUCQ5.25/9-SDS HANGER AT WEST END.

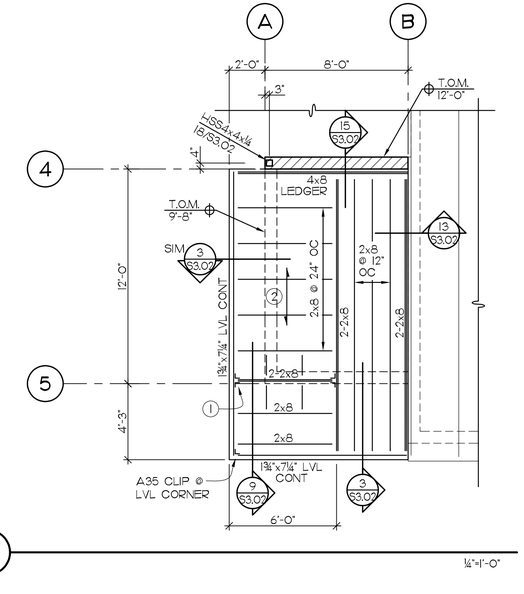


A

¼"=1'-0"

DESIGN WEST ARCHITECTS, P.A.
• MERIDIAN, IDAHO • PULLMAN, WASHINGTON •
• KENNEWICK, WASHINGTON • ONTARIO, OREGON •
www.designwestpa.com

© COPYRIGHT DESIGN WEST ARCHITECTS P.A. DESIGN CONCEPTS AND DRAWINGS NOT TO BE REUSED WITHOUT WRITTEN PERMISSION OF ARCHITECT

DRAWN BY
CJC

CHECKED BY
LAH

JOB NUMBER
22103

REVISIONS

LSB CONSULTING ENGINEERS
523 EAST THIRD AVENUE
SPOKANE, WA 99202
P 509.323.9292
F 509.747.7115

LAWRENCE A. HARRIS
STATE OF WASHINGTON
31458
REGISTERED PROFESSIONAL ENGINEER
12/20/23

WSU GOLF TEAM
CLUBHOUSE UPGRADE
EXTERIOR & BLDG ADDITION
WASHINGTON STATE UNIVERSTIY
PULLMAN, WA 99163

DATE
01/26/2024

SHEET NAME
FOUNDATION & FRAMING PLANS

SHEET
S2.01

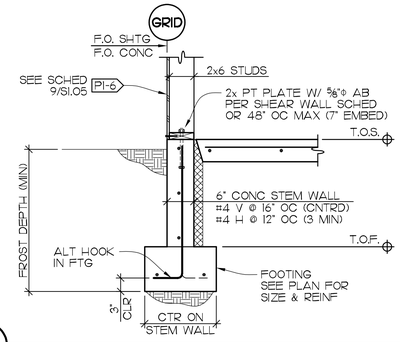


1

3/4"=1'-0"

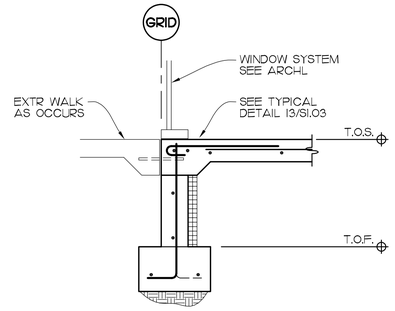


CONDITION @ STOREFRONT

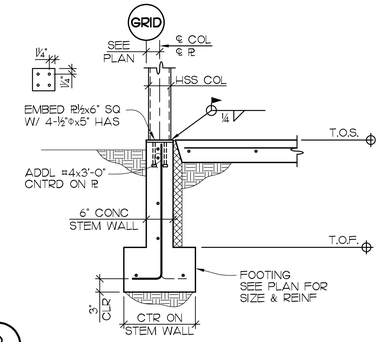


3

3/4"=1'-0"

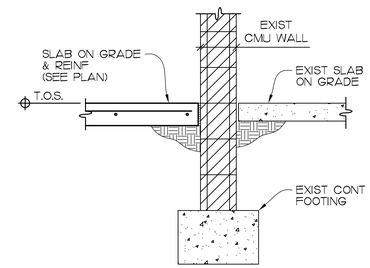


4

3/4"=1'-0"

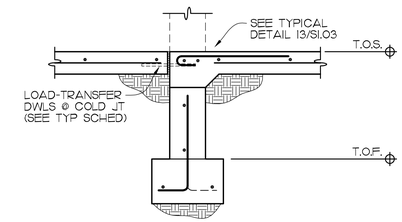


CONDITION @ DOOR

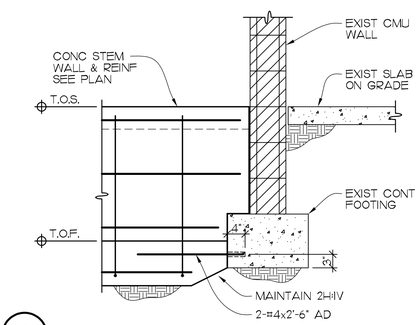


6

3/4"=1'-0"

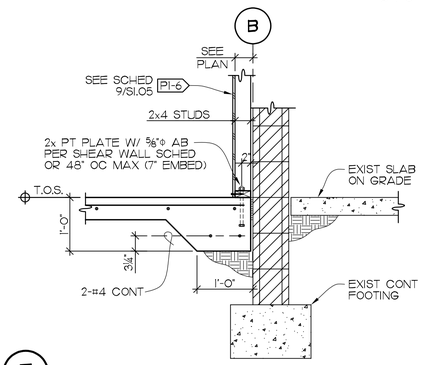


7

3/4"=1'-0"

8

3/4"=1'-0"

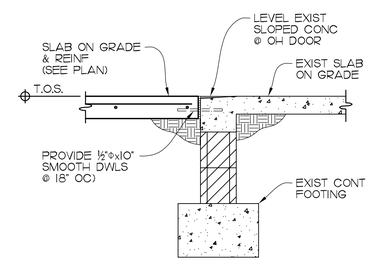


9

3/4"=1'-0"

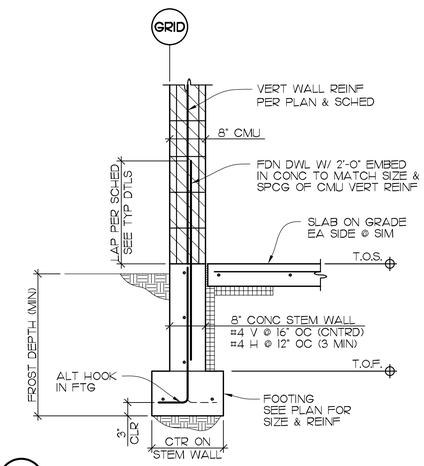


10

3/4"=1'-0"

DESIGN WEST ARCHITECTS, P.A.
• MERIDIAN, IDAHO • PULLMAN, WASHINGTON •
• KENNEWICK, WASHINGTON • ONTARIO, OREGON •
www.designwestpa.com

© COPYRIGHT DESIGN WEST ARCHITECTS P.A. DESIGN CONCEPTS AND DRAWINGS NOT TO BE REUSED WITHOUT WRITTEN PERMISSION OF ARCHITECT

DRAWN BY
CJC

CHECKED BY
LAH

JOB NUMBER
22103

REVISIONS

LSB CONSULTING ENGINEERS
523 EAST THIRD AVENUE
SPOKANE, WA 99202
P 509.323.9292
F 509.747.7115

LAWRENCE A. HAIRR
STATE OF WASHINGTON
31638
REGISTERED PROFESSIONAL ENGINEER
12/20/23

WSU GOLF TEAM
CLUBHOUSE UPGRADE
EXTERIOR & BLDG ADDITION

WASHINGTON STATE UNIVERSITY
PULLMAN, WA 99163

DATE
01/26/2024

SHEET NAME
STRUCT DETAILS

SHEET
S3.01

Harris 1/26/2024 8:54:14 AM

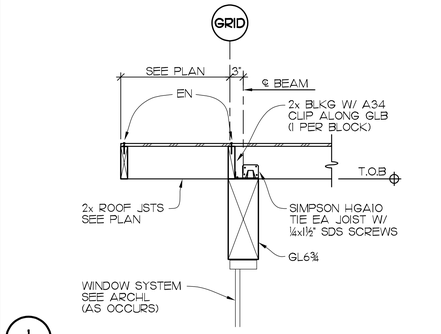


1

¾"=1'-0"

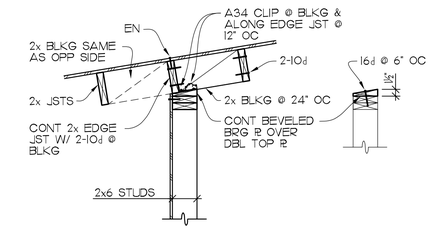


2

¾"=1'-0"

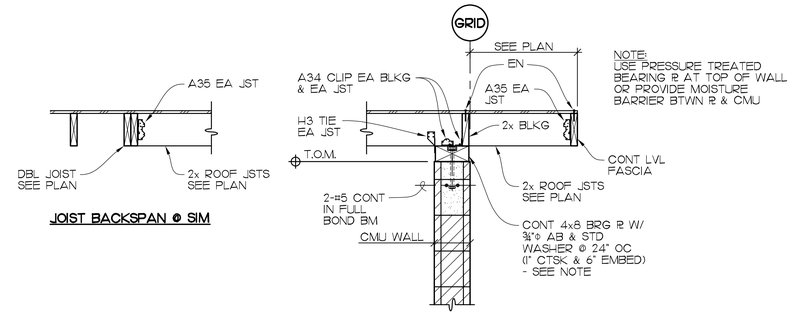


3

¾"=1'-0"

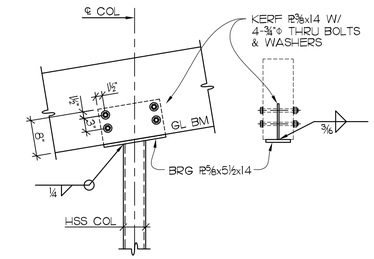


5

¾"=1'-0"

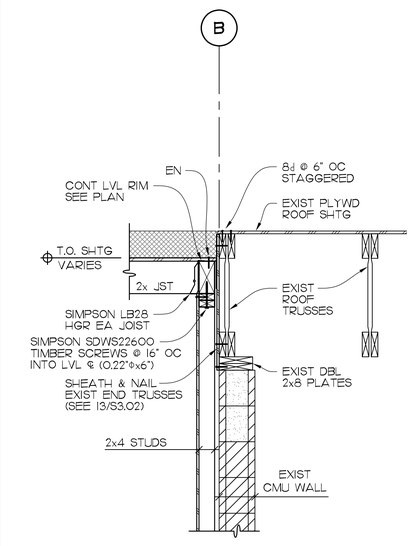


11

¾"=1'-0"

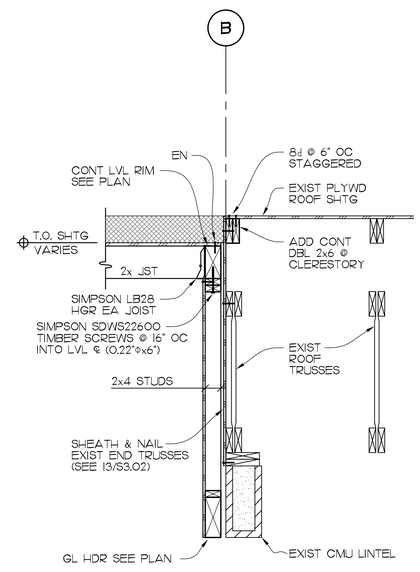


12

¾"=1'-0"

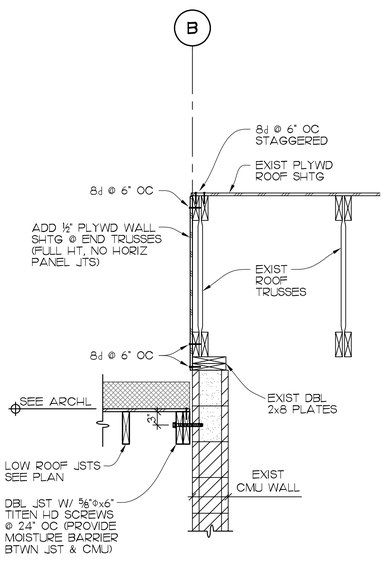


13

¾"=1'-0"

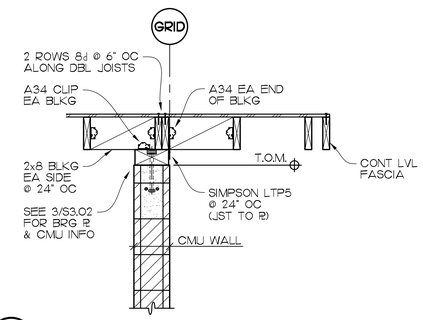


9

¾"=1'-0"

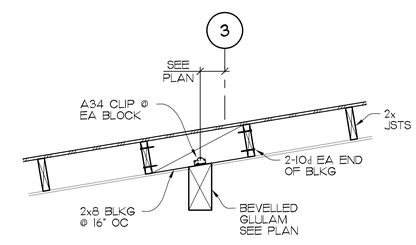


14

¾"=1'-0"

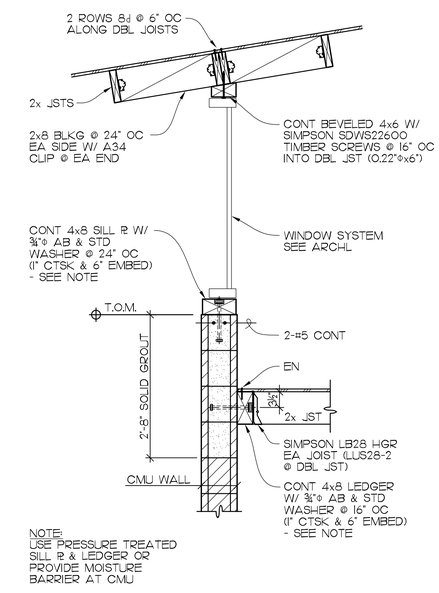


15

¾"=1'-0"

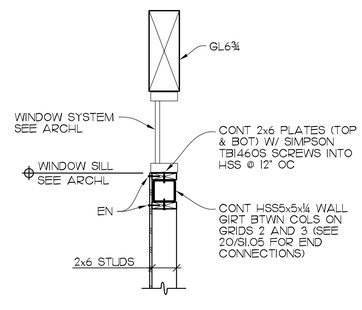


17

¾"=1'-0"

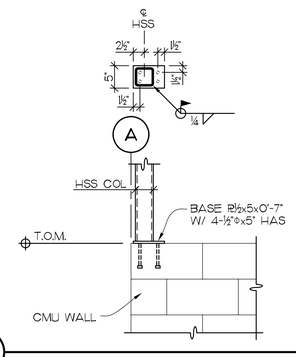


18

¾"=1'-0"

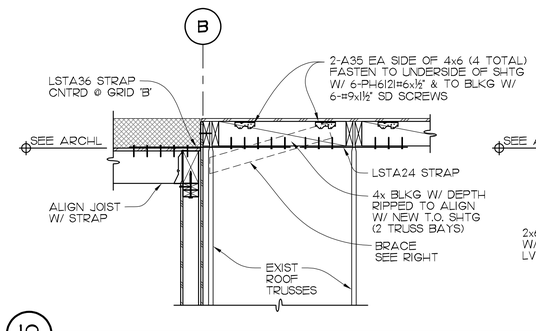


19

¾"=1'-0"

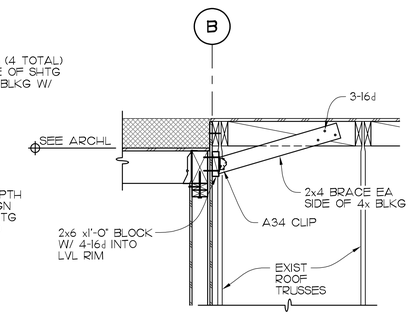



DESIGN WEST ARCHITECTS, P.A.
• MERIDIAN, IDAHO • PULLMAN, WASHINGTON •
• KENNEWICK, WASHINGTON • ONTARIO, OREGON •
www.designwestpa.com



© COPYRIGHT DESIGN WEST ARCHITECTS P.A. DESIGN CONCEPTS AND DRAWINGS NOT TO BE REUSED WITHOUT WRITTEN PERMISSION OF ARCHITECT


DRAWN BY
CJC

CHECKED BY
LAH

JOB NUMBER
22103

REVISIONS


LSB CONSULTING ENGINEERS
523 EAST THIRD AVENUE
SPOKANE, WA 99202
P 509.323.9292
F 509.747.7115


LAWRENCE A. HARRIS
STATE OF WASHINGTON
31638
REGISTERED PROFESSIONAL ENGINEER
12/20/23

WSU GOLF TEAM
CLUBHOUSE UPGRADE
EXTERIOR & BLDG ADDITION
WASHINGTON STATE UNIVERSTIY
PULLMAN, WA 99163

DATE
01/26/2024

SHEET NAME
STRUCT DETAILS

SHEET
S3.02

Harris 12/20/2024 8:04:34 AM

## HVAC CLIMATE DESIGN CRITERIA

| | | |
|---|---|---|
| PROJECT LOCATION | PULLMAN, WA | |
| ASHRAE WEATHER DATA | PULLMAN, WA | SEE NOTE 1 |
| DESIGN ALTITUDE | 2,365 FT | |
| CLIMATE ZONE | 5B | SEE NOTE 2 |
| OUTDOOR DESIGN TEMPS: | HEATING: 4°F DB<br>COOLING: 92°F DB/65°F WB | SEE NOTE 3 |
| INDOOR DESIGN TEMPS: | HEATING: 72°F DB<br>COOLING: 75°F DB/67°F WB | SEE NOTE 4 |

NOTES:
1. CLIMATE DATA PROVIDED BY ASHRAE.
2. PER 2018 WSEC, TABLE C301.1.
3. OUTDOOR DESIGN TEMPS PER 2018 WSEC, C302.2 APPDX C.
4. INDOOR DESIGN TEMPS PER 2018 WSEC, C302.1.

## GENERAL NOTES

1. THE MECHANICAL SYSTEMS SHALL CONSIST OF ALL WORK SHOWN ON THE MECHANICAL DRAWINGS, DIAGRAMS AND AS DESCRIBED IN ASSOCIATED TECHNICAL SPECIFICATIONS.
2. REFER TO SPECIFICATIONS AND ALL OTHER DIVISION DOCUMENTS FOR ADDITIONAL REQUIREMENTS . COORDINATE WORK SHOWN ON THE DRAWINGS WITH THE SPECIFICATIONS. IN CASE OF DISCREPANCY BETWEEN SPECIFICATIONS AND DRAWINGS REFER TO THE GENERAL CONDITIONS AND NOTIFY THE A/E FOR DIRECTION.
3. MECHANICAL CONTRACTOR SHALL COORDINATE WORK WITH ALL OTHER TRADES.
4. MECHANICAL CONTRACTOR SHALL ARRANGE ALL INSPECTIONS AND PAY ALL FEES. SUBMIT COPIES OF INSPECTIONS TO OWNER.
5. ALL MATERIALS SHALL BE NEW AND IN GOOD CONDITION. USED OR DAMAGED MATERIALS, PRODUCTS, ETC. ARE NOT ALLOWED AND IF DISCOVERED SHALL BE REMOVED AND REPLACED.
6. MODEL NUMBERS OF EQUIPMENT SHOWN ON THE SCHEDULES AND THROUGHOUT THE DRAWINGS AND SPECIFICATIONS SHALL NOT BE CONSIDERED COMPLETE AND MATERIAL SHALL NOT BE ORDERED BY MFR/MODEL ALONE. REVIEW THE COMPLETE DESCRIPTION, LOCATION AND ARRANGEMENT ON THE DRAWINGS, NOTES AND SPECIFICATIONS TO DETERMINE THE EXACT MATERIAL, CONFIGURATION AND ACCESSORIES TO BE ORDERED. THE MANUFACTURERS LISTED ARE THE BASIS OF DESIGN.
7. WHEN & WHERE APPLICABLE, THE NEW MECHANICAL EQUIPMENT MAY NOT BE USED FOR TEMPORARY VENTILATION, HEATING, COOLING OR SERVICE UNLESS SPECIFICALLY NOTED OTHERWISE FOR PHASED CONSTRUCTION OR OCCUPANCY.

## LOCATIONS & COORDINATION

1. THE MECHANICAL PLANS ARE DIAGRAMMATIC IN NATURE AND DO NOT ATTEMPT TO SHOW ALL REQUIRED OFFSETS AND FITTINGS. PROVIDE ALL NECESSARY OFFSETS, TRANSITIONS AND FITTINGS REQUIRED FOR A COMPLETE SYSTEM. REFER TO ARCHITECTURAL, STRUCTURAL, PLUMBING AND ELECTRICAL DRAWINGS FOR COORDINATION PURPOSES TO AVOID CONFLICTS.
2. INSTALL ALL MECHANICAL WORK AS HIGH AS POSSIBLE, TIGHT TO STRUCTURE ABOVE, UNLESS NOTED OTHERWISE. IN GENERAL IT IS THE INTENT THAT ALL MECHANICAL SYSTEMS BE CONCEALED ABOVE CEILINGS OR INSIDE WALLS AND SHAFTS.
3. COORDINATE ALL EXPOSED MECHANICAL SYSTEMS SO THAT LOCATIONS AND ROUTING ARE INTEGRATED WITH THE OTHER BUILDING ELEMENTS (WALLS, ROOFS, JOISTS, LIGHTS, ETC.). GENERALLY RUN SYSTEMS PARALLEL OR PERPENDICULAR TO BUILDING ELEMENTS AND RUN IN A MANNER TO CONCEAL OR BLEND WITH BUILDING LINES.
4. PROVIDE NEC CODE MINIMUM HORIZONTAL AND VERTICAL WORKING CLEARANCES FOR ALL ELECTRICAL PANELS AND EQUIPMENT. OFFSET MECHANICAL WORK AS REQUIRED.
5. COORDINATE ALL MECHANICAL WORK WITH THAT OF OTHER TRADES TO ENSURE PROPER INTERFACE, ADEQUATE CLEARANCES, AND TO AVOID CONFLICTS. PROVIDE FIELD COORDINATION AND/OR DRAWINGS PRIOR TO FABRICATION AND/OR INSTALLATION. CONFLICTS AND INTERFERENCES THAT COULD HAVE BEEN AVOIDED BY PROPER PRE-PLANNING AND COORDINATION SHALL BE REMOVED AND CORRECTED AT NO COST TO THE OWNER.
6. FIELD LOCATE ALL ROOF, FLOOR AND WALL PENETRATIONS AND ADJUST TO AVOID CONFLICT WITH STRUCTURAL ELEMENTS, BEAMS, CROSS-BRACING, ARCHITECTURAL ELEMENTS. THE MECHANICAL CONTRACTOR IS RESPONSIBLE FOR LOCATING AND COORDINATING ALL SAW CUTTING AND DRILLING REQUIRED FOR MECHANICAL SYSTEM OPENINGS.

## MECHANICAL & ELECTRICAL COORDINATION

1. INFORMATION LISTED SCHEDULES IS BASED ON THE EQUIPMENT AS SELECTED BY THE ENGINEER DURING THE DESIGN. THE ACTUAL EQUIPMENT SELECTED BY THE CONTRACTOR MAY BE DIFFERENT AND HAVE DIFFERING ELECTRICAL CHARACTERISTICS. PRIOR TO ROUGH-IN OR ORDERING EQUIPMENT, COORDINATE WITH THE ELECTRICAL CONTRACTOR TO ESTABLISH ACTUAL ELECTRICAL CHARACTERISTICS, ELECTRICAL LOAD, VOLTAGE, OVERCURRENT PROTECTION REQUIREMENTS FOR EACH PIECE OF EQUIPMENT, TO ASSURE PROPER ELECTRICAL CONNECTIONS AND SERVICES ARE PROVIDED.
2. COORDINATE THE FURNISHING AND INSTALLATION OF ALL ELECTRICAL DISCONNECT SWITCHES, STARTERS, VFDS, ETC., IN ORDER TO ASSURE THAT ALL ENERGIZED MECHANICAL IS PROVIDED WITH THE REQUIRED CIRCUIT PROTECTION METHODS AND CONTROL DEVICES. WHERE DRAWINGS NOTES, SCHEDULES AND EQUIPMENT SPECIFICATIONS ARE SILENT OR UNCLEAR AS TO WHICH DIVISION (22-PLBG, 23-HVAC, OR 26-ELECTRICAL) IS TO PROVIDE THESE DEVICES, THE CONTRACTOR SHALL CONTACT THE ENGINEER, PRIOR TO BID, FOR DIRECTION.

## DUCTWORK & AIR DISTRIBUTION

1. VOLUME DAMPERS ARE NOT SHOWN FOR CLARITY. PROVIDE A DAMPER FOR EACH SUPPLY, RETURN AND EXHAUST OPENING AND IN BRANCHES WHERE THREE OR MORE OPENINGS ARE ASSOCIATED WITH THE BRANCH AND ELSEWHERE AS NOTED ON THE DRAWINGS OR SPECIFICATIONS.
2. PROVIDE CONCEALED DAMPER REGULATORS FOR ALL VOLUME DAMPERS OVER INACCESSIBLE CEILINGS AND SOFFITS. REFER TO ARCHITECTURAL DRAWINGS FOR CEILING TYPES.
3. PROVIDE DIFFUSER AND GRILLE FRAMES COMPATIBLE WITH ARCHITECTURAL CEILING TYPE. REFER TO ARCHITECTURAL REFLECTED CEILING PLANS FOR CEILING TYPE.
4. INSTALL FIRE DAMPERS, SMOKE DAMPERS AND/OR COMBO FIRE-SMOKE DAMPERS AT ALL LOCATIONS WHERE DUCTS PENETRATE FIRE RATED WALLS. COORDINATE DAMPER ACCESS WITH GENERAL CONTRACTOR AND ELECTRICAL CONNECTIONS WITH ELECTRICAL CONTRACTOR.
5. ALL DUCTWORK SIZES SHOWN ARE OUTSIDE DIMENSIONS, UNLESS SPECIFICALLY NOTED ON PLANS. DUCT LINER HAS BEEN ACCOUNTED FOR ON LINED DUCT. ADDITIONAL CLEARANCE WILL NEED TO BE ACCOUNTED FOR FOR EXTERNALLY INSULATED DUCT.
6. PROVIDE 1" THICK DUCT LINER IN ALL TRANSFER AIR DUCTWORK UNLESS NOTED OTHERWISE.
7. TURNING VANES: ALL RECTANGULAR DUCT ELBOWS SHALL BE PROVIDED WITH TURNING VANES, WHETHER OR NOT SPECIFICALLY SHOWN ON THE DUCTWORK DRAWING PLANS AND SECTIONS.
8. RADIUS ELBOWS (NO VANES): UTILIZE RADIUS ELBOWS ON ALL MATERIAL HANDLING TYPE DUCTWORK, KITCHEN HOOD EXHAUST DUCTS (BOTH TYPE I & II), LOCKER ROOM (LINT) EXHAUST, PATIENT ROOM (LINT) EXHAUST, AND ELSEWHERE AS INDICATED. CONTRACTOR'S OPTION TO UTILIZE RADIUS ELBOWS (WHERE SPACE ALLOWS) IN LIEU OF RECTANGULAR VANED ELBOWS.
9. PROVIDE TRANSITIONS AS REQUIRED TO TO CONNECT DUCTWORK TO TERMINAL UNITS, FANS, AIR HANDLERS CONNECTIONS, ETC.
10. PROVIDE FLEXIBLE DUCT FITTINGS ON CONNECTIONS TO ALL ENERGIZED AIR MOVING EQUIPMENT (FANS, AIR HANDLERS, ETC.).

## SYSTEMS SUPPORTS & BASES

1. HANGERS, SUPPORTS AND ANCHORS FOR MECHANICAL SYSTEMS AND EQUIPMENT ARE NOT NECESSARILY DESIGNED OR SHOWN ON THE DRAWINGS. THE CONTRACTOR SHALL PROVIDE ALL NECESSARY SUPPORT MEMBERS, HANGERS, BRACKETS, HARDWARE, CLEVIS HANGERS, RODS, ETC. TO SECURELY HANG, BRACE AND SUPPORT MECHANICAL SYSTEMS, DUCTWORK, PIPING, EQUIPMENT AND OTHER DEVICES. ANCHOR SUPPORTS TO BUILDING STRUCTURE OR OTHER APPROPRIATE BUILDING ELEMENTS. SEE TYPICAL MECHANICAL DETAILS, ARCHITECTURAL AND STRUCTURAL DRAWINGS FOR ADDITIONAL INFORMATION, LIMITATIONS AND DETAILS.
2. DO NOT ANCHOR TO OR SUSPEND MECHANICAL SYSTEMS DIRECTLY OFF OF BARE METAL ROOF DECKING.

## MECHANICAL ABBREVIATIONS

| | | | |
|---|---|---|---|
| AAV | AUTOMATIC AIR VENT | HW | HOT WATER |
| ABV | ABOVE | HX | HEAT EXCHANGER |
| AD | ACCESS DOOR | HZ | HERTZ |
| AFS | AIR FLOW SWITCH | ID | INSIDE DIAMETER |
| AFF | ABOVE FINISHED FLOOR | INV | INVERT |
| AG | ABOVE GROUND | I.E. | INVERT ELEVATION |
| AHU | AIR HANDLING UNIT | INSUL | INSULATION |
| AL | ACOUSTICALLY LINED | IND | INDIRECT |
| ALUM | ALUMINUM | KW | KILOWATT |
| APD | AIR PRESSURE DROP | KWH | KILOWATT HOUR |
| ARCH | ARCHITECT | LAT | LEAVING AIR TEMPERATURE |
| AVG | AVERAGE | | |
| AWT | AVERAGE WATER TEMPERATURE | LBS | POUNDS |
| | | LDB | LEAVING DRY BULB |
| BAS | BUILDING AUTOMATION SYSTEM | LF | LINEAR FOOT |
| | | LWT | LEAVING WATER TEMPERATURE |
| BDD | BACKDRAFT DAMPER | | |
| BFF | BELOW FINISHED FLOOR | LG | LONG OR LENGTH |
| BFP | BACKFLOW PREVENTER | LP | LOW POINT |
| BG | BELOW GROUND | LWB | LEAVING WET BULB |
| BHP | BRAKE HORSEPOWER | LWG | LOW WALL GRILLE |
| BLDG | BUILDING | LWT | LEAVING WATER TEMPERATURE |
| BP | BYPASS | | |
| BTU | BRITISH THERMAL UNIT | LVG | LEAVING |
| BTUH | BRITISH THERMAL UNITS PER HOUR | MCA | MINIMUM CIRCUIT AMPACITY |
| BOD | BOTTOM OF DUCT | MOCP | MAXIMUM OVERCURRENT PROTECTION |
| BOP | BOTTOM OF PIPE | | |
| BSMT | BASEMENT | MBH | THOUSAND (1000) BTU PER HOUR |
| BV | BALANCING VALVE | | |
| CA | COMBUSTION AIR | MCC | MOTOR CONTROL CENTER |
| CAP | CAPACITY | MFR | MANUFACTURER |
| CC | CENTER TO CENTER OR COOLING COIL | MS | MOTOR STARTER |
| | | MTD | MOUNTED |
| CD | CEILING DIFFUSER | MTG | MOUNTING |
| CFM | CUBIC FEET PER MINUTE | NC | NORMALLY CLOSED |
| CG | CEILING GRILLE | NO | NORMALLY OPEN |
| CI | CAST IRON | MOD | MOTOR-OPERATED DAMPER |
| CLG | CEILING | | |
| COG | CLEAN OUT TO GRADE | NIC | NOT IN CONTRACT |
| CO | CLEAN OUT | NPT | NATIONAL PIPE THREAD |
| COMB | COMBUSTION | NTS | NOT TO SCALE |
| COND | CONDENSATE OR CONDENSER | OA | OUTDOOR AIR |
| | | OBD | OPPOSED BLADE DAMPER |
| CONC | CONCRETE | OD | OUTSIDE DIAMETER |
| CONST | CONSTRUCTION | OSA | OUTSIDE AIR |
| COP | COEFFICIENT OF PERFORMANCE | OAT | OUTSIDE AIR TEMPERATURE |
| CU | COPPER | OF | OVERFLOW |
| CUH | CABINET UNIT HEATER | OFCI | OWNER FURNISHED, CONTRACTOR INSTALLED |
| CW | COLD WATER | | |
| CU | CONDENSING UNIT | | |
| CR | CONDENSATE RETURN | PD | PRESSURE DROP |
| CL | CENTER LINE | PH | PHASE |
| D | DEEP OR DEPTH | PIAC | PRESSURE INDEPENDENT AIR CONTROLLER |
| DB | DRY BULB OR DECIBEL | | |
| DBA | A-WEIGHTED DECIBELS | PG | PROPYLENE GLYCOL |
| DCV | DEMAND CONTROL VENTILATION | PLBG | PLUMBING |
| | | POC | POINT OF CONNECTION |
| DDC | DIRECT DIGITAL CONTROLS | PRV | PRESSURE REDUCING VALVE |
| DEMO | DEMOLITION | PSI | POUNDS PER SQUARE INCH |
| DN | DOWN | | |
| DIA, | DIAMETER Ø | PSIG | POUNDS PER SQUARE INCH GAUGE |
| DPS | DIFFERENTIAL PRESSURE SWITCH | PT | PRESSURE & TEMPERATURE |
| DP | DROP | | |
| DPR | DAMPER | RA | RETURN AIR |
| DWG | DRAWING | RAG | RETURN AIR GRILLE |
| (E) | EXISTING | RAT | RETURN AIR TEMPERATURE |
| EA | EACH OR EXHAUST AIR | | |
| EAT | ENTERING AIR TEMPERATURE | RD | ROOF DRAIN |
| | | RET | RETURN |
| EDB | ENTERING DRY BULB | REV | REVISION |
| EER | ENERGY EFFICIENCY RATIO | RF | RETURN FAN |
| | | RPM | REVOLUTIONS PER MINUTE |
| EF | EXHAUST FAN | | |
| EFF | EFFICIENCY | RTU | ROOF TOP UNIT |
| EG | EXHAUST GRILLE | SA | SUPPLY AIR |
| ELEC | ELECTRIC OR ELECTRICAL | SAT | SUPPLY AIR TEMPERATURE |
| ELEV | ELEVATION | | |
| EMCS | ENERGY MANAGEMENT AND CONTROL SYSTEM | SEER | SEASONAL ENERGY EFFICIENT RATIO |
| ENCL | ENCLOSURE | SENS | SENSIBLE |
| ESP | EXTERNAL STATIC PRESSURE | SD | SMOKE DETECTOR OR DAMPER |
| EST | ESTIMATE(D) | SF | SUPPLY FAN |
| EWB | ENTERING WET BULB | SFD | SMOKE-FIRE DAMPER |
| EWT | ENTERING WATER TEMPERATURE | SHT | SHEET |
| | | SP | STATIC PRESSURE |
| EXH | EXHAUST | SQ | SQUARE |
| FA | FRESH AIR (OUTSIDE AIR) | SQ | FT SQUARE FOOT |
| FCO | FLOOR CLEAN OUT | SS | STAINLESS STEEL |
| FCU | FAN COIL UNIT | STD | STANDARD |
| FD | FIRE DAMPER OR FLOOR DRAIN | TA | TRANSFER AIR |
| | | TEMP | TEMPERATURE |
| FDC | FIRE DEPARTMENT CONNECTION | TH | THICK OR THICKNESS |
| | | TOD | TOP OF DUCT |
| FF | FINAL FILTER | TOP | TOP OF PIPE |
| FLA | FULL LOAD AMPS | TP | TRAP PRIMER |
| FLR | FLOOR | TU | TERMINAL UNIT |
| FOB | FLAT ON BOTTOM | TYP | TYPICAL |
| FOT | FLAT ON TOP | UF | UNDER FLOOR |
| FPM | FEET PER MINUTE | UG | UNDERGROUND |
| FPI | FINS PER INCH | UH | UNIT HEATER |
| FPS | FEET PER SECOND | UR | URINAL |
| FP | FIRE PROTECTION | US | UNDER SLAB |
| FS | FLOOR SINK | V | VENT OR VOLT |
| FT | FEET/FOOT OR FINNED TUBE | VAC | VACUUM |
| | | VAV | VARIABLE AIR VOLUME |
| FV | FACE VELOCITY | VEL | VELOCITY |
| G | GAS (NATURAL) | VFD | VARIABLE FREQUENCY DRIVE |
| GA | GAUGE OR GAGE | | |
| GAL | GALLONS | VRF | VARIABLE REFRIGERANT FLOW |
| GALV | GALVANIZED | | |
| GPM | GALLONS PER MINUTE | VRV | VARIABLE REFRIGERANT VOLUME |
| GPH | GALLONS PER HOUR | | |
| H | HIGH OR HEIGHT | VTR | VENT THRU ROOF |
| HB | HOSE BIBB | VD | VOLUME DAMPER |
| HC | HEATING COIL | WB | WET BULB |
| HD | HEAD | WC | WATER CLOSET |
| HGBP | HOT GAS BYPASS | WCO | WALL CLEAN OUT |
| HL | HIGH LIMIT | WH | WATER HEATER |
| HP | HORSEPOWER OR HIGH POINT | WHA | WATER HAMMER ARRESTOR |
| HR | HOUR | WG | WATER GAUGE |
| HTG | HEATING | WPD | WATER PRESSURE DROP |
| HUM | HUMIDIFIER | WT | WEIGHT |

## HVAC PIPING LEGEND

| | |
|---|---|
| HWS | HEATED WATER SUPPLY |
| HWR | HEATED WATER RETURN |
| CWS | CHILLED WATER SUPPLY |
| CWR | CHILLED WATER RETURN |
| CHS | CHILLER CIRC RETURN |
| CHR | CHILLER CIRC RETURN |
| CD | CONDENSATE DRAIN |
| D | DRAIN |
| PC | PUMPED CONDENSATE |
| RL | REFRIGERANT LIQUID |
| RS | REFRIGERANT SUCTION |
| REF | REFRIGERANT LINE SET |
| G | NATURAL GAS |

## GENERAL PIPING SYMBOLS

- PIPE PITCH DIRECTION (DOWN)
- DIRECTION OF FLOW
- ANCHOR
- REDUCER OR INCREASER
- ECCENTRIC REDUCER
- TOP CONNECTION
- BOTTOM CONNECTION
- SIDE CONNECTION
- CAPPED OUTLET
- RISE OR DROP IN PIPE
- UNION
- PIPE UP
- PIPE DOWN

## VALVE AND EQUIPMENT SYMBOLS

- GENERIC VALVE (TYPE AS SPECIFIED)
- CHECK VALVE
- WYE STRAINER (WITH BALL VALVE & QUICK COUPLE HOSE CONNECTOR)
- FLEXIBLE CONNECTION
- MODULATING CONTROL VALVE
- TWO POSITION CONTROL VALVE
- PRESSURE REGULATING VALVE
- PRESSURE SAFETY RELIEF VALVE
- BALANCING VALVE (MANUAL OR AUTOFLOW AS SPECIFIED)
- PRESSURE REDUCING VALVE (PRV)
- THERMOMETER
- PRESSURE GAGE
- TEST PLUG (PRESSURE/TEMPERATURE)
- AV — AUTOMATIC AIR VENT
- MV — MANUAL AIR VENT
- C — QUICK-COUPLE HOSE CONNECTOR
- A — PLANT COMPRESSED AIR OUTLET QUICK CONNECT
- PUMP

## LINEWEIGHT LEGEND

- LIGHT LINES INDICATES EXISTING ITEMS TO REMAIN
- LIGHT DASHED LINES HIDDEN OR UNDERGROUND ITEMS
- BOLD LINES INDICATES NEW ITEMS
- BOLD DASHED LINES INDICATE EXISTING ITEMS TO BE REMOVED

NOTE:
LINEWEIGHTS ARE GENERAL GUIDES ONLY. REFER TO DRAWING NOTES AND WORK PHASES (DEMO OR NEW) FOR ADDITIONAL DISTINCTIONS.

## HVAC SYMBOLS

- 12x8 — RECT. DUCT SIZE (INCHES) (FACING SIDE LISTED FIRST)
- 12Ø — CIRCULAR DUCT DIAMETER (INCHES)
- 24x18 F.O. — FLAT OVAL DUCT SIZE (INCHES)(FACING SIDE LISTED FIRST)
- ACOUSTICALLY LINED DUCT, 1" THICK UNLESS NOTED OTHERWISE, DUCT SIZE INCLUDES ALLOWANCE FOR LINER
- R — DUCT RISE IN DIRECTION OF ARROW
- D — DUCT DROP IN DIRECTION OF ARROW
- # — FIRE OR FIRE/SMOKE DAMPER (# INDICATES TYPE)
- TURNING VANES
- HIGH EFFICIENCY BRANCH TAP
- FLEXIBLE DUCT CONNECTOR
- VD — VOLUME CONTROL DAMPER (SEE GENERAL NOTES)
- M — MOTORIZED DAMPER & ACTUATOR
- SUPPLY/OSA DUCT TURNED UP
- SUPPLY/OSA DUCT TURNED DOWN
- RETURN AIR DUCT TURNED UP
- RETURN AIR DUCT TURNED DOWN
- EXHAUST/RELIEF DUCT TURNED UP
- EXHAUST/RELIEF DUCT TURNED DOWN
- FLEXIBLE DUCT
- SIDEWALL DIFFUSER/GRILLE
- LINEAR SLOT DIFFUSER
- AIR OUTLET (SUPPLY)
- AIR INLET (RETURN/RELIEF)
- AIR INLET (EXHAUST)
- LOUVER
- T A — THERMOSTAT OR TEMPERATURE SENSOR (SUBSCRIPT A=AVERAGING, G=PROTECTIVE GUARD, C=CO2 SENSOR)
- H — HUMIDISTAT OR HUMIDITY SENSOR
- CO2 — CARBON DIOXIDE SENSOR
- SD — SMOKE DETECTOR

## GENERAL SYMBOLS

- 1 / M5.01 — CROSS-SECTION SYMBOL: SECTION IDENTIFYING NUMBER; SHEET WHERE SECTION IS SHOWN
- 1 / M6.01 — DETAIL SYMBOL: DETAIL IDENTIFYING NUMBER; SHEET WHERE DETAIL IS SHOWN
- POINT OF CONNECTION (POC) SYMBOL
- AHU-1 / AHU-1 — EQUIP. TYPE-NUMBER (SEE SCHEDULES); EQUIPMENT IDENTIFIER (OPTIONAL TAG STYLE)
- SIZE # CFM — DIFFUSER OR REGISTER/GRILLE TAG: CFM VALUE; DIFFUSER TYPE (SEE SCHEDULES); DIFFUSER SIZE
- 1 — REVISION CLOUD AND REVISION NUMBER

NOTE: SYMBOLS AND ABBREVIATIONS ON THE DRAWINGS ARE TO BE INTERPRETED IN ACCORDANCE WITH THE LEGENDS ON THIS SHEET. NOT ALL SYMBOLS AND ABBREVIATIONS INDICATED ON THIS SHEET ARE NECESSARILY USED FOR THIS PROJECT.


DESIGN WEST ARCHITECTS, P.A.
• MERIDIAN, IDAHO • PULLMAN, WASHINGTON •
• KENNEWICK, WASHINGTON • ONTARIO, OREGON •
www.designwestpa.com


© COPYRIGHT DESIGN WEST ARCHITECTS P.A. DESIGN CONCEPTS AND DRAWINGS NOT TO BE REUSED WITHOUT WRITTEN PERMISSION OF ARCHITECT


DRAWN BY MRH
CHECKED BY ASD
JOB NUMBER 22103
REVISIONS


MSI ENGINEERS
www.msi-engineers.com


AARON S. DONNELLY — STATE OF WASHINGTON — 43373 — REGISTERED PROFESSIONAL ENGINEER

**WSU GOLF TEAM CLUBHOUSE UPGRADE EXTERIOR & BLDG ADDITION**
**WASHINGTON STATE UNIVERSTIY PULLMAN, WA 99163**

DATE **12/21/2023**

SHEET NAME: NOTES, LEGENDS, AND ABBREV.

SHEET M0.01


Aaron Donnelly 10/20/2024 9:03:54 AM
P:\2022\22-88 WSU Golf Addition\CAD_ACAD\22-88 M0.01.dwg on Mon, January 29 2024 at 09:03 AM

## EXHAUST FAN SCHEDULE

| # | MFR | MODEL | TYPE | SERVICE | CFM | ESP (") | DRIVE | FAN RPM | ELECTRICAL V/PH | ELECTRICAL MCA | ELECTRICAL MCA | WEIGHT (LBS) | NOTES |
|---|---|---|---|---|---|---|---|---|---|---|---|---|---|
| EF-1 | PANASONIC | WHISPER GREEN SELECT FV-1115VKZ | CEILING MOUNT | BATHROOM EXHAUST | 150 | 0.1 | DIRECT ECM | 700 | 120/1 | 0.53 | 15 | 15 | 1 |

NOTES:

1. PROVIDE WITH THE FOLLOWING:
   - CLASS 1 MOTORIZED EXHAUST DAMPER TO OPEN WHEN FAN RUNS
   - FACTORY DISCONNECT
   - EC MOTOR WITH MANUAL SPEED ADJUSTMENT DIAL ON MOTOR (CAPABLE OF CONTROL BY OTHERS)

## AIR OUTLETS SCHEDULE

| # | MFR | MODEL | SERVICE | TYPE | MATERIAL | MOUNTING | BORDER | PATTERN | FINISH | OTHER | NOTES |
|---|---|---|---|---|---|---|---|---|---|---|---|
| 1 | PRICE | 535 | RETURN/ TRANSFER/ EXHAUST | GRILLE | STEEL | CEILING/ SURFACE | FOR APPLICATION | 45° FIXED | WHITE | 1/2" BLADE SPACING | 1 2 3 |

NOTES:

1. PAINT THE INSIDE SURFACE OF THE DUCTWORK CONNECTION FLAT BLACK, UNLESS OTHERWISE PROVIDED WITH DUCT LINER.
2. PROVIDE BALANCING DAMPER IN BRANCH DUCT SERVING AIR OUTLET AT TAKEOFF FROM TRUNK DUCT.
3. PROVIDE TRANSITION FROM AIR OUTLET NECK TO BRANCH DUCT AS REQUIRED.

## ELECTRIC HEATER SCHEDULE

| # | MFR | MODEL | MOUNTING | COLOR | ELECTRICAL WATTS | ELECTRICAL V/PH | NOTES |
|---|---|---|---|---|---|---|---|
| EH-1 | BERKO | FRC | RECESSED WALL 12" AFF | NORTHERN WHITE | 3000 | 208/1 | 1 |
| EH-2 | BERKO | GFR | RECESSED WALL 12" AFF | NORTHERN WHITE | 1500 | 208/1 | 1 |
| EH-3 | BERKO | HUHTA | SUSPENDED 8' AFF | NORTHERN WHITE | 2000 | 208/1 | 1 |
| EH-4 | BERKO | SRA | RECESSED WALL 12" AFF | NORTHERN WHITE | 1500 | 208/1 | |

NOTES:

1. PROVIDE WITH BUILT-IN TAMPER-RESISTANT T-STAT AND CONCEALED POWER ON/OFF SWITCH FOR MAINTENANCE


DESIGN WEST ARCHITECTS, P.A.
• MERIDIAN, IDAHO • PULLMAN, WASHINGTON •
• KENNEWICK, WASHINGTON • ONTARIO, OREGON •
www.designwestpa.com



© COPYRIGHT DESIGN WEST ARCHITECTS P.A. DESIGN CONCEPTS AND DRAWINGS NOT TO BE REUSED WITHOUT WRITTEN PERMISSION OF ARCHITECT


DRAWN BY
MRH

CHECKED BY
ASD

JOB NUMBER
22103

REVISIONS


MSI ENGINEERS
www.msi-engineers.com


AARON S. DONNELLY
STATE OF WASHINGTON
43373
REGISTERED
PROFESSIONAL ENGINEER

**WSU GOLF TEAM CLUBHOUSE UPGRADE EXTERIOR & BLDG ADDITION**

**WASHINGTON STATE UNIVERSTIY PULLMAN, WA 99163**

DATE
**1/26/2024**

SHEET NAME
MECHANICAL EQUIPMENT SCHEDULES

SHEET
M1.01


Aaron Donnelly 1/29/2024 9:03:58 AM
P:\2022\22-88 WSU Golf Addition\CAD_ACAD\22-88 M1.01.dwg on Mon, January 29 2024 at 09:03 AM

## KEY NOTES

1. FAN TO BE CONTROLLED BY LIGHTING CIRCUIT (ENABLE WHEN LIGHTS TURN ON). COORDINATE WITH DIV 26.
2. EXHAUST THROUGH SIDEWALL WITH STAINLESS STEEL VENT CAP WTITH INTEGRAL BACKDRAFT DAMPER (SEIHO MODEL RCC-S OR EQUAL)
3. ELECTRIC HEATERS TO BE CONTROLLED BY INTERNAL TAMPER-PROOF THERMOSTAT. SET TO 55 DEGREES.

1 FLOOR PLAN - HVAC
Scale: 1/4" = 1' - 0"


DESIGN WEST ARCHITECTS, P.A.
• MERIDIAN, IDAHO • PULLMAN, WASHINGTON •
• KENNEWICK, WASHINGTON • ONTARIO, OREGON •
www.designwestpa.com



© COPYRIGHT DESIGN WEST ARCHITECTS P.A. DESIGN CONCEPTS AND DRAWINGS NOT TO BE REUSED WITHOUT WRITTEN PERMISSION OF ARCHITECT


DRAWN BY
MRH

CHECKED BY
ASD

JOB NUMBER
22103

REVISIONS

MSI ENGINEERS
www.msi-engineers.com

AARON S. DONNELLY
STATE OF WASHINGTON
53373
REGISTERED
PROFESSIONAL ENGINEER

**WSU GOLF TEAM**
**CLUBHOUSE UPGRADE**
**EXTERIOR & BLDG ADDITION**
**WASHINGTON STATE UNIVERSTIY**
**PULLMAN, WA 99163**

DATE
**1/26/2024**

SHEET NAME
FLOOR PLAN
HVAC

SHEET
M3.30


Aaron Donnelly 1/29/2024 9:04:03 AM
P:\2022\22-88 WSU Golf Addition\CAD_ACAD\22-88 M3.30.dwg on Mon, January 29 2024 at 09:04 AM

## HANGERS AND SUPPORTS

1. HANGERS, SUPPORTS AND ANCHORS FOR MECHANICAL AND PLUMBING SYSTEMS AND EQUIPMENT ARE NOT NECESSARILY DESIGNED OR SHOWN ON THE DRAWINGS. THE CONTRACTOR SHALL PROVIDE ALL NECESSARY SUPPORT MEMBERS, HANGERS, BRACKETS, HARDWARE, CLEVIS HANGERS, RODS, ETC. TO SECURELY HANG, BRACE AND SUPPORT MECHANICAL SYSTEMS, DUCTWORK, PIPING, EQUIPMENT AND OTHER DEVICES. ANCHOR SUPPORTS TO BUILDING STRUCTURE OR OTHER APPROPRIATE BUILDING ELEMENTS. SEE TYPICAL MECHANICAL DETAILS ARCHITECTURAL AND/OR STRUCTURAL DRAWINGS FOR ADDITIONAL INFORMATION, LIMITATIONS AND DETAILS.

2. DO NOT ANCHOR TO OR SUSPEND EQUIPMENT, DUCTWORK OR PIPING DIRECTLY OFF OF BARE METAL ROOF DECKING.

## PLUMBING PIPING

1. SMALL PIPING OR COMPONENTS: PIPING PLANS DO NOT NECESSARILY SHOW ALL SMALL PIPING OR COMPONENTS, INSTRUMENT TAPS OR DRAINS. PROVIDE ALL PIPING, VALVES, SPECIALTY ITEMS, INSTRUMENTATION, ETC. AS INDICATED ON THE PIPING FLOW DIAGRAMS, PIPING/EQUIPMENT DETAILS AND/OR CONTROL/INSTRUMENTATION DIAGRAMS.

## TESTING, BALANCING AND COMMISSIONING

1. MECHANICAL SYSTEMS SHALL BE BALANCED IN ACCORDANCE WITH THE 2018 WA STATE ENERGY CODE, THE PROJECT SPECIFICATIONS AND GENERALLY ACCEPTED ENGINEERING STANDARDS TO ENSURE AT A MINIMUM THAT FLOW RATES ARE MEASURED AND ADJUSTED TO DELIVER THE DESIGN RATES WITHIN SPECIFIED TOLERANCES.

## LOCATIONS & COORDINATION

1. THE MECHANICAL AND PLUMBING PLANS ARE DIAGRAMMATIC IN NATURE AND DO NOT ATTEMPT TO SHOW ALL REQUIRED OFFSETS AND FITTINGS. PROVIDE ALL NECESSARY OFFSETS, TRANSITIONS AND FITTINGS REQUIRED FOR A COMPLETE SYSTEM. REFER TO ARCHITECTURAL, STRUCTURAL, PLUMBING AND ELECTRICAL DRAWINGS FOR COORDINATION PURPOSES TO AVOID CONFLICTS.

2. INSTALL ALL MECHANICAL AND PLUMBING WORK AS HIGH AS POSSIBLE, TIGHT TO STRUCTURE ABOVE, UNLESS NOTED OTHERWISE. IN GENERAL IT IS THE INTENT THAT ALL MECHANICAL SYSTEMS BE CONCEALED ABOVE CEILINGS OR INSIDE WALLS AND SHAFTS.

3. COORDINATE ALL EXPOSED MECHANICAL SYSTEMS, PIPING AND DUCTWORK SO THAT LOCATIONS AND ROUTING ARE INTEGRATED WITH THE OTHER BUILDING ELEMENTS (WALLS, ROOFS, JOISTS, LIGHTS, ETC.). GENERALLY RUN SYSTEMS PARALLEL OR PERPENDICULAR TO BUILDING ELEMENTS AND RUN IN A MANNER TO CONCEAL OR BLEND WITH BUILDING LINES.

4. PROVIDE NEC CODE MINIMUM HORIZONTAL AND VERTICAL WORKING CLEARANCES FOR ALL ELECTRICAL PANELS AND EQUIPMENT. OFFSET MECHANICAL WORK AS REQUIRED.

5. COORDINATE ALL WORK WITH THAT OF OTHER TRADES TO ENSURE PROPER INTERFACE, ADEQUATE CLEARANCES, AND TO AVOID CONFLICTS. PROVIDE FIELD COORDINATION AND/OR DRAWINGS PRIOR TO FABRICATION AND/OR INSTALLATION. CONFLICTS AND INTERFERENCES THAT COULD HAVE BEEN AVOIDED BY PROPER PRE-PLANNING AND COORDINATION SHALL BE REMOVED AND CORRECTED AT NO COST TO THE OWNER.

6. FIELD LOCATE ALL ROOF, FLOOR AND WALL PENETRATIONS AND ADJUST TO AVOID CONFLICT WITH STRUCTURAL ELEMENTS, BEAMS, CROSS-BRACING, ARCHITECTURAL ELEMENTS. DIV. 23/22 CONTRACTOR RESPONSIBLE FOR LOCATING AND COORDINATING ALL SAW CUTTING AND DRILLING REQUIRED FOR MECHANICAL SYSTEM OPENINGS.

## ELECTRICAL COORDINATION

1. INFORMATION LISTED IN EQUIPMENT SCHEDULES IS BASED ON THE EQUIPMENT AS SELECTED BY THE ENGINEER DURING THE DESIGN PROCESS. THE ACTUAL EQUIPMENT SELECTED BY THE CONTRACTOR MAY BE DIFFERENT AND HAVE DIFFERING ELECTRICAL CHARACTERISTICS. PRIOR TO ROUGH-IN OR ORDERING EQUIPMENT, COORDINATE WITH THE ELECTRICAL CONTRACTOR TO ESTABLISH ACTUAL ELECTRICAL CHARACTERISTICS, ELECTRICAL LOAD, VOLTAGE, OVERCURRENT PROTECTION REQUIREMENTS FOR EACH PIECE OF EQUIPMENT, TO ASSURE PROPER ELECTRICAL CONNECTIONS AND SERVICES ARE PROVIDED.

2. COORDINATE THE FURNISHING AND INSTALLATION OF ALL ELECTRICAL DISCONNECT SWITCHES, STARTERS, VFDS, ETC., IN ORDER TO ASSURE THAT ALL ENERGIZED MECHANICAL IS PROVIDED WITH THE REQUIRED CIRCUIT PROTECTION METHODS AND CONTROL DEVICES. WHERE DRAWINGS NOTES, SCHEDULES AND EQUIPMENT SPECIFICATIONS ARE SILENT OR UNCLEAR AS TO WHICH DIVISION (22-PLBG, 23-HVAC, OR 26-ELECTRICAL) IS TO PROVIDE THESE DEVICES, THE CONTRACTOR SHALL CONTACT THE ENGINEER, PRIOR TO BID, FOR DIRECTION.

## GENERAL NOTES

1. THE MECHANICAL & PLUMBING SYSTEM SHALL CONSIST OF ALL WORK SHOWN ON DRAWINGS, DIAGRAMS AND AS DESCRIBED IN SPECIFICATIONS.

2. COORDINATE WITH SPECIFICATIONS. IN CASE OF DISCREPANCY BETWEEN SPECIFICATIONS AND DRAWINGS REFER TO THE GENERAL CONDITIONS AND NOTIFY THE A/E FOR DIRECTION.

3. INSTALL ALL MECHANICAL WORK AS HIGH AS POSSIBLE, TIGHT TO STRUCTURE ABOVE. COORDINATE ALL EXPOSED MECHANICAL SYSTEMS, PIPING AND DUCTWORK SO THAT LOCATIONS AND ROUTING ARE INTEGRATED WITH THE OTHER BUILDING ELEMENTS (WALLS, ROOFS, JOISTS, LIGHTS, ETC.). GENERALLY RUN SYSTEMS PARALLEL OR PERPENDICULAR TO BUILDING ELEMENTS AND RUN IN A MANNER TO CONCEAL OR BLEND WITH BUILDING LINES.

4. THE MECHANICAL PLANS ARE DIAGRAMMATIC IN NATURE AND DO NOT ATTEMPT TO SHOW ALL REQUIRED OFFSETS AND FITTINGS. PROVIDE TRANSITIONS AS REQUIRED TO CONNECT DUCTWORK TO AIR TERMINAL UNITS, FAN AND OTHER MECHANICAL EQUIPMENT AND PROVIDE ALL NECESSARY OFFSETS, TRANSITIONS AND FITTINGS REQUIRED FOR A COMPLETE SYSTEM. REFER TO ARCHITECTURAL, STRUCTURAL, PLUMBING AND ELECTRICAL DRAWINGS FOR COORDINATION PURPOSES TO AVOID CONFLICTS.

5. PROVIDE NEC CODE MINIMUM HORIZONTAL AND VERTICAL WORKING CLEARANCES FOR ALL ELECTRICAL PANELS AND EQUIPMENT. OFFSET MECHANICAL WORK AS REQUIRED.

6. COORDINATE ALL MECHANICAL WORK WITH THAT OF OTHER TRADES TO ENSURE PROPER INTERFACE, ADEQUATE CLEARANCES, AND TO AVOID CONFLICTS. PROVIDE FIELD COORDINATION AND/OR DRAWINGS PRIOR TO FABRICATION AND/OR INSTALLATION. CONFLICTS AND INTERFERENCES THAT COULD HAVE BEEN AVOIDED BY PROPER PRE-PLANNING AND COORDINATION SHALL BE REMOVED AND CORRECTED AT NO COST TO THE OWNER.

7. FIELD LOCATE ALL ROOF, FLOOR AND WALL PENETRATIONS AND ADJUST TO AVOID CONFLICT WITH STRUCTURAL ELEMENTS, BEAMS, CROSS-BRACING, ARCHITECTURAL ELEMENTS. DIV. 23/22 CONTRACTOR RESPONSIBLE FOR LOCATING AND COORDINATING ALL SAW CUTTING AND DRILLING REQUIRED FOR MECHANICAL SYSTEM OPENINGS.

8. ALL REQUIRED FIRESTOPPING FOR DUCT AND PIPE PENETRATIONS THROUGH FIRE RATED ASSEMBLIES SHALL BE PROVIDED AND INSTALLED BY THE CONTRACTOR IN ACCORDANCE WITH THE APPROPRIATE SPECIFICATION SECTIONS FOR FIRESTOPPING MATERIALS AND METHODS.

9. PROVIDE ALL NECESSARY SUPPORT MEMBERS, HANGERS, BRACKETS, HARDWARE, CLEVIS HANGERS, RODS, ETC. TO SECURELY HANG, BRACE AND SUPPORT MECHANICAL SYSTEMS, DUCTWORK, PIPING, EQUIPMENT AND OTHER DEVICES. ANCHOR SUPPORTS TO BUILDING STRUCTURE OR OTHER APPROPRIATE BUILDING ELEMENTS. SEE TYPICAL MECHANICAL DETAILS ARCHITECTURAL AND/OR STRUCTURAL DRAWINGS FOR ADDITIONAL INFORMATION, LIMITATIONS AND DETAILS.

10. ITEMS NOTED "TYPICAL" OR "TYP" ON ANY SHEET APPLY TO THAT PARTICULAR SHEET.

11. PLENUMS: PIPES AND WIRING IN PLENUMS SHALL BE RATED FOR PLENUM USE. PVC, ABS, PLASTIC PIPING IS NOT ACCEPTABLE IN PLENUM APPLICATIONS.

12. MODEL NUMBERS OF EQUIPMENT SHOWN ON THE SCHEDULES AND THROUGHOUT THE DRAWINGS AND SPECIFICATIONS SHALL NOT BE CONSIDERED COMPLETE AND MATERIAL SHALL NOT BE ORDERED BY MFR/MODEL ALONE. REVIEW THE COMPLETE DESCRIPTION, NOTES AND SPECIFICATIONS TO DETERMINE THE EXACT MATERIAL AND ACCESSORIES TO BE ORDERED. THE MANUFACTURERS LISTED ARE THE BASIS OF DESIGN.

13. ALL INSULATED PIPING EXPOSED TO VIEW IN OCCUPIED SPACES SHALL BE PROVIDED WITH PVC JACKETING.

14. PROVIDE TRAP PRIMERS ON ALL FLOOR DRAINS AND FLOOR SINKS, UNLESS NOTED OTHERWISE. TRAP PRIMER SOURCES SHALL BE EITHER FROM AUTOMATIC, ELECTRONIC TRAP PRIMER UNITS LOCATED IN THE VICINITY (FOR CLUSTERS OF MULTIPLE DRAINS), WATER CLOSET FLUSH VALVE TAPS, SINK TAIL PIECE BRANCHES, OR PRESSURE DROP OPERATED UNITS AS BEST FITS THE SITUATION. ALL FLOOR DRAINS AND FLOOR SINKS IN KITCHENS, MECHANICAL MEZZANINES, AND MECHANICAL ROOMS ARE REQUIRED TO BE INSTALLED WITH AUTOMATIC ELECTRONIC TRAP PRIMER UNITS.

15. PROVIDE WATER HAMMER ARRESTORS IN HOT AND COLD WATER SERVING ALL RESTROOMS. PROVIDE WATER HAMMER ARRESTORS AT ALL FLUSH VALVE, AND QUICK ACTING VALVE LOCATIONS. PROVIDE WATER HAMMER ARRESTORS AT ALL FIXTURES LOCATED AT THE END OF MAIN AND BRANCH PIPING RUNS. PROVIDE WATER HAMMER ARRESTORS IN WATER SUPPLY LINES TO REMOTE LOCATED SINKS AND WATER SUPPLY LINES TO FAST ACTING VALVES. PROVIDE AN ACCESS PANEL WHERE REQUIRED FOR ACCESS TO WATER HAMMER ARRESTORS.

16. PROVIDE RPBA'S AS REQUIRED BY CODE. RPBA'S TO BE PROVIDED FOR, BUT NOT LIMITED TO, THE FOLLOWING:
    A. HOSE BIBBS LOCATED IN MECHANICAL ROOMS, MECHANICAL YARDS, AND/OR IN DUMPSTER LOCATIONS
    B. FUME HOODS
    C. COMBI OVENS

    RPBA'S TO BE ACCESSIBLE FOR MAINTENANCE. INSTALL AT A MAXIMUM OF 5'-0" AFF.

## ABBREVIATIONS

| | |
|---|---|
| AAV | AUTOMATIC AIR VENT |
| ABV | ABOVE |
| ACCU | AIR COOLED CONDENSING UNIT |
| AD | ACCESS DOOR |
| AFS | AIR FLOW SWITCH |
| AFF | ABOVE FINISHED FLOOR |
| AG | ABOVE GROUND |
| AHU | AIR HANDLING UNIT |
| AL | ACOUSTICALLY LINED |
| ALUM | ALUMINUM |
| APD | AIR PRESSURE DROP |
| ARCH | ARCHITECT |
| AVG | AVERAGE |
| AWT | AVERAGE WATER TEMPERATURE |
| BAS | BUILDING AUTOMATION SYSTEM |
| BDD | BACKDRAFT DAMPER |
| BFF | BELOW FINISHED FLOOR |
| BFP | BACKFLOW PREVENTER |
| BG | BELOW GROUND |
| BHP | BRAKE HORSEPOWER |
| BLDG | BUILDING |
| BP | BYPASS |
| BTU | BRITISH THERMAL UNIT |
| BTUH | BRITISH THERMAL UNITS PER HOUR |
| BOD | BOTTOM OF DUCT |
| BOP | BOTTOM OF PIPE |
| BSMT | BASEMENT |
| BV | BALANCING VALVE |
| C | CELSIUS |
| CA | COMBUSTION AIR |
| CAP | CAPACITY |
| CC | CENTER TO CENTER OR COOLING COIL |
| CD | CEILING DIFFUSER |
| CFM | CUBIC FEET PER MINUTE |
| CG | CEILING GRILLE |
| CI | CAST IRON |
| CLG | CEILING |
| COG | CLEAN OUT TO GRADE |
| CO | CLEAN OUT |
| COMB | COMBUSTION |
| COND | CONDENSATE OR CONDENSER |
| CONC | CONCRETE |
| CONST | CONSTRUCTION |
| COP | COEFFICIENT OF PERFORMANCE |
| CU | COPPER |
| CUH | CABINET UNIT HEATER |
| CW | COLD WATER |
| CU | CONDENSING UNIT |
| CR | CONDENSATE RETURN |
| CL | CENTER LINE |
| D | DEEP OR DEPTH |
| DB | DRY BULB OR DECIBEL |
| DBA | A-WEIGHTED DECIBELS |
| DDC | DIRECT DIGITAL CONTROLS |
| DEMO | DEMOLITION |
| DN | DOWN |
| DIA, | DIAMETER Ø |
| DPS | DIFFERENTIAL PRESSURE SWITCH |
| DP | DROP |
| DPR | DAMPER |
| DWG | DRAWING |
| (E) | EXISTING |
| EA | EACH OR EXHAUST AIR |
| EAT | ENTERING AIR TEMPERATURE |
| EDB | ENTERING DRY BULB |
| EER | ENERGY EFFICIENCY RATIO |
| EF | EXHAUST FAN |
| EFF | EFFICIENCY |
| EG | EXHAUST GRILLE |
| ELEC | ELECTRIC OR ELECTRICAL |
| ELEV | ELEVATION |
| EMCS | ENERGY MANAGEMENT AND CONTROL SYSTEM |
| ENCL | ENCLOSURE |
| EQUIP | EQUIPMENT |
| ESP | EXTERNAL STATIC PRESSURE |
| EST | ESTIMATE(D) |
| EWB | ENTERING WET BULB |
| EWT | ENTERING WATER TEMPERATURE |
| EXH | EXHAUST |
| F | FAHRENHEIT |
| FA | FRESH AIR (OUTSIDE AIR) |
| FCO | FLOOR CLEAN OUT |
| FCU | FAN COIL UNIT |
| FD | FIRE DAMPER OR FLOOR DRAIN |
| FDC | FIRE DEPARTMENT CONNECTION |
| FF | FINAL FILTER |
| FLA | FULL LOAD AMPS |
| FLR | FLOOR |
| FLEX | FLEXIBLE |
| FOB | FLAT ON BOTTOM |
| FOT | FLAT ON TOP |
| FPM | FEET PER MINUTE |
| FPI | FINS PER INCH |
| FPS | FEET PER SECOND |
| FP | FIRE PROTECTION |
| FS | FLOOR SINK |
| FT | FEET/FOOT OR FINNED TUBE |
| FV | FACE VELOCITY |
| G | GAS (NATURAL) |
| GA | GAUGE OR GAGE |
| GAL | GALLONS |
| GALV | GALVANIZED |
| GPM | GALLONS PER MINUTE |
| GPH | GALLONS PER HOUR |
| GYP | GYPSUM WALL BOARD |
| H | HIGH OR HEIGHT |
| HB | HOSE BIBB |
| HC | HEATING COIL |
| HD | HEAD |
| HGBP | HOT GAS BYPASS |
| HL | HIGH LIMIT |
| HP | HORSEPOWER OR HIGH POINT |
| HR | HOUR |
| HTG | HEATING |
| HUM | HUMIDIFIER |
| HVAC | HEATING, VENTILATING AND AIR CONDITIONING |
| HW | HOT WATER |
| HX | HEAT EXCHANGER |
| HZ | HERTZ |
| ID | INSIDE DIAMETER |
| INV | INVERT |
| I.E. | INVERT ELEVATION |
| INSUL | INSULATION |
| IND | INDIRECT |
| KW | KILOWATT |
| KWH | KILOWATT HOUR |
| L | LENGTH OR LOUVER |
| LAT | LEAVING AIR TEMPERATURE |
| LBS | POUNDS |
| LDB | LEAVING DRY BULB |
| LF | LINEAR FOOT |
| LWT | LEAVING WATER TEMPERATURE |
| LG | LONG OR LENGTH |
| L/P | LOW POINT |
| LWB | LEAVING WET BULB |
| LWG | LOW WALL GRILLE |
| LWT | LEAVING WATER TEMPERATURE |
| LVG | LEAVING |
| MCA | MINIMUM CIRCUIT AMPACITY |
| MOCP | MAXIMUM OVERCURRENT PROTECTION |
| MBH | THOUSAND (1000) BTU PER HOUR |
| MCC | MOTOR CONTROL CENTER |
| MFR | MANUFACTURER |
| MS | MOTOR STARTER |
| MTD | MOUNTED |
| MTG | MOUNTING |
| MAU | MAKE-UP AIR UNIT |
| NC | NORMALLY CLOSED |
| NO | NORMALLY OPEN |
| MOD | MOTOR-OPERATED DAMPER |
| NIC | NOT IN CONTRACT |
| NPT | NATIONAL PIPE THREAD |
| NTS | NOT TO SCALE |
| OA | OUTDOOR AIR |
| OBD | OPPOSED BLADE DAMPER |
| OD | OUTSIDE DIAMETER |
| OSA | OUTSIDE AIR |
| OAT | OUTSIDE AIR TEMPERATURE |
| OF | OVERFLOW |
| OFCI | OWNER FURNISHED, CONTRACTOR INSTALLED |
| PD | PRESSURE DROP |
| PH | PHASE |
| PIAC | PRESSURE INDEPENDENT AIR CONTROLLER |
| PG | PROPYLENE GLYCOL |
| PLBG | PLUMBING |
| POC | POINT OF CONNECTION |
| PRV | PRESSURE REDUCING VALVE |
| PSI | POUNDS PER SQUARE INCH |
| PSIG | POUNDS PER SQUARE INCH GAUGE |
| PT | PRESSURE & TEMPERATURE |
| RA | RETURN AIR |
| RAG | RETURN AIR GRILLE |
| RAT | RETURN AIR TEMPERATURE |
| RD | ROOF DRAIN |
| RET | RETURN |
| REV | REVISION |
| RF | RETURN FAN |
| RPM | REVOLUTIONS PER MINUTE |
| RHW | RECIRCULATING HOT WATER |
| RTU | ROOF TOP UNIT |
| S | SINK |
| SA | SUPPLY AIR |
| SAT | SUPPLY AIR TEMPERATURE |
| SEER | SEASONAL ENERGY EFFICIENT RATIO |
| SENS | SENSIBLE |
| SD | SMOKE DETECTOR OR DAMPER |
| SF | SUPPLY FAN |
| SFD | SMOKE-FIRE DAMPER |
| SHT | SHEET |
| SP | STATIC PRESSURE |
| SQ | SQUARE |
| SQ | FT SQUARE FOOT |
| SS | STAINLESS STEEL |
| STD | STANDARD |
| TA | TRANSFER AIR |
| TEMP | TEMPERATURE |
| TH | THICK OR THICKNESS |
| TOD | TOP OF DUCT |
| TOP | TOP OF PIPE |
| TP | TRAP PRIMER |
| TU | TERMINAL UNIT |
| TYP | TYPICAL |
| UF | UNDER FLOOR |
| UG | UNDERGROUND |
| UH | UNIT HEATER |
| UR | URINAL |
| US | UNDER SLAB |
| V | VENT OR VOLT |
| VAC | VACUUM |
| VAV | VARIABLE AIR VOLUME |
| VEL | VELOCITY |
| VFD | VARIABLE FREQUENCY DRIVE |
| VRF | VARIABLE REFRIGERANT FLOW |
| VRV | VARIABLE REFRIGERANT VOLUME |
| VTR | VENT THRU ROOF |
| VD | VOLUME DAMPER |
| W | WIDE OR WIDTH |
| WB | WET BULB |
| WC | WATER CLOSET |
| WCO | WALL CLEAN OUT |
| WH | WATER HEATER |
| WHA | WATER HAMMER ARRESTOR |
| WG | WATER GAUGE |
| WPD | WATER PRESSURE DROP |
| WT | WEIGHT |

## PLUMBING SYMBOLS

- ELBOW UP
- ELBOW DOWN
- TEE UP
- TEE DOWN
- CONCENTRIC REDUCER/INCREASER
- ECCENTRIC REDUCER/INCREASER
- UNION
- RISE/DROP IN PIPE
- VENT THRU ROOF
- CAP
- CLEAN-OUT (WALL)
- CLEAN-OUT (FLUSH TO FLOOR OR GRADE)
- FLOOR DRAIN
- CIRCULATING PUMP (POINTS IN DIRECTION OF FLOW)
- VALVE (AS INDICATED OR SPECIFIED)
- CHECK VALVE
- PRESSURE & TEMPERATURE RELIEF VALVE
- PRESSURE REDUCING VALVE (POINTS TOWARDS LOW PRESSURE)
- GAS VALVE
- SOLENOID VALVE
- HOSE BIBB
- CIRCUIT SETTER
- VALVE BOX W/ VALVE (AS SPECIFIED)
- THERMOMETER
- PRESSURE GAGE

## PLUMBING LEGEND

| | |
|---|---|
| — — — | COLD WATER |
| — — — | HOT WATER |
| — — — | HOT WATER RETURN |
| — T — | TEMPERED HOT WATER |
| — — — | VENT |
| — SAN — | SANITARY DRAIN ABOVE FLOOR |
| - - - SAN - - - | SANITARY DRAIN BELOW FLOOR |
| — ST — | STORM DRAIN ABOVE FLOOR |
| - - - ST - - - | STORM DRAIN BELOW FLOOR |
| — CD — | CONDENSATE DRAIN ABOVE FLOOR |
| - - - CD - - - | CONDENSATE DRAIN BELOW FLOOR |
| — RWC — | RAINWATER CONDUCTOR ABOVE FLOOR |
| - - - RWC - - - | RAINWATER CONDUCTOR BELOW FLOOR |
| — F — | FIRE PROTECTION |
| — O2 — | OXYGEN |
| — MV — | MEDICAL VACUUM |
| — MA — | MEDICAL AIR |
| — N20 — | NITROUS OXIDE |
| — N2 — | NITROGEN |
| — CA — | COMPRESSED AIR |

## GENERAL SYMBOLS

- 1 / M5.01 — CROSS-SECTION SYMBOL; SECTION IDENTIFYING NUMBER; SHEET WHERE SECTION IS SHOWN
- 1 / M6.01 — DETAIL SYMBOL; DETAIL IDENTIFYING NUMBER; SHEET WHERE DETAIL IS SHOWN
- POINT OF CONNECTION (POC) SYMBOL
- RCP-1 RCP-1 — EQUIP. TYPE-NUMBER (SEE SCHEDULES); EQUIPMENT IDENTIFIER (OPTIONAL TAG STYLE)
- 1 — REVISION CLOUD AND REVISION NUMBER

## LINEWEIGHT LEGEND

- LIGHT SOLID LINES INDICATES EXISTING ITEMS TO REMAIN
- LIGHT DASHED LINES GENERALLY INDICATE HIDDEN OR UNDERGROUND PIPING OR EQUIPMENT
- DARK LINE INDICATES NEW PIPING & EQUIPMENT
- DARK DASHED LINES INDICATE EXISTING PIPING & EQUIPMENT TO BE REMOVED (FLOOR PLANS & SECTIONS)
- DASHED LINES INDICATE EXISTING PIPING & EQUIPMENT TO BE REMOVED (DEMOLITION DETAILS & FLOW DIAGRAMS)

NOTE:
LINEWEIGHTS ARE GENERAL GUIDES ONLY. REFER TO DRAWING NOTES AND WORK PHASES (DEMO OR NEW) FOR ADDITIONAL DISTINCTIONS.

NOTE: SYMBOLS AND ABBREVIATIONS ON THE DRAWINGS ARE TO BE INTERPRETED IN ACCORDANCE WITH THE LEGENDS ON THIS SHEET. NOT ALL SYMBOLS AND ABBREVIATIONS INDICATED ON THIS SHEET ARE NECESSARILY USED FOR THIS PROJECT.


DESIGN WEST ARCHITECTS, P.A.
• MERIDIAN, IDAHO • PULLMAN, WASHINGTON •
• KENNEWICK, WASHINGTON • ONTARIO, OREGON •
www.designwestpa.com



© COPYRIGHT DESIGN WEST ARCHITECTS P.A. DESIGN CONCEPTS AND DRAWINGS NOT TO BE REUSED WITHOUT WRITTEN PERMISSION OF ARCHITECT


DRAWN BY
MRH

CHECKED BY
ASD

JOB NUMBER
22103

REVISIONS


MSI ENGINEERS
www.msi-engineers.com


AARON S. DONNELLY — STATE OF WASHINGTON — 43373 — REGISTERED PROFESSIONAL ENGINEER

WSU GOLF TEAM
CLUBHOUSE UPGRADE
EXTERIOR & BLDG ADDITION

WASHINGTON STATE UNIVERSTIY
PULLMAN, WA 99163

DATE
1/26/2024

SHEET NAME
NOTES , LEGENDS & ABBREV

SHEET
P0.01


Aaron Donnelly 1/26/2024 9:04:08 AM
P:\2022\22-88 WSU Golf Addition\CAD_ACAD\22-88 P0.01.dwg on Mon, January 29 2024 at 09:04 AM

# PLUMBING FIXTURES

| # | FIXTURE | MFR | MODEL # | MOUNTING | MATERIAL | SIZE | MFR & MODEL# OF FAUCET & VALVE | DRAIN | TRAP | CARRIER | ACCESSORIES | W | V | HW | CW | G | STOPS | NOTES |
|---|---|---|---|---|---|---|---|---|---|---|---|---|---|---|---|---|---|---|
| P1 | ADA WATER CLOSET | AMERICAN STANDARD | MADERA 3043001.060 | FLOOR | VITREOUS CHINA | ELONGATED BOWL | SLOAN 111-5M0-DFB-TP | INTEGRAL | INTEGRAL | - | SEAT BEMIS | 4" | 2" | - | 1" | - | INTEGRAL | 1 2 |
| P2 | ADA LAVATORY | AMERICAN STANDARD | LUCERNE 0355.012 | WALL | VITREOUS CHINA | SINGLE BOWL 20"x18" | " CHICAGO " 116.592.AB.1 | ELKAY LKAB174 | 1 1/4"x17GA C.P. | JAY R. SMITH 0700 | - | | | | | | | 1 2 3 |
| P3 | WATER COOLER / BOTTLE FILLER | ELKAY | LVRCGRNTL8WSK | WALL | STAINLESS STEEL | DUAL HEIGHT | INTEGRAL | INTEGRAL | 1 1/4"x17GA C.P. | JAY R. SMITH 0834 SERIES | - | 1-1/2" | 1-1/2" | - | 1/2" | - | BRASS CRAFT TO SUIT | 1 2 120V/60HZ |

NOTES:
1. MOUNT PER ADA REQUIREMENTS.
2. CAULK FIXTURE AT FLOOR, COUNTERTOP AND/OR WALL SURFACE WITH CAULKING.
3. PROVIDE WITH PLUMBEREX TRAP & SUPPLIES WRAP KIT.
6. PROVIDE WITH OPTIONS KMH AND KH36
7. CONSULT ARCHITECT FOR COLOR.
8. SINK TO BE CUSTOM FABRICATED WITH THE DIMENSIONS INDICATED AND SINK LEDGE ON EITHER SIDE FOR MOUNTING OF FAUCET.

# WALL HYDRANT SCHEDULE

| # | MANUFACTURER | MODEL # | SIZE | NOTES |
|---|---|---|---|---|
| HB-1 | WOODFORD | MODEL 24 | 3/4" | 2 |
| FPWH-1 | JAY R. SMITH | MODEL 5519 | 3/4" | AUTO DRAINING, VACUUM BREAKER, LOOSE - TEE KEY 1 |

NOTES:
1. VERIFY WALL THICKNESS. 2. LOCATED IN MECHANICAL ROOM

# BACKFLOW PREVENTION DEVICES

| # | MANUFACTURER | MODEL # | SIZE | SERVICE | ACCESSORIES | NOTES |
|---|---|---|---|---|---|---|
| BFP-1 | WATTS | #LF009 SERIES | 2" | DOMESTIC WATER | - | 1 |
| BFP-2 | WATTS | #LF009 SERIES | 2" | DOMESTIC WATER | - | 1 |

NOTES:
1. PROVIDE WITH AIR GAP FITTING AND DRAIN UNDIMINISHED IN SIZE TO FLOOR DRAIN.

# ELECTRIC TANKLESS WATER HEATER SCHEDULE

| # | MFR | MODEL | GALLONS | KW INPUT | FLOW (GPM) | OUTLET TEMP (°F) | TEMP RISE (°F) | ELECTRICAL V/PH | ELECTRICAL MCA | ELECTRICAL MOCP | NOTES |
|---|---|---|---|---|---|---|---|---|---|---|---|
| WH-1 | CHRONOMITE | CM-30L/208 | 0 | 6.24 | 0.5 | 110 | 85 | 208/1 | 30 | 40 | 1 |

NOTES:
1. INCLUDE WALL SLEEVE TO CONCEAL HEATER AND PRE-WIRED DISCONNECT SWITCH

# FLOOR DRAIN SCHEDULE

| # | MFR | MODEL | TYPE | BODY STYLE | BODY MATERIAL | STRAINER/GRATE STYLE | STRAINER/GRATE MATERIAL | VARIATION | NOTES |
|---|---|---|---|---|---|---|---|---|---|
| FD-1 | JAY R. SMITH | 2005-A-P-U-Y | FLOOR DRAIN | - | CAST IRON | VANDEL-PROOF ROUND | NICKEL BRONZED | TRAP PRIMER | 1 |
| FS-1 | JAY R. SMITH | 3120Y-12 | FLOOR SINK | - | CAST IRON | - | NICKEL BRONZED | TRAP PRIMER | 1 |

NOTE:
1. PROVIDE WITH SUFFIX -C WHEN LOCATED IN MECHANICAL ROOMS AND SIMILAR SPACES.


DESIGN WEST ARCHITECTS, P.A.
• MERIDIAN, IDAHO • PULLMAN, WASHINGTON •
• KENNEWICK, WASHINGTON • ONTARIO, OREGON •
www.designwestpa.com


© COPYRIGHT DESIGN WEST ARCHITECTS P.A. DESIGN CONCEPTS AND DRAWINGS NOT TO BE REUSED WITHOUT WRITTEN PERMISSION OF ARCHITECT


DRAWN BY
MRH

CHECKED BY
ASD

JOB NUMBER
22103

REVISIONS


MSI ENGINEERS
www.msi-engineers.com


AARON S. DONNELLY
STATE OF WASHINGTON
43373
REGISTERED
PROFESSIONAL ENGINEER

**WSU GOLF TEAM**
**CLUBHOUSE UPGRADE**
**EXTERIOR & BLDG ADDITION**

**WASHINGTON STATE UNIVERSTIY**
**PULLMAN, WA 99163**

DATE
**1/26/2024**

SHEET NAME
PLUMBING SCHEDULES

SHEET
P1.01


Aaron Donnelly 1/29/2024 9:04:12 AM
P:\2022\22-88 WSU Golf Addition\CAD_ACAD\22-88 P1.01.dwg on Mon, January 29 2024 at 09:04 AM

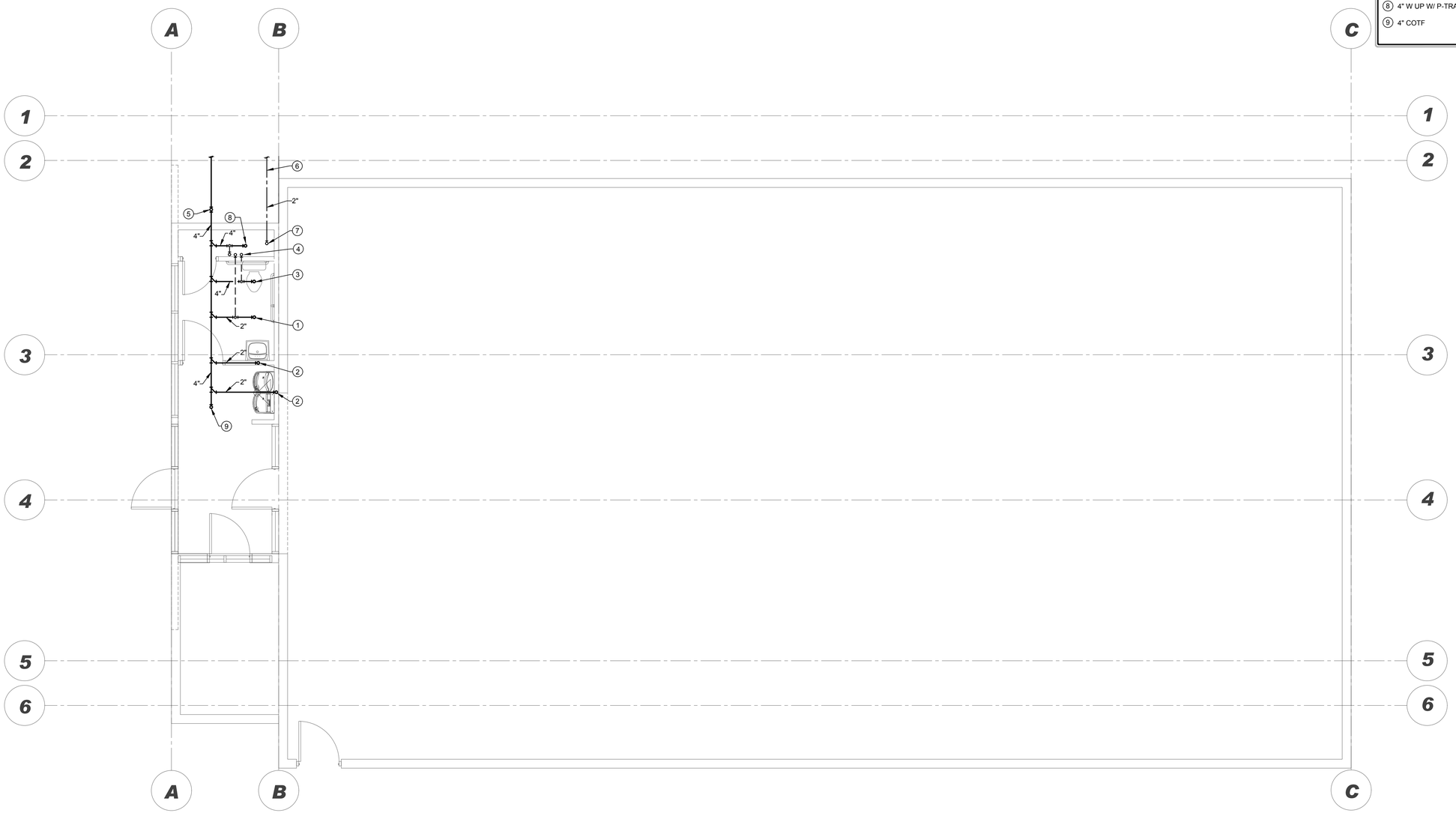


1 FOUNDATION-PLUMBING
Scale: 1/4" = 1' - 0"

## KEY NOTES

1. 2" W UP W/ P-TRAP AND PRIMER.
2. 2" W UP W/ COIW
3. 4" W UP
4. 2" V UP
5. 4" W STUBBED OUT FROM BUILDING W/ COTG, I.E. 2567.50 (2.00 ' BELOW FINISHED FLOOR). COORDINATE WITH CIVIL FOR EXACT POINT OF CONNECTION WHICH MAY BE WITHIN 5-FT OF THE BUILDING.
6. 2" CW STUBBED OUT 5' FROM BUILDING WITH MINIMUM 4-FT OF COVER. COORDINATE WITH CIVIL FOR EXACT POINT OF CONNECTION WHICH MAY BE WITHIN 5-FT OF THE BUILDING.
7. 2" CW UP
8. 4" W UP W/ P-TRAP & PRIMER
9. 4" COTF

DESIGN WEST ARCHITECTS, P.A.
• MERIDIAN, IDAHO • PULLMAN, WASHINGTON •
• KENNEWICK, WASHINGTON • ONTARIO, OREGON •
www.designwestpa.com

© COPYRIGHT DESIGN WEST ARCHITECTS P.A. DESIGN CONCEPTS AND DRAWINGS NOT TO BE REUSED WITHOUT WRITTEN PERMISSION OF ARCHITECT

DRAWN BY
MRH

CHECKED BY
ASD

JOB NUMBER
22103

REVISIONS
1 08/10/2023

MSI ENGINEERS
www.msi-engineers.com

AARON S. DONNELLY
STATE OF WASHINGTON
53373
REGISTERED
PROFESSIONAL ENGINEER

**WSU GOLF TEAM**
**CLUBHOUSE UPGRADE**
**EXTERIOR & BLDG ADDITION**

**WASHINGTON STATE UNIVERSITY**
**PULLMAN, WA 99163**

DATE
**1/26/2024**

SHEET NAME
FOUNDATION PLUMBING

SHEET
P3.30

Aaron Donnelly 1/29/2024 9:04:18 AM
P:\2022\22-88 WSU Golf Addition\CAD_ACAD\22-88 P3.30.dwg on Mon, January 29 2024 at 09:04 AM

1 FLOOR PLAN - PLUMBING

Scale: 1/4" = 1' - 0"

## GENERAL NOTES

## KEY NOTES

1. 2" V DN W/ 2" VTR
2. 2" V DN
3. 2" CW DN
4. 1/2" CW AND 11/4" V DN
5. 11/4" CW DN

DESIGN WEST ARCHITECTS, P.A.
• MERIDIAN, IDAHO • PULLMAN, WASHINGTON •
• KENNEWICK, WASHINGTON • ONTARIO, OREGON •
www.designwestpa.com

© COPYRIGHT DESIGN WEST ARCHITECTS P.A. DESIGN CONCEPTS AND DRAWINGS NOT TO BE REUSED WITHOUT WRITTEN PERMISSION OF ARCHITECT

DRAWN BY
MRH

CHECKED BY
ASD

JOB NUMBER
22103

REVISIONS

MSI ENGINEERS
www.msi-engineers.com

AARON S. DONNELLY
STATE OF WASHINGTON
43373
REGISTERED
PROFESSIONAL ENGINEER

**WSU GOLF TEAM**
**CLUBHOUSE UPGRADE**
**EXTERIOR & BLDG ADDITION**
**WASHINGTON STATE UNIVERSTIY**
**PULLMAN, WA 99163**

DATE
**1/26/2024**

SHEET NAME
FIRST FLOOR PLUMBING

SHEET
P3.31

Aaron Donnelly 1/29/2024 9:04:23 AM
P:\2022\22-88 WSU Golf Addition\CAD_ACAD\22-88 P3.31.dwg on Mon, January 29 2024 at 09:04 AM

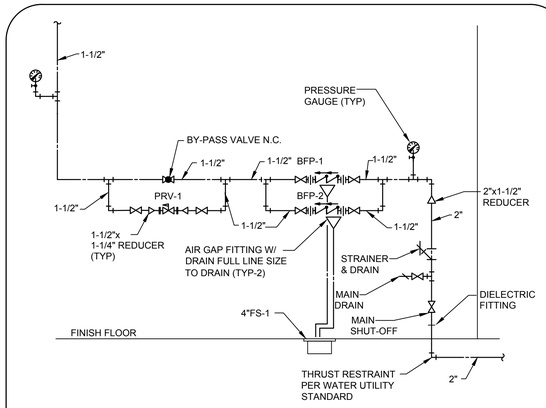


2 WATER HEADER - DETAIL

Scale: NOT TO SCALE

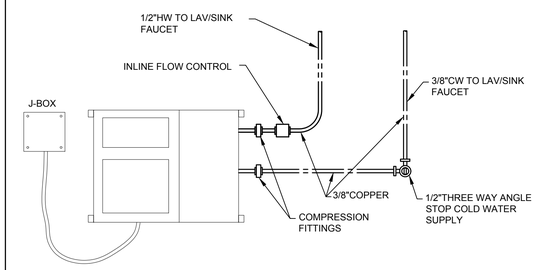


NOTES:
1. MOUNT HEATER UNDERNEATH SINK OR LAVATORY.

1 TANKLESS WATER HEATER DETAIL

Scale: NOT TO SCALE

DESIGN WEST ARCHITECTS, P.A.
• MERIDIAN, IDAHO • PULLMAN, WASHINGTON •
• KENNEWICK, WASHINGTON • ONTARIO, OREGON •
www.designwestpa.com

© COPYRIGHT DESIGN WEST ARCHITECTS P.A. DESIGN CONCEPTS AND DRAWINGS NOT TO BE REUSED WITHOUT WRITTEN PERMISSION OF ARCHITECT

DRAWN BY
MRH

CHECKED BY
ASD

JOB NUMBER
22103

REVISIONS

MSI ENGINEERS
www.msi-engineers.com

AARON S. DONNELLY
STATE OF WASHINGTON
53373
REGISTERED
PROFESSIONAL ENGINEER

WSU GOLF TEAM
CLUBHOUSE UPGRADE
EXTERIOR & BLDG ADDITION

WASHINGTON STATE UNIVERSTIY
PULLMAN, WA 99163

DATE
1/26/2024

SHEET NAME
PLUMBING DETAILS

SHEET
P4.01

Aaron Donnelly 1/26/2024 9:04:27 AM
P:\2022\22-88 WSU Golf Addition\CAD_ACAD\22-88 P4.01.dwg on Mon, January 29 2024 at 09:04 AM

## GENERAL NOTES

(RE: ALL ELECTRICAL SHEETS)

1. ALL ELECTRICAL EQUIPMENT AND SYSTEMS SHALL BE INSTALLED IN ACCORDANCE WITH THE NATIONAL ELECTRICAL CODE, INTERNATIONAL FIRE CODE, AND ALL OTHER STATE AND LOCAL CODES. CONTRACTOR SHALL IMMEDIATELY NOTIFY ENGINEER IN WRITING IF PORTIONS OF THE DESIGN SET OR FIELD CONDITIONS DO NOT MEET REQUIRED CODES.
2. PROVIDE FIRESTOPPING FOR ALL FLOOR AND FIREWALL PENETRATIONS FROM ELECTRICAL DEVICE, RACEWAY, AND CABLE PENETRATIONS. SEE ARCHITECTURAL DRAWINGS FOR FIREWALL LOCATIONS.
3. ALL WIRING DEVICES SHALL BE OF THE SAME MANUFACTURER AND SHALL MATCH THROUGHOUT. COVER PLATES SHALL BE STAINLESS AND DEVICES SHALL BE WHITE.
4. EMERGENCY LIGHTING SYMBOLS ARE SHADED ON THE LIGHTING PLANS. EMERGENCY SOURCE SHALL BE BATTERY BACKED BALLAST WITH MINIMUM OF 1400 LUMEN OUTPUT FOR A 90 MINUTE PERIOD, UNLESS NOTED OTHERWISE. PROVIDE UNSWITCHED CONDUCTORS FOR CHARGING CIRCUIT AS REQUIRED.
5. ALL WIRING DEVICES SHALL BE OF THE SAME MANUFACTURER AND SHALL MATCH THROUGHOUT. COVER PLATES SHALL BE STAINLESS AND DEVICES SHALL BE WHITE.
6. DESIGN OF ELECTRICAL REQUIREMENTS IS BASED ON MECHANICAL EQUIPMENT SPECIFIED. ELECTRICAL CONTRACTOR SHALL COORDINATE WITH MECHANICAL CONTRACTOR IF EQUIPMENT PURCHASED IS DIFFERENT FROM THAT SPECIFIED STILL MEETS DESIGN INTENT, INCLUDING BUT NOT LIMITED TO OVER-CURRENT PROTECTION, LOCAL DISCONNECTING MEANS, AND WIRE SIZING.
7. IT SHALL BE CONTRACTOR'S RESPONSIBILITY TO VERIFY TYPE OF CEILING SYSTEMS AND TO FURNISH APPROVED LIGHTING FIXTURES OF THE TYPE REQUIRED FOR MOUNTING IN SUBJECT CEILING. WHERE FIXTURES ARE RECESSED IN PLASTER OR DRYWALL CEILINGS, THEY SHALL BE COMPLETE WITH NECESSARY MOUNTING HARDWARE AND PLASTER FRAMES.
8. ALL RECESSED LIGHTING FIXTURES, SPEAKERS, RECEPTACLES, SWITCHES, ETC., MOUNTED IN THE FIRE RATED CEILINGS OR WALLS SHALL BE ENCLOSED WITH AN APPROVED ENCLOSURE CARRYING THE SAME FIRE RATING AS THE CEILING OR WALL BY THIS CONTRACTOR.
9. ALL COMMUNICATION CONDUIT SHALL BE 3/4" UNO.
10. COLOR CODE WIRES AS FOLLOWS:

| CONDUCTORS | 120/208V |
|---|---|
| PHASE A | BLACK |
| PHASE B | RED |
| PHASE C | BLUE |
| NEUTRAL | WHITE |
| GROUND | GREEN |

11. ALL SWITCHES TO BE 20 AMP 277 VOLT SPECIFICATION GRADE.
12. ALL WIRE SHALL BE STRANDED TYPE THHN/THWN, MINIMUM SIZE #12 UNLESS OTHERWISE INDICATED.
13. CONTRACTOR SHALL PROVIDE #10 AWG CONDUCTORS FOR ALL CIRCUITS OF 100' OR MORE UNLESS SHOWN LARGER.
14. ALL HOMERUN JUNCTION BOXES SHALL BE A MINIMUM OF 4" SQUARE, 2-1/8" DEEP.
15. FURNISH AND INSTALL A COMPLETE ELECTRICAL SYSTEM AS DEPICTED FROM THE PLANS AND SPECIFICATIONS. COMPLETE AS NOTED OR IMPLIED, NOT LIMITED TO WHAT IS SHOWN.
16. ALL DRAWINGS ARE SCHEMATIC IN NATURE AND ALL APPURTENANCES NOT INDICATED TO MAKE A WORKING SYSTEM MUST BE INCLUDED IN THE CONTRACTOR'S BID.
17. IF THERE APPEARS TO BE ANY ITEMS IN CONFLICT WITH THE DRAWINGS, INCONSISTENCIES WITH DESIGN OR INTENT, OR NEED FOR CLARIFICATION, IT IS THE CONTRACTOR'S RESPONSIBILITY TO CLARIFY THESE ITEMS PRIOR TO BID IN WRITING WITH THE ENGINEER. IF THE CONTRACTOR FAILS TO CLARIFY ANY QUESTIONS OR INCONSISTENCY, HE ACCEPTS RESPONSIBILITY TO CORRECT AT HIS COST ANY SUCH ITEM TO MEET INTENT AS DEFINED BY THE ENGINEER.
18. ALL MOUNTING HEIGHTS OF EQUIPMENT SHALL MEET ADA REQUIREMENTS UNLESS OTHERWISE NOTED.
19. ALL CONDUIT IN WALLS TO BE RUN VERTICAL, MINIMUM SIZE 3/4".
20. COORDINATE ALL DEVICE/FIXTURE LOCATIONS AND SPECIFIC REQUIREMENTS WITH OWNER/ARCHITECT PRIOR TO ROUGH-IN.
21. SEE MECHANICAL PLANS FOR EXACT LOCATION OF ALL MECHANICAL EQUIPMENT.
22. ALL CONDUIT PENETRATING SLAB IN EXPOSED LOCATIONS SHALL BE RIGID STEEL.
23. EACH TRADE SUB-CONTRACTOR IS RESPONSIBLE FOR SUSPENDED SUPPORTS NOT SHOWN ON STRUCTURAL DRAWINGS. ALL SUB-CONTRACTORS SHALL COORDINATE WITH EACH-OTHER FOR ELEVATION PRIORITY PLACEMENT OF GRADED PIPES, LARGE DUCTWORK, EQUIPMENT, CONDUIT, FIRE PROTECTION, AND LIGHTING.
24. OVER-CURRENT PROTECTION FOR THE HVAC EQUIPMENT SHALL BE PER THE MANUFACTURER'S NAMEPLATE, FUSE, OR HACR TYPE BREAKER.

## ABBREVIATIONS

| | |
|---|---|
| (E) | EXISTING |
| (D) | DEMOLISH |
| (R) | RELOCATED |
| (RE) | REPLACED |
| A | AMPERES |
| AC | ABOVE COUNTER |
| AF | AMPERE FRAME |
| AFC | AVAILABLE FAULT CURRENT |
| AFF | ABOVE FINISHED FLOOR |
| AFG | ABOVE FINISHED GRADE |
| AHJ | AUTHORITY HAVING JURISDICTION |
| AT | AMP TRIP |
| AWG | AMERICAN WIRE GAUGE |
| BMS | BUILDING MANAGEMENT SYSTEM |
| C | CONDUIT |
| CB | CIRCUIT BREAKER |
| CKT | CIRCUIT |
| CL | CRITICAL LOAD |
| CM | CEILING MOUNTED |
| CO | CONDUIT ONLY, PROVIDE PULL-LINE |
| D | MECHANICAL DUCT-MOUNTED DEVICE |
| DC | DIRECT CURRENT |
| DET | DETAIL |
| E | EMERGENCY/CRITICAL CARE |
| EF | EXHAUST FAN |
| EL | EMERGENCY LIGHT |
| EWC | ELECTRIC WATER COOLER |
| EWH | ELECTRIC WATER HEATER |
| F | FUSE |
| FACP | FIRE ALARM CONTROL PANEL |
| FVNR | FULL VOLTAGE NON-REVERSING |
| G/GND | GROUND |
| GFI | GROUND FAULT INTERRUPTION |
| GFCI | GROUND FAULT CIRCUIT INTERRUPTION |
| GFP | GROUND FAULT PROTECTION |
| H | HEAT |
| HH | HANDHOLE |
| HID | HIGH INTENSITY DISCHARGE |
| HOA | HAND OFF AUTO |
| HP | HORSE POWER |
| HVAC | HEATING, VENTILATING, & AIR CONDITIONING |
| I | IONIZATION |
| IC | INTERRUPTING CAPACITY |
| ID | IN-DUCT/INTER-DUCT |
| IG | ISOLATED GROUND |
| J/JB | JUNCTION BOX |
| KW | KILOWATT |
| KWH | KILOWATT HOUR |
| M | MAGNETIC CONTACTOR COIL |
| MAU | MAKEUP AIR UNIT |
| MB | MAIN BREAKER |
| MCC | MOTOR CONTROL CENTER |
| MH | MANHOLE |
| MLO | MAIN LUGS ONLY |
| MS | MOTOR STARTER |
| MW | MICROWAVE |
| N | NEUTRAL |
| NC | NORMALLY CLOSED |
| NCL | NON CRITICAL LOAD |
| NEC | NATIONAL ELECTRICAL CODE |
| NIC | NOT IN CONTRACT |
| NO | NORMALLY OPEN |
| NTS | NOT TO SCALE |
| OFCI | OWNER FURNISHED CONTRACTOR INSTALLED |
| OL | OVERLOAD |
| OS | OCCUPANCY SENSOR |
| P | PHOTO |
| PC | PHOTOCELL |
| PVC | POLYVINYL CHLORIDE |
| RCP | REFLECTIVE CEILING PLAN |
| RCPT | RECEPTACLE |
| REF | REFRIGERATOR |
| RIB | RELAY IN A BOX |
| SPST | SINGLE POLE SINGLE THROW |
| TC | TIME CLOCK |
| TDR | TIME DELAY RELAY |
| TJB | TERMINAL JUNCTION BOX |
| TP | TWISTED PAIR |
| TT | TWISTED TRIAD |
| TSP | TWISTED SHIELDED PAIR |
| TST | TWISTED SHIELDED TRIAD |
| TTB | TELEPHONE TERMINAL BOARD |
| TVSS | TRANSIENT VOLTAGE SURGE SUPPRESSER |
| TYP | TYPICAL |
| UH | UNIT HEATER |
| UNO | UNLESS NOTED OTHERWISE |
| V | VOLT |
| VA | VOLT AMPERE |
| WG | PROVIDE PROTECTIVE WIRE GUARD |
| WIU | WHILE IN USE |
| WP | WEATHER PROOF/NEMA 3R |
| XFMR | TRANSFORMER |

## CIRCUITING SYMBOLS

- CONDUIT STUBBED, CAPPED, AND MARKED WITH PULL CORD.
- CONDUIT UP.
- CONDUIT DOWN.
- CIRCUIT CONCEALED IN CEILING OR WALL.
- CIRCUIT CONCEALED IN FLOOR OR UNDERGROUND.
- HOMERUN. PANEL AND CIRCUIT AS INDICATED.

RACEWAY SIZE — 3/4"C
CONDUCTOR QUANTITY — 2#12; 1#12G
CONDUCTOR SIZE — PANEL & CIRCUIT: P-1
GROUNDING CONDUCTOR SIZE

CIRCUIT SHALL CONSIST OF 3/4"-2#12, 1#12G UNLESS NOTED OTHERWISE.

CONTRACTOR SHALL ROUTE CIRCUIT HOMERUN FROM DEVICE NEAREST THE PANEL.

## MISC. SYMBOLS

- J — JUNCTION BOX.
- J — JUNCTION BOX, WALL MOUNTED.
- T — THERMOSTAT. +56" AFF UNO. PROVIDE 3/4"C TO UNIT CONTROLLED INDICATED.
- SURFACE MOUNTED PANELBOARD/ENCLOSURE.SEE SCHEDULE FOR TYPE.
- FLUSH MOUNTED PANELBOARD/ENCLOSURE. SEE SCHEDULE FOR TYPE.
- TAG — MECHANICAL EQUIPMENT SYMBOL (RE: MECHANICAL DRAWINGS FOR EXACT LOCATION OF UNITS).
- XX## — INDICATES FIXTURE TYPE. REFER TO LUMINAIRE SCHEDULE.
- C — ADA DOOR CHIME/STROBE
- SINGLE BUTTON. WALL MOUNTED PUSHBUTTON. MOUNT AT SWITCH HEIGHT UNO.
- THREE BUTTON, WALL MOUNTED PUSHBUTTON MOUNT AT SWITCH HEIGHT UNO.
- TV — TELEVISION OUTLET. PROVIDE NEMA 5-20R OUTLET AND 3/4"C STUB TO ACCESSIBLE SPACE.
- TELEPHONE TERMINAL BOARD 'TTB'.
- X / XXXX — DETAIL / SHEET
- # — KEYNOTE

## SWITCHES

Sxx SWITCH. TYPE AS INDICATED. +46"AFF, UNO.

| | |
|---|---|
| 2 | DOUBLE POLE |
| 3 | 3-WAY |
| 4 | 4-WAY |
| D | DIMMER. LUTRON DVSTV |
| F | CEILING FAN CONTROLLER |
| HP | HORSE POWER RATED |
| K | KEYED |
| LV | LOW VOLTAGE |
| M | MOMENTARY CONTACT |
| MM | MANUAL MOTOR STARTER |
| OS | OCCUPANCY SENSOR |
| P | PILOT LIGHT |
| T | 15 MINUTE TIMER |
| TO | THERMAL OVERLOAD |
| V | VOLUME CONTROL |
| VS | VACANCY SENSOR |
| a | SUPERSCRIPT INDICATES LIGHTS TO BE SWITCHED TOGETHER |

- OS 1 — INFRARED OCCUPANCY SENSOR SWITCH - CEILING MOUNTED.
- OS 2 — DUAL TECHNOLOGY OCCUPANCY SENSOR SWITCH - CEILING MOUNTED.
- OS 3 — LOW TEMPERATURE/HIGH HUMIDITY INFRARED OCCUPANCY SENSOR SWITCH - CEILING MOUNTED.
- OS 4 — INFRARED 2-POLE OCCUPANCY SENSOR SWITCH - CEILING MOUNTED, OR PROVIDE WITH DUAL MULTI-VOLT POWERPACKS FOR CONTROL OF TWO CIRCUITS.
- OS 5 — DUAL TECHNOLOGY OCCUPANCY CONTROLLED DIMMING VACANCY SENSOR. SENSORSWITCH CMR-PDT-10-D-OR SIMILAR - CEILING MOUNTED.
- P — PHOTOCELL. WALL MOUNTED.
- P — PHOTOCELL. CEILING MOUNTED.
- OS LV — LOW VOLTAGE OCCUPANCY SENSOR.

## POWER SYMBOLS

- SIMPLEX 20A RECESSED RECEPTACLE. +18" AFF UNO
- SIMPLEX 20A RECESSED RECEPTACLE. MOUNT ABOVE COUNTER UNO.
- DUPLEX NEMA 5-20A OUTLET. +18" AFF UNO.
- DUPLEX NEMA 5-20A OUTLET. MOUNT ABOVE COUNTER UNO.
- DUPLEX NEMA 5-20A OUTLET WITH GROUND FAULT INTERRUPTION PROTECTION. +18" AFF UNO.
- DUPLEX NEMA 5-20A OUTLET WITH GROUND FAULT INTERRUPTION PROTECTION. MOUNTED ABOVE COUNTER UNO
- SPLIT-SWITCHED NEMA 5-20A DUPLEX OUTLET. +18" AFF UNO. RE: E2.0-7.
- SPLIT-SWITCHED NEMA 5-20A DUPLEX OUTLET. MOUNTED ABOVE COUNTER UNO. RE: E2.10-7.
- DUPLEX NEMA 5-20A OUTLET WITH INTEGRAL USB CHARGING. +18" AFF UNO.
- DUPLEX NEMA 5-20A OUTLET WITH INTEGRAL USB CHARGING. MOUNTED ABOVE COUNTER UNO.
- DUPLEX NEMA 5-20A ISOLATED GROUND OUTLET. +18" AFF UNO.
- DUPLEX NEMA 5-20A ISOLATED GROUND OUTLET. MOUNTED ABOVE COUNTER UNO.
- FOURPLEX NEMA 5-20A OUTLET. +18" AFF UNO.
- FOURPLEX NEMA 5-20A OUTLET. MOUNTED ABOVE COUNTER UNO.
- FOURPLEX NEMA 5-20A OUTLET WITH GROUND FAULT INTERRUPTION PROTECTION. +18" AFF UNO.
- FOURPLEX NEMA 5-20A OUTLET WITH GROUND FAULT INTERRUPTION PROTECTION. MOUNTED ABOVE COUNTER UNO.
- SWITCHED FOURPLEX NEMA 5-20A OUTLET. +18" AFF UNO.
- SWITCHED FOURPLEX NEMA 5-20A OUTLET. MOUNTED ABOVE COUNTER UNO.
- FOURPLEX NEMA 5-20A OUTLET WITH INTEGRAL USB CHARGING. +18" AFF UNO.
- FOURPLEX NEMA 5-20A OUTLET WITH INTEGRAL USB CHARGING. MOUNTED ABOVE COUNTER UNO.
- FOURPLEX NEMA 5-20A ISOLATED GROUND OUTLET .+18" AFF UNO.
- FOURPLEX NEMA 5-20A ISOLATED GROUND OUTLET. MOUNTED ABOVE COUNTER UNO.
- SPECIAL PURPOSE OUTLET. VERIFY SIZE AND TYPE WITH EQUIPMENT SUPPLIER.
- CONNECTION POINT TO EQUIPMENT SPECIFIED, FURNISHED, AND INSTALLED UNDER OTHER SECTIONS. ELECTRICAL CONTRACTOR TO SUPPLY RACEWAY AND CONDUCTORS AND MAKE FINAL CONNECTION TO EQUIPMENT UNDER THIS SECTION, UNO.
- DUPLEX NEMA 5-20A OUTLET, FLUSH FLOOR MOUNTED WITH BRASS COVER PLATE UNO.
- FOURPLEX NEMA 5-20A OUTLET, FLUSH FLOOR MOUNTED WITH BRASS COVER PLATE UNO.
- SPECIAL PURPOSE OUTLET. VERIFY SIZE AND TYPE WITH EQUIPMENT SUPPLIER. FLUSH FLOOR MOUNTED WITH BRASS COVER PLATE.
- DUPLEX NEMA 5-20A OUTLET, CEILING MOUNTED UNO.
- FOURPLEX NEMA 5-20A OUTLET, CEILING MOUTNED UNO.
- MOTOR STARTER/CONTACTOR.
- COMBINATION STARTER AND DISCONNECT.
- NON-FUSED DISCONNECT SWITCH. SIZE AS INDICATED, NEMA 1 UNO, 3 POLE UNO.
- F — FUSED DISCONNECT SWITCH. SIZE AS INDICATED, NEMA 1 UNO, 3 POLE UNO.

## GENERAL SYMBOLS

- NEW
- EXISTING
- DEMO
- EXISTING ITEM TO BE REMOVED AND RELOCATED (R)

## LIGHTING

(SEE LUMINAIRE SCHEDULE FOR EXACT REQUIREMENTS)

- SINGLE FACE EXIT SIGN. CEILING MOUNTED.
- DOUBLE FACE EXIT SIGN. CEILING MOUNTED.
- SINGLE FACE EXIT SIGN. WALL MOUNTED.
- DOUBLE FACE EXIT SIGN. WALL MOUNTED.
- SINGLE FACE COMBO EXIT SIGN/ EMERGENCY LUMINAIRE. WALL MOUNTED.
- ARROW INDICATES DIRECTION TO BE SHOWN ON SIGN.
- 1'x4' LIGHT FIXTURE.
- 1'x4' EMERGENCY LIGHT FIXTURE.
- 2'x2' RECESSED LED LIGHT FIXTURE.
- 2'x2' RECESSED EMERGENCY LED LIGHT FIXTURE.
- 2'x4' RECESSED LIGHT FIXTURE.
- 2'x4' RECESSED EMERGENCY LIGHT FIXTURE.
- STRIP LIGHT FIXTURE.
- STRIP EGRESS LIGHT FIXTURE.
- WALL MOUNTED FIXTURE.
- WALL MOUNTED EMERGENCY FIXTURE.
- WALL SCONCE FIXTURE.
- WALL PACK FIXTURE.
- UNDERCABINET MOUNTED FIXTURE.
- TRACKLIGHT.
- PENDANT LIGHT FIXTURE.
- EMERGENCY PENDANT LIGHT FIXTURE.
- ROUND DECORATIVE LIGHT FIXTURE. SURFACE MOUNT
- RECESSED LIGHT FIXTURE.
- RECESSED EMERGENCY LIGHT FIXTURE .
- RECESSED WALL WASH LIGHT FIXTURE.
- POLE LIGHT 1 HEAD WITH POLE.
- POLE LIGHT 2 HEAD WITH POLE.
- BOLLARD LIGHT.
- DECORATIVE POST-TOP LIGHT.
- EMERGENCY EGRESS LIGHT. WALL MOUNTED.
- EMERGENCY EGRESS LIGHT. CEILING MOUNTED.
- PC — PHOTO CELL

## ONE LINE

- BRANCH PANEL XXXXX — BRANCH PANEL.
- CIRCUIT BREAKER. SIZE AND TYPE AS SPECIFIED.
- CIRCUIT BREAKER. FRAME SIZE (AF) AND TRIP PLUG/RATING (AT), 3 POLE, UNO.
- M — METER AND BASE.
- NEUTRAL — NEUTRAL BUS
- GROUND — GROUND BUS
- GROUND.
- AVAILABLE FAULT CURRENT.
- UTILITY TRANSFORMER.
- CURRENT TRANSFORMER.

## MOUNTING HEIGHT DETAIL

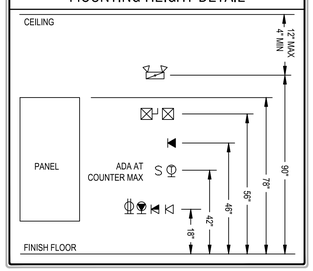



DESIGN WEST ARCHITECTS, P.A.
• MERIDIAN, IDAHO • PULLMAN, WASHINGTON •
• KENNEWICK, WASHINGTON • ONTARIO, OREGON •
www.designwestpa.com



© COPYRIGHT DESIGN WEST ARCHITECTS P.A. DESIGN CONCEPTS AND DRAWINGS NOT TO BE REUSED WITHOUT WRITTEN PERMISSION OF ARCHITECT


DRAWN BY
TR

CHECKED BY
BJ

JOB NUMBER
22103

REVISIONS

MSI ENGINEERS
www.msi-engineers.com

BENJAMIN M. JENNINGS
STATE OF WASHINGTON
57485
REGISTERED
PROFESSIONAL ENGINEER

**WSU GOLF TEAM**
**CLUBHOUSE UPGRADE**
**EXTERIOR & BLDG ADDITION**
**WASHINGTON STATE UNIVERSITY**
**PULLMAN, WA 99163**

DATE
**1/26/2024**

SHEET NAME
LEGENDS & ABBREV.

SHEET
E1.00


Ben Jennings 1/26/2024 11:40:13 AM

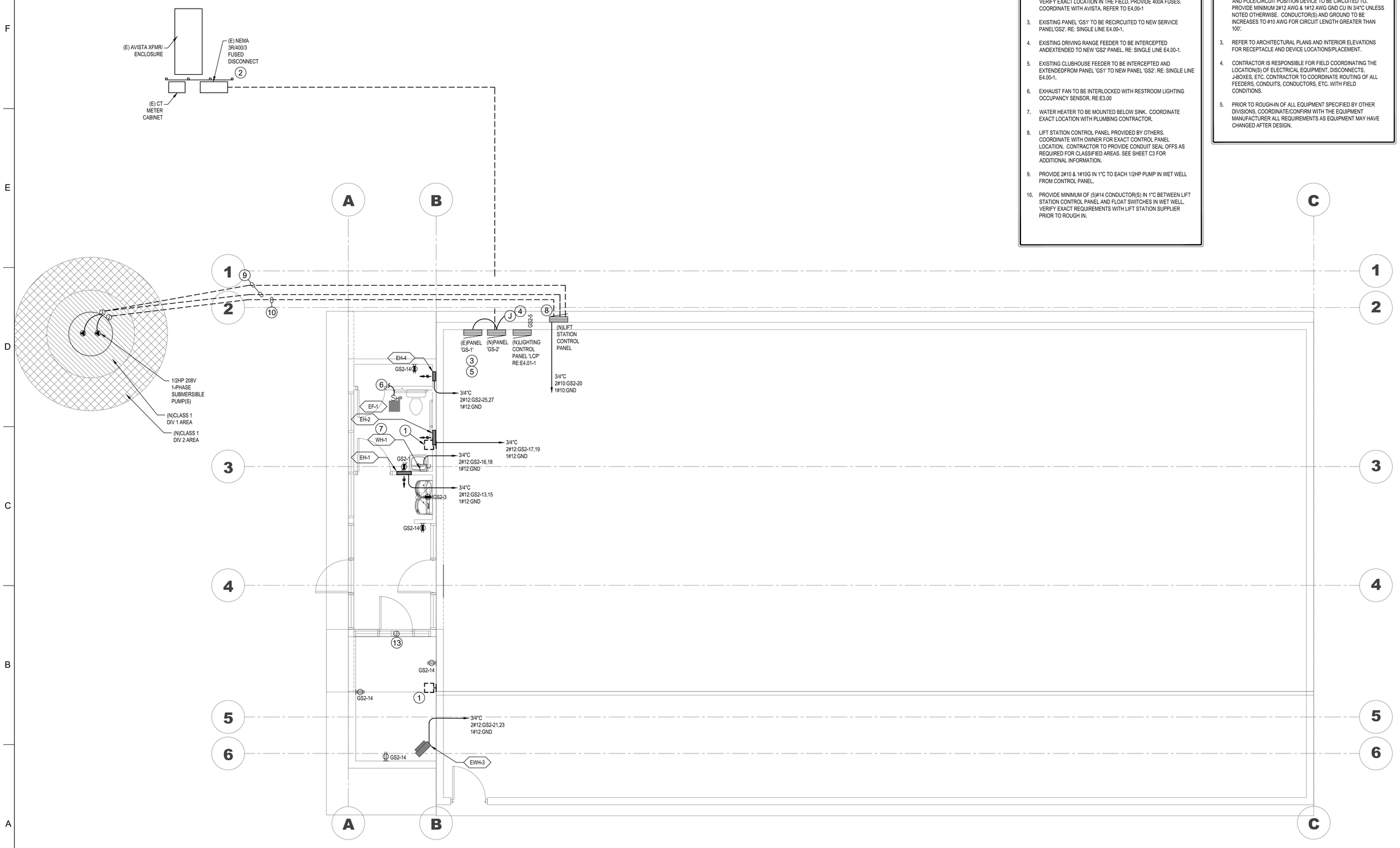


1 POWER PLAN
Scale: 1/4" = 1' - 0"

## KEY NOTES

1. EXISTING EXTERIOR FIXTURE TO BE DEMOLISHED.
2. EXISTING DISCONNECT APPROXIMATELY 50' FROM BUILDING. VERIFY EXACT LOCATION IN THE FIELD. PROVIDE 400A FUSES. COORDINATE WITH AVISTA. REFER TO E4.00-1
3. EXISTING PANEL 'GS1' TO BE RECIRCUITED TO NEW SERVICE PANEL'GS2'. RE: SINGLE LINE E4.00-1.
4. EXISTING DRIVING RANGE FEEDER TO BE INTERCEPTED ANDEXTENDED TO NEW 'GS2' PANEL. RE: SINGLE LINE E4.00-1.
5. EXISTING CLUBHOUSE FEEDER TO BE INTERCEPTED AND EXTENDEDFROM PANEL 'GS1' TO NEW PANEL 'GS2'. RE: SINGLE LINE E4.00-1.
6. EXHAUST FAN TO BE INTERLOCKED WITH RESTROOM LIGHTING OCCUPANCY SENSOR. RE:E3.00
7. WATER HEATER TO BE MOUNTED BELOW SINK. COORDINATE EXACT LOCATION WITH PLUMBING CONTRACTOR.
8. LIFT STATION CONTROL PANEL PROVIDED BY OTHERS. COORDINATE WITH OWNER FOR EXACT CONTROL PANEL LOCATION. CONTRACTOR TO PROVIDE CONDUIT SEAL OFFS AS REQUIRED FOR CLASSIFIED AREAS. SEE SHEET C3 FOR ADDITIONAL INFORMATION.
9. PROVIDE 2#10 & 1#10G IN 1"C TO EACH 1/2HP PUMP IN WET WELL FROM CONTROL PANEL.
10. PROVIDE MINIMUM OF (5)#14 CONDUCTOR(S) IN 1"C BETWEEN LIFT STATION CONTROL PANEL AND FLOAT SWITCHES IN WET WELL. VERIFY EXACT REQUIREMENTS WITH LIFT STATION SUPPLIER PRIOR TO ROUGH IN.

## GENERAL NOTES

1. ALL RECEPTACLES TO BE TAMPER RESISTANT PER NEC 406.12.
2. NUMBER ADJACENT TO DEVICE/RECEPTACLE INDICATES PANEL AND POLE/CIRCUIT POSITION DEVICE TO BE CIRCUITED TO. PROVIDE MINIMUM 2#12 AWG & 1#12 AWG GND CU IN 3/4"C UNLESS NOTED OTHERWISE. CONDUCTOR(S) AND GROUND TO BE INCREASES TO #10 AWG FOR CIRCUIT LENGTH GREATER THAN 100'.
3. REFER TO ARCHITECTURAL PLANS AND INTERIOR ELEVATIONS FOR RECEPTACLE AND DEVICE LOCATIONS/PLACEMENT.
4. CONTRACTOR IS RESPONSIBLE FOR FIELD COORDINATING THE LOCATION(S) OF ELECTRICAL EQUIPMENT, DISCONNECTS, J-BOXES, ETC. CONTRACTOR TO COORDINATE ROUTING OF ALL FEEDERS, CONDUITS, CONDUCTORS, ETC. WITH FIELD CONDITIONS.
5. PRIOR TO ROUGH-IN OF ALL EQUIPMENT SPECIFIED BY OTHER DIVISIONS, COORDINATE/CONFIRM WITH THE EQUIPMENT MANUFACTURER ALL REQUIREMENTS AS EQUIPMENT MAY HAVE CHANGED AFTER DESIGN.

DESIGN WEST ARCHITECTS, P.A.
• MERIDIAN, IDAHO • PULLMAN, WASHINGTON •
• KENNEWICK, WASHINGTON • ONTARIO, OREGON •
www.designwestpa.com

© COPYRIGHT DESIGN WEST ARCHITECTS P.A. DESIGN CONCEPTS AND DRAWINGS NOT TO BE REUSED WITHOUT WRITTEN PERMISSION OF ARCHITECT

DRAWN BY
TR

CHECKED BY
BJ

JOB NUMBER
22103

REVISIONS

MSI ENGINEERS
www.msi-engineers.com

BENJAMIN M. JENNINGS
STATE OF WASHINGTON
37465
REGISTERED
PROFESSIONAL ENGINEER

WSU GOLF TEAM
CLUBHOUSE UPGRADE
EXTERIOR & BLDG ADDITION
WASHINGTON STATE UNIVERSITY
PULLMAN, WA 99163

DATE
1/26/2024

SHEET NAME
FIRST FLOOR - POWER

SHEET
E2.00

Ben Jennings 1/29/2024 11:40:42 AM

## GENERAL NOTES

1. ALL EXIT SIGNS TO BE CONNECT TO LOCAL LIGHTING CIRCUIT AHEAD OF ANY AND ALL SWITCHING WHETHER INDICATED OR NOT.
2. REFER TO ARCHITECTURAL REFLECTED CEILING PLANS FOR CEILING TYPES AND HEIGHTS.
3. PROVIDE UNSWITCHED 'CHARGING' CIRCUIT TO ALL BATTERY BACKED FIXTURE(S).
4. PROVIDE ADDITIONAL SWITCH LEGS, TRAVILERS, GROUNDS, NEUTRALS, ETC. TO FACILITATE CONTROL OF LIGHTING FIXTURES TO MEET THE INTENT OF THE DESIGN. LOWER CASE 'x' LETTER NEXT TO FIXTURE/SWITCH INDICATES SWITCHING INTENT.
5. LIGHTING CONTROLS AND CONTROLS COMMISSIONING REQUIREMENTS ARE TO BE IN ACCORDANCE WITH WASHINGTON STATE ENERGY CODE 'WSEC'.
6. PROVIDE CLASS 2 WIRING BETWEEN ALL LIGHT FIXTURE(S) AND CONTROL DEVICES TO FACILITATE NECESSARY LIGHTING CONTROL.
7. ALL FIXTURES WITHIN A GIVEN ROOM/AREA ARE OF THE SAME TYPE INDICATED UNLESS NOTED OTHERWISE.
8. NUMBER ADJACENT TO FIXTURE/EQUIPMENT INDICATES PANEL AND CIRCUIT NUMBER DEVICE IS TO BE CIRCUITED TO. CONDUCTOR(S) TO BE MINIMUM 2#12 & 1#12 GND AWG CU IN 3/4" CONDUIT UNLESS NOTED OTHERWISE. ALL CIRCUIT(S) OVER 100' TO BE UPSIZED TO #10 AWG.
9. FIELD VERIFY EXISTING CIRCUITING AND MAKE ADJUSTMENTS AS NECESSSARY TO NEW CIRCUITING BASED ON FIELD CONDITIONS.
10. SEE FIXTURE SCHEDULE FOR FIXTURE TYPES.
11. COORDINATE FINAL LOCATION OF ALL FIXTURE(S) TO AVOID CONFLICTS WITH OTHER TRADES/EQUIPMENT.

## KEY NOTES (#)

1. EXHAUST FAN TO BE INTERLOCKED WITH RESTROOM LIGHTING OCCUPANCY SENSOR. RE:E2.00
2. PROVIDE LIGHTING CONTROL PANEL OVERRIDE SWITCH.
3. VERIFY EXACT MOUNTING HEIGHT WITH BACKLIT MURAL/LOGO. ROUTE CIRCUIT THROUGH LIGHTING CONTROL PANEL. REFER TO ARCHITECTURAL EXTERIOR ELEVATIONS.
4. REFER TO E4.01-5 FOR VESTIBULE CONTROL DIAGRAM AND INFORMATION.
5. PROVIDE EXTERIOR MOUNTED PHOTOCELL FACING NORTH WITH LOW VOLTAGE CABLING TO LIGHTING CONTROL PANEL. RE:E4.01-1
6. FIXTURE TO HAVE BATTERY BACKED DRIVER FOR EGRESS.

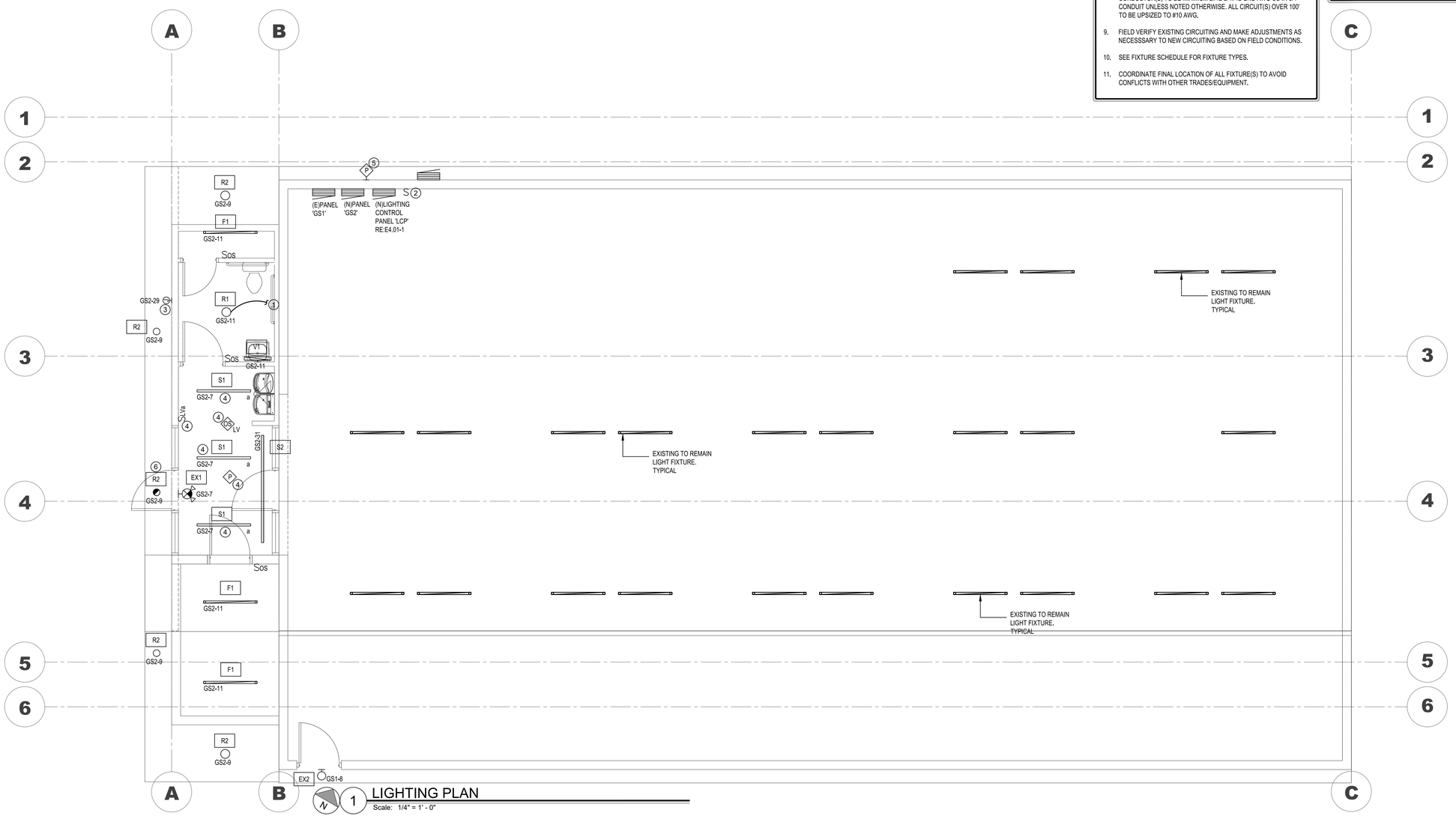


1 LIGHTING PLAN
Scale: 1/4" = 1' - 0"


DESIGN WEST ARCHITECTS, P.A.
• MERIDIAN, IDAHO • PULLMAN, WASHINGTON •
• KENNEWICK, WASHINGTON • ONTARIO, OREGON •
www.designwestpa.com



© COPYRIGHT DESIGN WEST ARCHITECTS P.A. DESIGN CONCEPTS AND DRAWINGS NOT TO BE REUSED WITHOUT WRITTEN PERMISSION OF ARCHITECT


DRAWN BY
TR

CHECKED BY
BJ

JOB NUMBER
22103

REVISIONS

MSI ENGINEERS
www.msi-engineers.com

BENJAMIN M. JENNINGS
STATE OF WASHINGTON
51485
REGISTERED PROFESSIONAL ENGINEER

**WSU GOLF TEAM**
**CLUBHOUSE UPGRADE**
**EXTERIOR & BLDG ADDITION**
**WASHINGTON STATE UNIVERSTIY**
**PULLMAN, WA 99163**

DATE
**1/26/2024**

SHEET NAME
FIRST FLOOR - LIGHTING

SHEET
E3.00

Ben.Jennings 1/29/2024 11:40:30 AM

## MSI ENGINEERS

### PANEL: (E) GS1

**VOLTAGE:** 208/120V **PHASE:** 1 **WIRE:** 3 **MINIMUM AIC RATING:** SEE SINGLE LINE
**AMPERE RATING:** 200A **ENCLOSURE RATING:** NEMA 1

| CKT NO | LOAD (VA) | LOAD SERVED | NOTE | LOAD TYPE | AMPS/ POLES | | PHASE A | PHASE B | AMPS/ POLES | | LOAD TYPE | NOTE | LOAD SERVED | LOAD (VA) | CKT NO |
|---|---|---|---|---|---|---|---|---|---|---|---|---|---|---|---|
| 1 | 1500 | FUEL PUMP | | | 20 | 1 | 2220 | | 20 | 2 | | | RECEPTACLES, NORTH WALL | 720 | 2 |
| 3 | 900 | RECEPTACLES | | | 20 | 1 | | 1620 | ** | * | | | RECEPTACLES, NORTH, EAST WALLS | 720 | 4 |
| 5 | 1200 | IRRIGATION POWER | | | 30 | 1 | 1740 | | 20 | 1 | | | RECEPTACLES, SOUTH | 540 | 6 |
| 7 | | SPARE | | | 100 | 2 | | 750 | 20 | 1 | | | LIGHTS | 750 | 8 |
| 9 | | SPARE | | | *** | * | 0 | | 20 | 1 | | | SPARE | | 10 |
| 11 | 5000 | UNIT HEATER | | | 70 | 2 | | 5000 | 20 | 1 | | | SPARE | | 12 |
| 13 | 5000 | UNIT HEATER | | | ** | * | 5000 | | 50 | 2 | | | SPARE | | 14 |
| 15 | | SPACE | | | | | | 0 | ** | * | | | SPARE | | 16 |
| 17 | | SPACE | | | | | 0 | | 100 | 2 | | | SPARE | | 18 |
| 19 | | SPACE | | | | | | 0 | *** | * | | | SPARE | | 20 |
| 21 | | SPACE | | | | | 0 | | | | | | SPACE | | 22 |
| 23 | | SPACE | | | | | | 0 | | | | | SPACE | | 24 |
| 25 | | SPACE | | | | | 0 | | | | | | SPACE | | 26 |
| 27 | | SPACE | | | | | | 0 | | | | | SPACE | | 28 |
| 29 | | SPACE | | | | | 0 | | | | | | SPACE | | 30 |
| 31 | | SPACE | | | | | | 0 | | | | | SPACE | | 32 |
| 33 | | SPACE | | | | | 0 | | | | | | SPACE | | 34 |
| 35 | | SPACE | | | | | | 0 | | | | | SPACE | | 36 |
| 37 | | SPACE | | | | | 0 | | | | | | SPACE | | 38 |
| 39 | | SPACE | | | | | | 0 | | | | | SPACE | | 40 |
| 41 | | SPACE | | | | | 0 | | | | | | SPACE | | 42 |

| CONNECTED LOADS: | Amps | VA |
|---|---|---|
| PHASE A: | 75 | 8960 |
| PHASE B: | 61 | 7370 |
| | | |
| TOTAL: | | 16330 |

| LOAD TYPES: |
|---|
| L = LIGHTING |
| R = RECEPTACLES |
| MC = MISC |
| MT = MOTOR |
| K = KITCHEN |
| LARGEST MOTOR = |
| # OF KITCHEN = |

## MSI ENGINEERS

### (N)PANEL: GS2

**VOLTAGE:** 208/120V **PHASE:** 3 **WIRE:** 4 **MINIMUM AIC RATING:** SEE SINGLE LINE **SERVICE ENTRANCE RATED**
**AMPERE RATING:** 400A **ENCLOSURE RATING:** NEMA 1 **PROVIDE 400A MAIN CIRCUIT BREAKER**

| CKT NO | LOAD (VA) | LOAD SERVED | NOTE | LOAD TYPE | AMPS/ POLES | | PHASE A | PHASE B | PHASE C | AMPS/ POLES | | LOAD TYPE | NOTE | LOAD SERVED | LOAD (VA) | CKT NO |
|---|---|---|---|---|---|---|---|---|---|---|---|---|---|---|---|---|
| 1 | 180 | REC - BATHROOM | | MC | 20 | 1 | 9780 | | | 100 | 2 | MC | 2 | EXISTING DRIVING RANGE BUILDING PANEL | 9600 | 2 |
| 3 | 500 | REC - WATER FOUNTAIN | | MC | 20 | 1 | | 10100 | | *** | * | MC | 2 | EXISTING DRIVING RANGE BUILDING PANEL | 9600 | 4 |
| 5 | 180 | LIGHTING CONTROL PANEL | | MC | 20 | 1 | | | 9140 | 100 | 2 | MC | 2 | EXISTING PANEL 'GS1' | 8960 | 6 |
| 7 | 108 | LIGHTS - VESTIBULE | | L | 20 | 1 | 7478 | | | *** | * | MC | 2 | EXISTING PANEL 'GS1' | 7370 | 8 |
| 9 | 150 | LIGHTS - EXTERIOR | 1 | L | 20 | 1 | | 9750 | | 100 | 2 | R | 2 | EXISTING CLUBHOUSE PANEL | 9600 | 10 |
| 11 | 45 | LIGHTS - BATHROOM/STORAGE | | L | 20 | 1 | | | 9645 | *** | * | R | 2 | EXISTING CLUBHOUSE PANEL | 9600 | 12 |
| 13 | 1500 | WALL HEATER 'EH-1' | | MC | 20 | 2 | 2400 | | | 20 | 1 | R | | REC - VESTIBULE/STORAGE | 900 | 14 |
| 15 | 1500 | WALL HEATER 'EH-1' | | MC | ** | * | | 2700 | | 20 | 2 | MC | | WATER HEATER 'WH-1' | 1200 | 16 |
| 17 | 750 | WALL HEATER 'EH-2' | | MC | 20 | 2 | | | 1950 | ** | * | MC | | WATER HEATER 'WH-1' | 1200 | 18 |
| 19 | 750 | WALL HEATER 'EH-2' | | MC | ** | * | 2430 | | | 20 | 1 | MT | | LIFT STATION CONTROL PANEL | 1680 | 20 |
| 21 | 1000 | WALL HEATER 'EH-3' | | MC | 20 | 2 | | 1000 | | 20 | 1 | | | SPARE | | 22 |
| 23 | 1000 | WALL HEATER 'EH-3' | | MC | ** | * | | | 1000 | 20 | 1 | | | SPARE | | 24 |
| 25 | 750 | WALL HEATER 'EH-4' | | MC | 20 | 2 | 750 | | | 20 | 1 | | | SPARE | | 26 |
| 27 | 750 | WALL HEATER 'EH-4' | | MC | ** | * | | 750 | | 20 | 1 | | | SPARE | | 28 |
| 29 | 1200 | LIGHTS - EXTERIAL MURAL/LOGO | 1 | L | 20 | 1 | | | 1200 | 20 | 1 | | | SPARE | | 30 |
| 31 | 48 | LIGHTS - LOGO | 1 | L | 20 | 1 | 48 | | | 20 | 1 | | | SPARE | | 32 |
| 33 | | SPACE | | | | | | 0 | | | | | | SPACE | | 34 |
| 35 | | SPACE | | | | | | | 0 | | | | | SPACE | | 36 |
| 37 | | SPACE | | | | | 0 | | | | | | | SPACE | | 38 |
| 39 | | SPACE | | | | | | 0 | | | | | | SPACE | | 40 |
| 41 | | SPACE | | | | | | | 0 | | | | | SPACE | | 42 |

| CONNECTED LOADS: | Amps | VA |
|---|---|---|
| PHASE A: | 191 | 22886 |
| PHASE B: | 203 | 24300 |
| PHASE C: | 191 | 22935 |
| TOTAL: | | 70121 |

| LOAD TYPES: |
|---|
| L = LIGHTING |
| R = RECEPTACLES |
| MC = MISC |
| MT = MOTOR |
| K = KITCHEN |
| LARGEST MOTOR = |
| # OF KITCHEN = |

**NOTES:**

**1 - ROUTE CIRCUIT THROUGH LIGHTING CONTROL PANEL 'LCP'. RE:E4.01-1**
**2 - EQUIPMENT/PANEL TO BE RECIRCUITED FROM EXISTING 'GS1' PANEL TO NEW PANEL 'GS2'**

| LOADING BY TYPE | DEMAND FACTOR | DEMAND | NEC CODE |
|---|---|---|---|
| L | 125% | 1939 VA | 210-19 |
| R | 10kVA @ 100%, REM @ 50% | 15050 VA | 220-44 |
| MC | 100% | 46790 VA | 220-60 |
| MT | 100% + LARGEST x 25% | 1680 VA | 220-50 |
| K | | 0 VA | 220-56 |
| | TOTAL | 65459 | 182 |

## 2 PANEL SCHEDULES

Scale: NOT TO SCALE

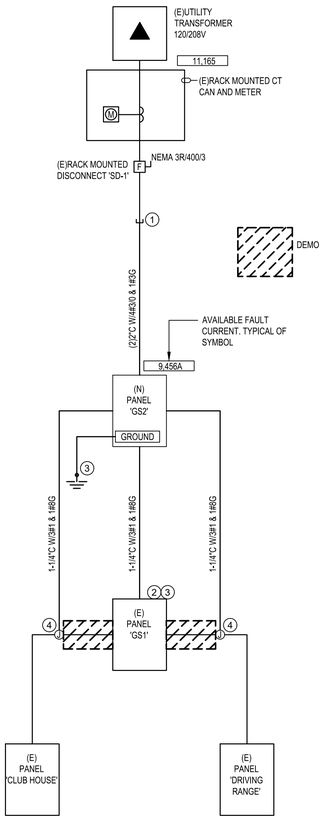


## 1 SINGLE LINE DIAGRAM 'GOLF'

Scale: NOT TO SCALE

## KEY NOTES

1. CONTRACTOR TO INTERCEPT EXISTING (2)2" CONDUIT STUBS FROM EXISTING RACK MOUNTED SERVICE DISCONNECT AND EXTEND TO NEW BUILDING SERVICE DISCONNECT INDICATED. CONTRACTOR TO PROVIDE NEW CONDUCTOR(S) AS INDICATED BETWEEN EXISTING 400A SERVICE DISCONNECT AND NEW BUILDING SERVICE PANEL.
2. EXISTING PANEL 'GS' SERVICE TO BE DISCONNECT AND REMOVED. EXISTING PANEL 'GS' TO BE REFED FROM NEW PANEL 'GS2' AS INDICATED.
3. EXISTING SERVICE GROUND TO BE DISCONNECTED FROM EXISTING PANEL 'GS' AND RECONNECTED/EXTENDED TO NEW PANEL 'GS2'.
4. EXISTING FEEDER TO BE DISCONNECTED FROM EXISTING PANEL 'GS1' AND REFED FROM NEW PANEL 'GS2'.

## GENERAL NOTES

1. FAULT CURRENT INFORMATION WAS UNAVAILABLE AT TIME OF DESIGN. FAULT CURRENT CALCULATIONS ARE BASED ON AN INFINITE BUS WITH A 112.5KVA, 120/208V, 3-PHASE, TRANSFORMER WITH AN IMPEDANCE OF 2.8%. CONTRACTOR TO VERIFY AVAILABLE FAULT CURRENT FROM UTILITY AND NOTIFY ENGINEER OF RECORD PRIOR TO PURCHASE OF ANY ELECTRICAL PANELS/SWITCHBOARDS.

| LUMINAIRE SCHEDULE | | | | | | | | | |
|---|---|---|---|---|---|---|---|---|---|
| TYPE | DESCRIPTION | MANUFACTURER | CATALOG NUMBER | LOAD(VA) | VOLTAGE | LAMP | EMERGENCY | MOUNTING | NOTES |
| R1 | 6" RECESSED CAN/WAFFER | JUNO | WF6-REG-SWW5-90CRI-MW-M6 | 13 | 120 | LED | | RECESSED | |
| R2 | | COOPER LIGHTING | LDA6ACP-2000-90-35-D010TR-LAR35FL-6LFC1 | 30 | 120 | LED | EMBOD7ST | RECESSED | |
| V1 | VANITY FIXTURE | LITHONIA | FMVCSLS 24IN MVOLT 30K35K40K 90CRI BN M6 | 27 | 120/277 | LED | | WALL SCONCE | MOUNT ABOVE MIRROR |
| F1 | STRIP FIXTURE | LITHONIA | CLX-L48-5000LM-SEF-RDL-MVOLT-35K-80CRI | 32 | 120/277 | LED | | SURFACE | |
| S1 | 4' LED SUSPENDED STRIP FIXTURE | STARTEK | SLIMDI-4'-500-500-WD-BW-35K-80-PB-XX-U-1C | 36 | MVOLT | LED | | SUSPENDED | MOUNT AT 10' ABOVE FINISHED FLOOR |
| S2 | 8' LED SUSPENDED STRIP FIXTURE | STARTEK | SLIMD-8'-500-WW-35K-80-PB-XX-U-1C | 48 | MVOLT | LED | | SUSPENDED | VERIFY MOUNTING HEIGHT WITH LOGO. |
| EX1 | EXIT WITH BUG EYES | LITHONIA | LHQM-LED-G | 1 | 120/277 | LED | | ABOVE DOOR MULLION | |
| EX2 | EGRESS EXTERIOR | LITHONIA | AFF-OEL-XXX-UVOLT-LTP-SDRT-WT-CW | 1 | 120/277 | LED | | ABOVE DOOR MULLION | VERIFY COLOR/FINISH WITH ARCHITECT. |

## 3 LUMINAIRE SCHEDULE

Scale: NOT TO SCALE


DESIGN WEST ARCHITECTS, P.A.
• MERIDIAN, IDAHO • PULLMAN, WASHINGTON •
• KENNEWICK, WASHINGTON • ONTARIO, OREGON •
www.designwestpa.com



© COPYRIGHT DESIGN WEST ARCHITECTS P.A. DESIGN CONCEPTS AND DRAWINGS NOT TO BE REUSED WITHOUT WRITTEN PERMISSION OF ARCHITECT


DRAWN BY
MRH

CHECKED BY
ASD

JOB NUMBER
22103

REVISIONS
1 08/10/2023

MSI ENGINEERS
www.msi-engineers.com

BENJAMIN M. JENKINS
STATE OF WASHINGTON
57465
REGISTERED
PROFESSIONAL ENGINEER

**WSU GOLF TEAM**
**CLUBHOUSE UPGRADE**
**EXTERIOR & BLDG ADDITION**
**WASHINGTON STATE UNIVERSITY**
**PULLMAN, WA 99163**

DATE
**1/26/2024**

SHEET NAME
SINGLE LINE AND SCHEDULES

SHEET
E4.00


Ben Jennings 1/25/2024 11:40:36 AM

# LIGHTING COMPLIANCE SUMMARY

2018 WSEC Compliance Forms for Commercial Buildings including Group R2, R3 & R4 over 3 stories and all R1

Administered by: ©2023 NEEA, All rights reserved

| | | | |
|---|---|---|---|
| Project & Applicant Information | Project Title | WSU Golf Addition - 2018 WSEC | For Building Department Use: Date: Dec 21, 2023 |
| | Project Address | Washington State University Pullman, WA 99163 | |
| | Applicant Name | Timothy Russell | |
| | Applicant Phone | 509-381-3185 | |
| | Applicant Email | tim@msi-engineers.com | |

For questions about this report, contact WSEC Commercial Technical Support at 360-539-5300 or via email at com.techsupport@waenergycodes.com

| | | | | | | | |
|---|---|---|---|---|---|---|---|
| General Occupancy | All Commercial | | General Building Use Type | | Education, College/University | Building Cond. Floor Area | 3,892 |
| General Project Types | Building Addition | New Building or Addition Lighting Scope | Interior Lighting Exterior Lighting | Alteration Lighting Scope | | Project Cond. Floor Area | 3,892 |
| | | | | | | Floors Above Grade | 1 |
| | | | | | | Compliance Method | Compliance Method 1 - General |
| Lighting Project Description | WSU Golf Team, Clubhouse upgrade, exterior & bldg addition | | | | | | |

| Lighting Compliance Scope and Method | Project Type | Interior / Exterior (Interior includes both interior & parking) | Luminaire Replacement Scope | Compliance Method | LPA Calculation Adjustment | Compliance Verification |
|---|---|---|---|---|---|---|
| | Building Addition | Interior Lighting | | Building area | No Calculation Adjustments selected | COMPLIES |
| | Building Addition | Exterior Lighting | | | Not applicable to exterior | COMPLIES |

| Project Title | WSU Golf Addition - 2018 WSEC | Date | Dec 21, 2023 |
|---|---|---|---|
| Lighting Power Calculation | BUILDING ADDITION - INTERIOR LIGHTING | Compliance Verification | COMPLIES |
| Compliance Method | Building area | LPA Calculation Adjustment | none |

Interior Lighting Power Allowance - Building Area

| Building Areas | Gross Interior Area (SF) | LPA (Watts/SF) | Total Watts Allowed (SF x LPA x 1) | Total Proposed Watts By Building Area | Compliance Status by Building Area |
|---|---|---|---|---|---|
| School/university | 3,837 | 0.70 | 2,686 | 867 | COMPLIES |

Proposed Lighting Power Density

| Fixture Type/Application | Fixture ID | Building Area | New or Existing-to-Remain | Quantity of Fixtures, CLDs or Luminaires (#F) | Watts per Fixture, CLD or Luminaire (WpF) | Total Linear Feet (LF) | Watts per Linear Foot (WpLF) | Total Watts Proposed (#F x WpF) or (LF x WpLF) |
|---|---|---|---|---|---|---|---|---|
| Individual Fixtures | | | | | | | | |
| Horizontal surface-mount | F1 | School/university | New | 3 | 32 | | | 96 |
| Recessed cove lighting | S1 | School/university | New | 3 | 36 | | | 108 |
| Recessed cove lighting | S2 | School/university | New | 1 | 48 | | | 48 |
| Recessed downlight | R1 | School/university | New | 1 | 13 | | | 13 |
| Suspended | Exist | School/university | New | 23 | 25 | | | 575 |
| Task lighting | V1 | School/university | New | 1 | 27 | | | 27 |

| Project Title | WSU Golf Addition - 2018 WSEC | Date | Dec 21, 2023 |
|---|---|---|---|
| Proposed Fixtures Details | BUILDING ADDITION - INTERIOR LIGHTING | | |

| Fixture Type/Application | Fixture ID | Location in Documents | Lamp Type | Building Area | New or Existing-to-Remain |
|---|---|---|---|---|---|
| Individual Fixtures | | | | | |





| | | | | | |
|---|---|---|---|---|---|
| Horizontal surface-mount | F1 | E3.00 | LED | School/university | New |
| | Fixture Description: Surface mount, strip fixture | | | Are these fixtures located within a daylight zone?: No | |
| | Do these fixtures require specific application lighting controls?: None required | | | | |
| Recessed cove lighting | S1 | E3.00 | LED | School/university | New |
| | Fixture Description: LED Strip - cove - A1-ZUCO-STW-CL-35K-12-10V-DRY-UNV-XX | | | Are these fixtures located within a daylight zone?: No | |
| | Do these fixtures require specific application lighting controls?: None required | | | | |
| Recessed cove lighting | S2 | E3.00 | LED | School/university | New |
| | Fixture Description: LED Strip - mullion - A1-ZUCO-STW-CL-35K-12-10V-DRY-UNV-XX | | | Are these fixtures located within a daylight zone?: No | |
| | Do these fixtures require specific application lighting controls?: None required | | | | |
| Recessed downlight | R1 | E3.00 | LED | School/university | New |
| | Fixture Description: 6" can downlight - WF6-REG-SWW5-90CRI-MW-M6 | | | Are these fixtures located within a daylight zone?: No | |
| | Do these fixtures require specific application lighting controls?: None required | | | | |
| Suspended | Exist | E3.00 | LED | School/university | New |
| | Fixture Description: Existing LED strip | | | Are these fixtures located within a daylight zone?: No | |
| | Do these fixtures require specific application lighting controls?: None required | | | | |
| Task lighting | V1 | E3.00 | LED | School/university | New |
| | Fixture Description: 24" VANITY FIXTURE - FMVCSLS 24IN MVOLT 30K35K40K 90CRI BN M6 | | | Are these fixtures located within a daylight zone?: No | |
| | Do these fixtures require specific application lighting controls?: None required | | | | |

| Project Title | WSU Golf Addition - 2018 WSEC | Date | Dec 21, 2023 |
|---|---|---|---|
| Lighting Power Calculation | BUILDING ADDITION - EXTERIOR LIGHTING | Compliance Verification | COMPLIES |
| Exterior Lighting Zone | ZONE 2 | Base Site Allowance | 400 |

Exterior Tradable Lighting Power Allowance

| Exterior Surface | Surface Sub-Type | Surface Area (SF) | LPA (Watts/SF) | Linear Feet (LF) | LPA (Watts/LF) | Total Watts Allowed (LPA x SF) or (LPA x LF) | Total Proposed Watts | Compliance Status |
|---|---|---|---|---|---|---|---|---|
| Building entrances and exits | Entry canopies | 160 | 0.25 | | | 40 | | |
| | | | | | Base Site Allowance | 400 | | |
| | | | | | Totals | 440 | 150 | COMPLIES |

Proposed Tradable Lighting Power Density

| Fixture Type | Fixture ID | Exterior Surface Type | Quantity of Fixtures (#F) | Watts or Wattage Limit per Fixture (WpF) | Total Linear Feet (LF) | Watts per Linear Foot (WpLF) | Total Watts Proposed (#F x WpF) or (LF x WpLF) |
|---|---|---|---|---|---|---|---|
| Individual Fixtures | | | | | | | |
| Canopy | R2 | Building entrances and exits - Entry canopies | 5 | 30 | | | 150 |
| | | | | | | Proposed Total LPD | 150 |



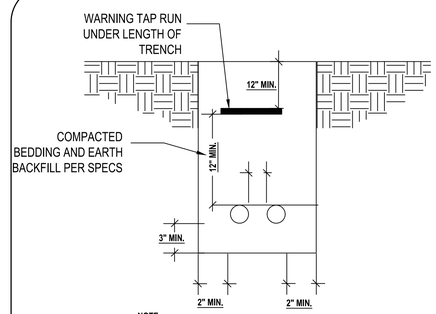


**NOTE**
UTILIZE DUCT BANK SPACERS WHERE 3 OR MORE CONDUITS ARE INSTALLED IN TRENCH.USE#12 GALVANIZED IRON TIE DOWN WIRE AROUND THE DUCT BANK AT A MAXIMUM OF 4'-0" APART ALONG THE ENTIRE LENGTH.
D =3" FOR 2" AND LARGER CONDUIT
D = 2" MIN. FOR 1-1/2" AND SMALLER CONDUIT

## 2 UNDERGROUND DUCT BANK DETAIL
Scale: NOT TO SCALE

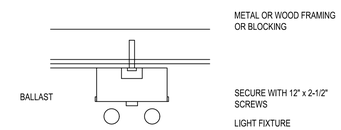


## 3 SURFACE MOUNT FIXTURE HARD CEILING
Scale: NOT TO SCALE

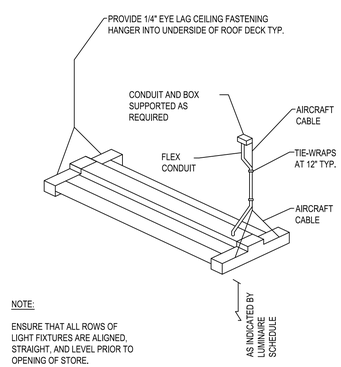


NOTE:
ENSURE THAT ALL ROWS OF LIGHT FIXTURES ARE ALIGNED, STRAIGHT, AND LEVEL PRIOR TO OPENING OF STORE.

## 4 SUSPENDED LIGHT MOUNTING
Scale: NOT TO SCALE

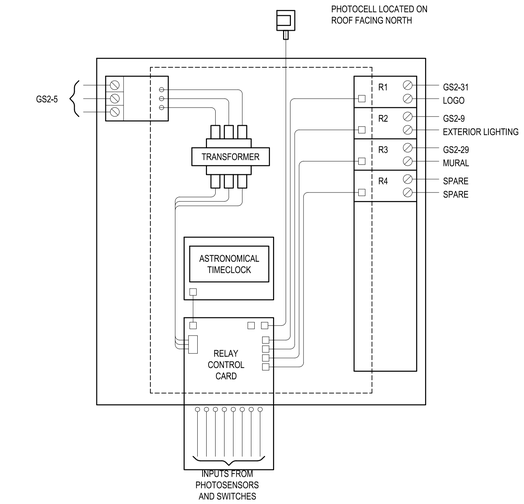


NOTES

1. DETAIL SHOWN FOR DESIGN INTENT. COORDINATE SPECIFIC REQUIREMENTS WITH MANUFACTURERS LITERATURE, CONTROL PANEL REQUIREMENTS AND SPECIFICATIONS. PROVIDE A MINIMUM OF (4) 1-POLE RELAYS.
2. RELAY SHALL BE SUITABLE FOR LED FIXTURES.

CONTROL PANEL REQUIREMENTS

PANEL SHALL BE CAPABLE OF LIGHT SWEEP ON/OFF CONTROLS FOR BUILDING LIGHTING SHUT DOWN.

LOCAL OVERRIDE SWITCHING ON PLAN.

TIMER TO SWEEP LIGHTS OFF AT CLOSING, WITH REPEAT OFF SWEEPS.

EACH RELAY SHALL BE CAPABLE OF INDIVIDUAL CONTROL.

COORDINATE EXACT DESIGNED OPERATION REQUIREMENTS WITH END USER PRIOR TO PROJECT COMPLETION.

## 1 LIGHTING CONTROL PANEL DETAIL
Scale: NOT TO SCALE

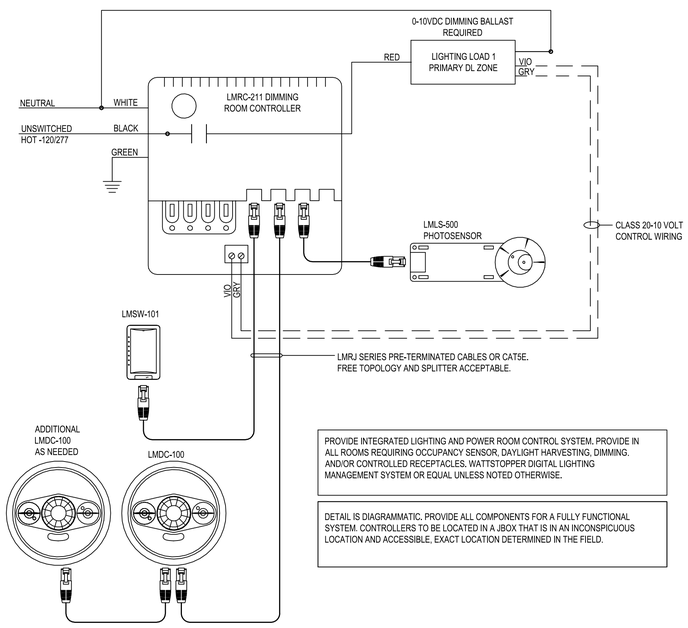


PROVIDE INTEGRATED LIGHTING AND POWER ROOM CONTROL SYSTEM. PROVIDE IN ALL ROOMS REQUIRING OCCUPANCY SENSOR, DAYLIGHT HARVESTING, DIMMING. AND/OR CONTROLLED RECEPTACLES. WATTSTOPPER DIGITAL LIGHTING MANAGEMENT SYSTEM OR EQUAL UNLESS NOTED OTHERWISE.

DETAIL IS DIAGRAMMATIC. PROVIDE ALL COMPONENTS FOR A FULLY FUNCTIONAL SYSTEM. CONTROLLERS TO BE LOCATED IN A JBOX THAT IS IN AN INCONSPICUOUS LOCATION AND ACCESSIBLE, EXACT LOCATION DETERMINED IN THE FIELD.

## 5 'VESTIBULE' CONTROL DIAGRAM
Scale: NOT TO SCALE

DESIGN WEST ARCHITECTS, P.A.
• MERIDIAN, IDAHO • PULLMAN, WASHINGTON •
• KENNEWICK, WASHINGTON • ONTARIO, OREGON •
www.designwestpa.com

© COPYRIGHT DESIGN WEST ARCHITECTS P.A. DESIGN CONCEPTS AND DRAWINGS NOT TO BE REUSED WITHOUT WRITTEN PERMISSION OF ARCHITECT

DRAWN BY
MRH

CHECKED BY
ASD

JOB NUMBER
22103

REVISIONS

MSI ENGINEERS
www.msi-engineers.com

BENJAMIN M. JENNINGS
STATE OF WASHINGTON
57461
REGISTERED PROFESSIONAL ENGINEER

WSU GOLF TEAM
CLUBHOUSE UPGRADE
EXTERIOR & BLDG ADDITION
WASHINGTON STATE UNIVERSITY
PULLMAN, WA 99163

DATE
1/26/2024

SHEET NAME
DETAILS & LIGHTING COMPLIANCE

SHEET
E4.01

Ben Jennings 1/29/2024 11:40:23 AM