WEGNER HALL (0045)

RM 310, 320B AND 320BA HVAC UPGRADES

PROJECT 1654-2022

Washington State University

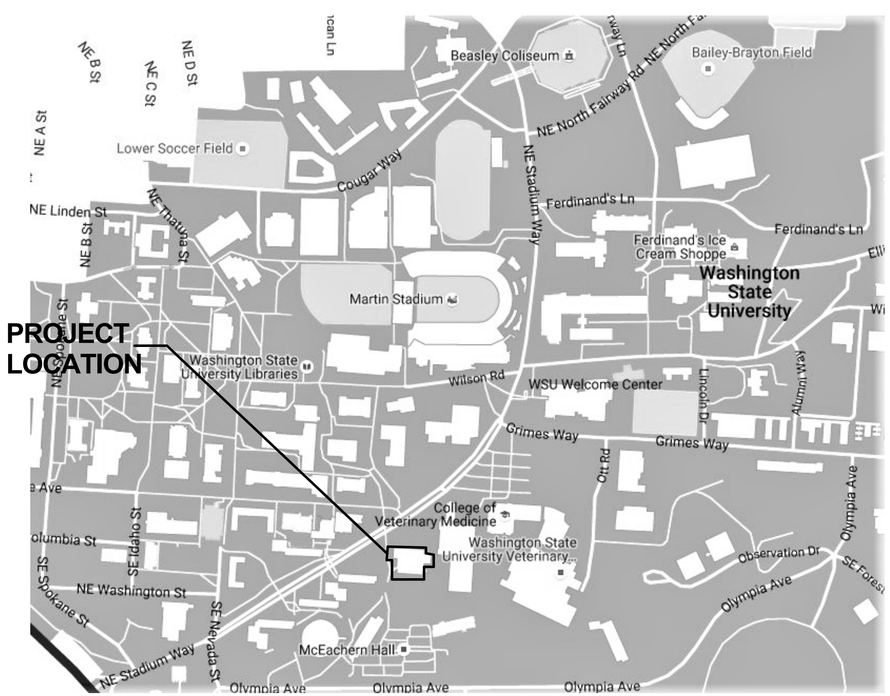

PROJECT LOCATION MAP

SCALE: N.T.S.

GENERAL NOTES

1. THE CONTRACTOR SHALL FIELD VERIFY ALL EXISTING CONDITIONS PRIOR TO EXECUTING ANY WORK AND SHALL NOTIFY THE DEPARTMENT OF FACILITIES OPERATIONS IN WRITING OF ANYTHING DIFFERING FROM THAT SHOWN ON THE DRAWINGS. FAILURE TO DO SO WILL CONSTITUTE THE CONTRACTOR'S ACCEPTANCE OF THE WORK AS SHOWN.
2. ALL WORK SHALL COMPLY WITH ALL CODES, ORDINANCES AND REQUIREMENTS.
3. DO NOT SCALE DRAWINGS; WRITTEN DIMENSIONS SHALL PREVAIL.
4. THE CONTRACTOR SHALL OBTAIN ALL PERMITS REQUIRED PRIOR TO ANY PHASE OF CONSTRUCTION. FEES AND ANY RELATED COSTS ARE THE RESPONSIBILITY OF THE CONTRACTOR.
5. EXISTING BUILDINGS, UTILITIES, ETC. OR PORTIONS THEREOF, WHICH ARE DAMAGED BY CONSTRUCTION OPERATIONS SHALL BE REPAIRED OR REPLACED TO THEIR ORIGINAL CONDITION, UNLESS OTHERWISE NOTED TO BE REMODELED PER THE CONTRACT DOCUMENTS.
6. EXACT LOCATIONS OF EXISTING UTILITIES ARE TO BE VERIFIED BY THE CONTRACTOR.
7. THE DUTIES OF THE OWNER/WASHINGTON STATE UNIVERSITY, ITS ENGINEER, AND ITS DESIGNATED CONSULTING ENGINEER DOES NOT INCLUDE DESIGN AND CONSTRUCTION REVIEW SERVICES RELATING TO THE CONTRACTORS SAFETY PRECAUTIONS OR TO THE MEANS, METHODS, TECHNIQUES, SEQUENCES OR PROCEDURES REQUIRED FOR THE CONTRACTOR TO PERFORM HIS WORK.
8. THE PLANS ARE DIAGRAMMATIC AND DO NOT ATTEMPT TO SHOW ALL DETAILS OF CONSTRUCTION.
9. THE CONTRACTOR SHALL THOROUGHLY EXAMINE THE PROJECT SITE TO BECOME FAMILIAR WITH THE EXISTING CONDITIONS, CONNECTION POINTS, ACCESS LIMITATIONS, AND OVERALL CONDITION OF THE EXISTING SYSTEMS PRIOR TO COMMENCEMENT OF WORK.
10. CONTRACTOR SHALL COORDINATE AND COMMUNICATE THEIR WORK WITH THE OCCUPANTS AND WSU PROJECT MANAGER WITH REGARD TO SCHEDULE
11. COORDINATE SHUT DOWN OF UTILITIES WITH THE OWNER A MINIMUM OF 14 DAYS IN ADVANCE.
12. ALL MATERIALS REMOVED DURING DEMOLITION SHALL BE SALVAGED TO SURPLUS OR PROPERLY DISPOSED UNLESS OTHERWISE NOTED.
13. COORDINATE WITH SPECIFICATIONS. IN CASE OF CONFLICT BETWEEN SPECIFICATIONS AND DRAWINGS THE MORE STRINGENT SHALL APPLY.

INDEX of DRAWINGS

SHEET #	SHEET TITLE
T0.00	PROJECT COVER SHEET
M0.01	MECHANICAL LEGENDS, ABBREVIATIONS, AND GENERAL NOTES
M0.02	EQUIPMENT SCHEDULES
M2.02	PENTHOUSE MECHANICAL DEMO
M3.01	THIRD FLOOR MECHANICAL
M3.02	PENTHOUSE MECHANICAL
M4.01	MECHANICAL DETAILS
M4.02	CONTROL DIAGRAMS
E0.01	ELECTRICAL LEGENDS, ABBREVIATIONS, AND GENERAL NOTES
E3.01	THIRD FLOOR POWER & DETAILS
E-603	SEQUENCE OF OPERATION AND 'CP-1' SCHEMATIC

PROJECT CONTACTS

WSU FACILITIES SERVICES
ROY SENTER
509-335-9352
SENTER@WSU.EDU

WSU EH&S
SHAWN RINGO
509-335-5251
SRINGO@WSU.EDU

MSI ENGINEERS
AARON DONNELLY, PE MECHANICAL
509-624-1050
AARON@MSI-ENGINEERS.COM

BEN JENNINGS, PE ELECTRICAL
509-624-1050
BEN@MSI-ENGINEERS.COM

BUILDING INFORMATION

ADDRESS
1505 NE STADIUM WAY, PULLMAN, WA

CODE SUMMARY
CONSTRUCTION TYPE: II-B
OCCUPANCY GROUP: B - EDUCATION
FULLY SPRINKLED: YES

APPLICABLE BUILDING CODES:
2018 INTERNATIONAL BUILDING CODE
2018 NATIONAL ELECTRICAL CODE
2018 WASHINGTON STATE ENERGY CODE
2018 INTERNATIONAL EXISTING BUILDING CODE
2018 INTERNATIONAL MECHANICAL CODE
2018 UNIFORM PLUMBING CODE

DESIGN FIRM:

MSI ENGINEERS
www.msi-engineers.com

CONSULTANTS:

PROVISIONAL STAMP:

AARON S. DONNELLY
STATE OF WASHINGTON
43373
REGISTERED PROFESSIONAL ENGINEER

WASHINGTON STATE UNIVERSITY

Facilities Services
2425 E. Grimes Way
Pullman, Wa. 99164-1150
PH 509-335-5571
FAX 509-335-9304

WEGNER HALL

RM 310, 320B AND 320BA HVAC UPGRADE

0045

MARK	DATE	DESCRIPTION
	10/25/22	REVISED BID SET

CAD DWG FILE:
DESIGNED BY: ASD
DRAWN BY: RD
CHECKED BY: ASD
PROJECT No. 1654-2022
FILE No: TBD

COPYRIGHT: WASHINGTON STATE UNIVERSITY

SHEET TITLE

PROJECT COVER SHEET

T0.00

SHEET 1 OF 11 SHEETS

HVAC CLIMATE DESIGN CRITERIA

PROJECT LOCATION	PULLMAN, WA	
ASHRAE WEATHER DATA	PULLMAN, WA	SEE NOTE 1
DESIGN ALTITUDE	2,365 FT	
CLIMATE ZONE	5B	SEE NOTE 2
OUTDOOR DESIGN TEMPS:	HEATING: 4°F DB COOLING: 92°F DB/65°F WB	SEE NOTE 3
INDOOR DESIGN TEMPS:	HEATING: 72°F DB COOLING: 75°F DB/67°F WB	SEE NOTE 4

NOTES:
1. CLIMATE DATA PROVIDED BY ASHRAE.
2. PER 2018 WSEC, TABLE C301.1.
3. OUTDOOR DESIGN TEMPS PER 2018 WSEC, C302.2 APPDX C.
4. INDOOR DESIGN TEMPS PER 2018 WSEC, C302.1.

GENERAL NOTES

1. THE MECHANICAL SYSTEMS SHALL CONSIST OF ALL WORK SHOWN ON THE MECHANICAL DRAWINGS, DIAGRAMS AND AS DESCRIBED IN ASSOCIATED TECHNICAL SPECIFICATIONS.
2. REFER TO SPECIFICATIONS AND ALL OTHER DIVISION DOCUMENTS FOR ADDITIONAL REQUIREMENTS. COORDINATE WORK SHOWN ON THE DRAWINGS WITH THE SPECIFICATIONS. IN CASE OF DISCREPANCY BETWEEN SPECIFICATIONS AND DRAWINGS REFER TO THE GENERAL CONDITIONS AND NOTIFY THE A/E FOR DIRECTION.
3. MECHANICAL CONTRACTOR SHALL COORDINATE WORK WITH ALL OTHER TRADES.
4. MECHANICAL CONTRACTOR SHALL ARRANGE ALL INSPECTIONS AND PAY ALL FEES. SUBMIT COPIES OF INSPECTIONS TO OWNER.
5. MODEL NUMBERS OF EQUIPMENT SHOWN ON THE SCHEDULES AND THROUGHOUT THE DRAWINGS AND SPECIFICATIONS SHALL NOT BE CONSIDERED COMPLETE AND MATERIAL SHALL NOT BE ORDERED BY MFR/MODEL ALONE. REVIEW THE COMPLETE DESCRIPTION, LOCATION AND ARRANGEMENT ON THE DRAWINGS, NOTES AND SPECIFICATIONS TO DETERMINE THE EXACT MATERIAL, CONFIGURATION AND ACCESSORIES TO BE ORDERED. THE MANUFACTURERS LISTED ARE THE BASIS OF DESIGN.
6. WHEN & WHERE APPLICABLE, THE NEW MECHANICAL EQUIPMENT MAY NOT BE USED FOR TEMPORARY VENTILATION, HEATING, COOLING OR SERVICE UNLESS SPECIFICALLY NOTED OTHERWISE FOR PHASED CONSTRUCTION OR OCCUPANCY.
7. WHERE EXISTING REFRIGERATION SYSTEMS ARE DISTURBED BY THE DEMOLITION OR NEW WORK, THE EXISTING REFRIGERANT GAS CHARGE SHALL NOT BE VENTED TO THE ATMOSPHERE BUT SHALL BE CAPTURED AND RECLAIMED/REUSED (IF IN GOOD CONDITION) OR DISPOSED OF IN A SAFE AND LEGAL MANNER.
8. WHERE EXISTING GLYCOL ANTI-FREEZE HYDRONIC SYSTEMS ARE IMPACTED BY THE WORK, THE EXISTING ANTI-FREEZE GLYCOL-WATER SOLUTIONS SHALL BE EITHER CAPTURED AND STORED FOR REUSE, OR DISPOSED OF IN A SAFE AND LEGAL MANNER. REFILL SYSTEMS WITH SAME LEVEL OF GLYCOL PROTECTION AS ORIGINAL (OR AS SPECIFIED NEW).

LOCATIONS & COORDINATION

1. THE MECHANICAL PLANS ARE DIAGRAMMATIC IN NATURE AND DO NOT ATTEMPT TO SHOW ALL REQUIRED OFFSETS AND FITTINGS. PROVIDE ALL NECESSARY OFFSETS, TRANSITIONS AND FITTINGS REQUIRED FOR A COMPLETE SYSTEM. REFER TO ARCHITECTURAL, STRUCTURAL, PLUMBING AND ELECTRICAL DRAWINGS FOR COORDINATION PURPOSES TO AVOID CONFLICTS.
2. INSTALL ALL MECHANICAL WORK AS HIGH AS POSSIBLE, TIGHT TO STRUCTURE ABOVE, UNLESS NOTED OTHERWISE. IN GENERAL IT IS THE INTENT THAT ALL MECHANICAL SYSTEMS BE CONCEALED ABOVE CEILINGS OR INSIDE WALLS AND SHAFTS.
3. COORDINATE ALL EXPOSED MECHANICAL SYSTEMS, PIPING AND DUCTWORK SO THAT LOCATIONS AND ROUTING ARE INTEGRATED WITH THE OTHER BUILDING ELEMENTS (WALLS, ROOFS, JOISTS, LIGHTS, ETC.). GENERALLY RUN SYSTEMS PARALLEL OR PERPENDICULAR TO BUILDING ELEMENTS AND RUN IN A MANNER TO CONCEAL OR BLEND WITH BUILDING LINES.
4. PROVIDE NEC CODE MINIMUM HORIZONTAL AND VERTICAL WORKING CLEARANCES FOR ALL ELECTRICAL PANELS AND EQUIPMENT. OFFSET MECHANICAL WORK AS REQUIRED.
5. COORDINATE ALL MECHANICAL WORK WITH THAT OF OTHER TRADES TO ENSURE PROPER INTERFACE, ADEQUATE CLEARANCES, AND TO AVOID CONFLICTS. PROVIDE FIELD COORDINATION AND/OR DRAWINGS PRIOR TO FABRICATION AND/OR INSTALLATION. CONFLICTS AND INTERFERENCES THAT COULD HAVE BEEN AVOIDED BY PROPER PRE-PLANNING AND COORDINATION SHALL BE REMOVED AND CORRECTED AT NO COST TO THE OWNER.
6. FIELD LOCATE ALL ROOF, FLOOR AND WALL PENETRATIONS AND ADJUST TO AVOID CONFLICT WITH STRUCTURAL ELEMENTS, BEAMS, CROSS-BRACING, ARCHITECTURAL ELEMENTS. THE MECHANICAL CONTRACTOR IS RESPONSIBLE FOR LOCATING AND COORDINATING ALL SAW CUTTING AND DRILLING REQUIRED FOR MECHANICAL SYSTEM OPENINGS.

SYSTEMS SUPPORTS & BASES

1. HANGERS, SUPPORTS AND ANCHORS FOR MECHANICAL SYSTEMS AND EQUIPMENT ARE NOT NECESSARILY DESIGNED OR SHOWN ON THE DRAWINGS. THE CONTRACTOR SHALL PROVIDE ALL NECESSARY SUPPORT MEMBERS, HANGERS, BRACKETS, HARDWARE, CLEVIS HANGERS, RODS, ETC. TO SECURELY HANG, BRACE AND SUPPORT MECHANICAL SYSTEMS, DUCTWORK, PIPING, EQUIPMENT AND OTHER DEVICES. ANCHOR SUPPORTS TO BUILDING STRUCTURE OR OTHER APPROPRIATE BUILDING ELEMENTS. SEE TYPICAL MECHANICAL DETAILS, ARCHITECTURAL AND STRUCTURAL DRAWINGS FOR ADDITIONAL INFORMATION, LIMITATIONS AND DETAILS.
2. DO NOT ANCHOR TO OR SUSPEND MECHANICAL SYSTEMS DIRECTLY OFF OF BARE METAL ROOF DECKING.
3. ROOF CURBS: ROOF CURBS SHALL BE MOUNTED PLUMB AND LEVEL ON PITCHED ROOFS. PROVIDE FACTORY CURBS WITH CORRECT SLOPE OR PROVIDE FIELD INSTALLED BLOCKING AND SHIMS BELOW CURB. ALL WOOD PRODUCTS SHALL BE PRESSURE TREATED LUMBER.

MECHANICAL & ELECTRICAL COORDINATION

1. INFORMATION LISTED SCHEDULES IS BASED ON THE EQUIPMENT AS SELECTED BY THE ENGINEER DURING THE DESIGN. THE ACTUAL EQUIPMENT SELECTED BY THE CONTRACTOR MAY BE DIFFERENT AND HAVE DIFFERING ELECTRICAL CHARACTERISTICS. PRIOR TO ROUGH-IN OR ORDERING EQUIPMENT, COORDINATE WITH THE ELECTRICAL CONTRACTOR TO ESTABLISH ACTUAL ELECTRICAL CHARACTERISTICS, ELECTRICAL LOAD, VOLTAGE, OVERCURRENT PROTECTION REQUIREMENTS FOR EACH PIECE OF EQUIPMENT, TO ASSURE PROPER ELECTRICAL CONNECTIONS AND SERVICES ARE PROVIDED.
2. COORDINATE THE EXACT LOCATION OF ALL ROOM THERMOSTATS AND/OR ROOM TEMPERATURE/CO2 SENSORS WITH ELECTRICAL PLANS & ROOM ELEVATIONS, PRIOR TO INSTALLATION, SO AS TO AVOID CONFLICT WITH CASEWORK, MARKER BOARDS, WALL SWITCHES, ETC.
3. COORDINATE THE FURNISHING AND INSTALLATION OF ALL ELECTRICAL DISCONNECT SWITCHES, STARTERS, VFDS, ETC., IN ORDER TO ASSURE THAT ALL ENERGIZED MECHANICAL IS PROVIDED WITH THE REQUIRED CIRCUIT PROTECTION METHODS AND CONTROL DEVICES. WHERE DRAWINGS NOTES, SCHEDULES AND EQUIPMENT SPECIFICATIONS ARE SILENT OR UNCLEAR AS TO WHICH DIVISION (22-PLBG, 23-HVAC, OR 26-ELECTRICAL) IS TO PROVIDE THESE DEVICES, THE CONTRACTOR SHALL CONTACT THE ENGINEER, PRIOR TO BID, FOR DIRECTION.

DUCTWORK & AIR DISTRIBUTION

1. VOLUME DAMPERS ARE NOT SHOWN FOR CLARITY. PROVIDE A DAMPER FOR EACH SUPPLY, RETURN AND EXHAUST OPENING AND IN BRANCHES WHERE THREE OR MORE OPENINGS ARE ASSOCIATED WITH THE BRANCH AND ELSEWHERE AS NOTED ON THE DRAWINGS OR SPECIFICATIONS.
2. PROVIDE CONCEALED DAMPER REGULATORS FOR ALL VOLUME DAMPERS OVER INACCESSIBLE CEILINGS AND SOFFITS. REFER TO ARCHITECTURAL DRAWINGS FOR CEILING TYPES.
3. PROVIDE DIFFUSER AND GRILLE FRAMES COMPATIBLE WITH ARCHITECTURAL CEILING TYPE. REFER TO ARCHITECTURAL REFLECTED CEILING PLANS FOR CEILING TYPE.
4. ALL DUCTWORK SIZES SHOWN ARE OUTSIDE DIMENSIONS, UNLESS SPECIFICALLY NOTED ON PLANS. DUCT LINER HAS BEEN ACCOUNTED FOR ON LINED DUCT. ADDITIONAL CLEARANCE WILL NEED TO BE ACCOUNTED FOR FOR EXTERNALLY INSULATED DUCT.
5. PROVIDE 1" THICK DUCT LINER IN ALL TRANSFER AIR DUCTWORK UNLESS NOTED OTHERWISE.
6. TURNING VANES: ALL RECTANGULAR DUCT ELBOWS SHALL BE PROVIDED WITH TURNING VANES, WHETHER OR NOT SPECIFICALLY SHOWN ON THE DUCTWORK DRAWING PLANS AND SECTIONS.
7. RADIUS ELBOWS (NO VANES): UTILIZE RADIUS ELBOWS ON ALL MATERIAL HANDLING TYPE DUCTWORK, KITCHEN HOOD EXHAUST DUCTS (BOTH TYPE I & II). LOCKER ROOM (LINT) EXHAUST, PATIENT ROOM (LINT) EXHAUST, AND ELSEWHERE AS INDICATED. CONTRACTOR'S OPTION TO UTILIZE RADIUS ELBOWS (WHERE SPACE ALLOWS) IN LIEU OF RECTANGULAR VANED ELBOWS.
8. PROVIDE TRANSITIONS AS REQUIRED TO TO CONNECT DUCTWORK TO TERMINAL UNITS, FANS, AIR HANDLERS CONNECTIONS, ETC.
9. PROVIDE FLEXIBLE DUCT FITTINGS ON CONNECTIONS TO ALL ENERGIZED AIR MOVING EQUIPMENT (FANS, AIR HANDLERS, ETC.).
10. MAXIMUM FLEXIBLE DUCTWORK LENGTH FROM MAIN DUCT TO DIFFUSERS SHALL BE APPROXIMATELY 5 FT, WITH MINIMAL OFFSET AND NO KINKS.

PIPING & HYDRONICS

1. PLENUMS: PIPES AND WIRING IN PLENUMS SHALL BE RATED FOR PLENUM USE. PVC, ABS, PLASTIC PIPING IS NOT ACCEPTABLE IN PLENUM APPLICATIONS UNLESS INSULATED AND WRAPPED IN APPROVED FIRE RATED JACKETING.
2. SMALL PIPING OR COMPONENTS: PIPING PLANS DO NOT NECESSARILY SHOW ALL SMALL PIPING OR COMPONENTS, INSTRUMENT TAPS OR DRAINS. PROVIDE ALL PIPING, VALVES, SPECIALTY ITEMS, INSTRUMENTATION, ETC. AS INDICATED ON THE PIPING FLOW DIAGRAMS, PIPING/EQUIPMENT DETAILS.
3. SIZES FOR SUPPLY AND RETURN PIPING CONNECTIONS TO EQUIPMENT, COILS, ETC. SHALL EQUAL TO THE FULL BRANCH RUN-OUT SIZES INDICATED ON THE DRAWINGS. PROVIDE REDUCERS AT EQUIPMENT CONNECTIONS AND BEFORE AND AFTER CONTROL VALVES, BALANCE VALVES, ETC. WHEN NECESSARY. ALL NEAR-COIL/EQUIPMENT PIPING SHALL BE FULL BRANCH LINE SIZE, INCLUDING BYPASS LINES, ETC. AND SHALL ONLY BE REDUCED FOR SMALLER DIAMETER CONTROL VALVES OR COIL/EQUIPMENT CONNECTIONS.
4. WHERE AIR HANDLING UNITS ARE PROVIDED WITH MULTIPLE (STACKED) COIL BANKS, PROVIDE DIVIDED BRANCH SUPPLY AND RETURN PIPING CONNECTIONS TO EACH COIL IN THE BANK, WHETHER OR NOT INDICATED ON THE DRAWINGS OR PIPING DETAILS. BRANCH PIPING TO EACH COIL IN THE BANK MAY BE REDUCED FROM THE MAIN INDICATED PIPE SIZE, BUT NOT TO BE SMALLER THAN THE COIL CONNECTION SIZES.
5. PROVIDE AIR VENTS ON HYDRONIC DISTRIBUTION PIPING AT HIGH POINTS, CHANGES IN DIRECTION FROM HORIZONTAL TO VERTICAL, AND ALONG HORIZONTAL RUNS AT APPROXIMATELY 100 FT. INTERVALS.
6. INSTALL UNIONS, IN PIPING 2" AND SMALLER, AT FINAL CONNECTIONS TO EACH PIECE OF EQUIPMENT, ON EACH SIDE OF CONTROL VALVES AND ELSEWHERE AS INDICATED.

TESTING, BALANCING AND COMMISSIONING

1. HVAC SYSTEMS INCLUDING AIR, HYDRONIC SYSTEMS SHALL BE BALANCED IN ACCORDANCE WITH THE 2018 WA STATE ENERGY CODE, THE PROJECT SPECIFICATIONS AND GENERALLY ACCEPTED ENGINEERING STANDARDS TO ENSURE AT A MINIMUM THAT AIR AND WATER FLOW RATES ARE MEASURED AND ADJUSTED TO DELIVER THE DESIGN RATES WITHIN SPECIFIED TOLERANCES.
2. COMMISSIONING IS NOT REQUIRED ON THIS PROJECT.

CEILING TILES AND GRID

1. CONTRACTOR SHALL REPLACE ANY CEILING TILES OR GRID WHERE DAMAGED DURING DEMO/CONSTRUCTION. NEW TILES AND/OR GRID ARE REQUIRED FOR INFILL WHERE ITEMS ARE REMOVED OR WHERE ITEMS PENETRATING THE TILE ARE REMOVED.

MECHANICAL ABBREVIATIONS

AAV	AUTOMATIC AIR VENT
ABV	ABOVE
AD	ACCESS DOOR
AFS	AIR FLOW SWITCH
AFF	ABOVE FINISHED FLOOR
AG	ABOVE GROUND
AHU	AIR HANDLING UNIT
AL	ACOUSTICALLY LINED
ALUM	ALUMINUM
APD	AIR PRESSURE DROP
ARCH	ARCHITECT
AVG	AVERAGE
AWT	AVERAGE WATER TEMPERATURE
BAS	BUILDING AUTOMATION SYSTEM
BDD	BACKDRAFT DAMPER
BFF	BELOW FINISHED FLOOR
BFP	BACKFLOW PREVENTER
BG	BELOW GROUND
BHP	BRAKE HORSEPOWER
BLDG	BUILDING
BTU	BRITISH THERMAL UNIT
BTUH	BRITISH THERMAL UNITS PER HOUR
BOD	BOTTOM OF DUCT
BOP	BOTTOM OF PIPE
BSMT	BASEMENT
BV	BALANCING VALVE
C	CELSIUS
CA	COMBUSTION AIR
CAP	CAPACITY
CC	CENTER TO CENTER OR COOLING COIL
CD	CEILING DIFFUSER
CFM	CUBIC FEET PER MINUTE
CG	CEILING GRILLE
CI	CAST IRON
CLG	CEILING
COG	CLEAN OUT TO GRADE
CO	CLEAN OUT
COMB	COMBUSTION
COND	CONDENSATE OR CONDENSER
CONC	CONCRETE
CONST	CONSTRUCTION
COP	COEFFICIENT OF PERFORMANCE
CU	COPPER
CUH	CABINET UNIT HEATER
CW	COLD WATER
CU	CONDENSING UNIT
CR	CONDENSATE RETURN
CL	CENTER LINE
D	DEEP OR DEPTH
DB	DRY BULB OR DECIBEL
DBA	A-WEIGHTED DECIBELS
DDC	DIRECT DIGITAL CONTROLS
DEMO	DEMOLITION
DN	DOWN
DIA,	DIAMETER Ø
DPS	DIFFERENTIAL PRESSURE SWITCH
DP	DROP
DPR	DAMPER
DWG	DRAWING
(E)	EXISTING
EA	EACH OR EXHAUST AIR
EAT	ENTERING AIR TEMPERATURE
EDB	ENTERING DRY BULB
EEF	ENERGY EFFICIENCY RATIO
EF	EXHAUST FAN
EFF	EFFICIENCY
EG	EXHAUST GRILLE
ELEC	ELECTRIC OR ELECTRICAL
ELEV	ELEVATION
EMCS	ENERGY MANAGEMENT AND CONTROL SYSTEM
ENCL	ENCLOSURE
EQUIP	EQUIPMENT
ESP	EXTERNAL STATIC PRESSURE
EST	ESTIMATE(D)
EWB	ENTERING WET BULB
EWT	ENTERING WATER TEMPERATURE
EXH	EXHAUST
F	FARENHEIT
FCU	FAN COIL UNIT
FD	FIRE DAMPER OR FLOOR DRAIN
FF	FINAL FILTER
FLA	FULL LOAD AMPS
FLR	FLOOR
FLEX	FLEXIBLE
FOB	FLAT ON BOTTOM
FOT	FLAT ON TOP
FPM	FEET PER MINUTE
FPI	FINS PER INCH
FPS	FEET PER SECOND
FP	FIRE PROTECTION
FS	FLOOR SINK
FT	FEET/FOOT OR FINNED TUBE
FV	FACE VELOCITY
G	GAS (NATURAL)
GA	GAUGE OR GAGE
GAL	GALLONS
GPM	GALLONS PER MINUTE
GPH	GALLONS PER HOUR
GYP	GYPSUM WALL BOARD
H	HIGH OR HEIGHT
HB	HOSE BIBB
HC	HEATING COIL
HD	HEAD
HGBP	HOT GAS BYPASS
HL	HIGH LIMIT
HP	HORSEPOWER OR HIGH POINT
HTG	HEATING
HUM	HUMIDIFIER
HW	HOT WATER
HX	HEAT EXCHANGER
HZ	HERTZ
ID	INSIDE DIAMETER
INV	INVERT
I.E.	INVERT ELEVATION
INSUL	INSULATION
IND	INDIRECT
KW	KILOWATT
KWH	KILOWATT HOUR
L	LENGTH OR LOUVER
LAT	LEAVING AIR TEMPERATURE
LBS	POUNDS
LDB	LEAVING DRY BULB
LF	LINEAR FOOT
LWT	LEAVING WATER TEMPERATURE
LG	LONG OR LENGTH
L/P	LOW POINT
LWB	LEAVING WET BULB
LWG	LOW WALL GRILLE
LWT	LEAVING WATER TEMPERATURE
LVG	LEAVING
MCA	MINIMUM CIRCUIT AMPACITY
MOCP	MAXIMUM OVERCURRENT PROTECTION
MBH	THOUSAND (1000) BTU PER HOUR
MCC	MOTOR CONTROL CENTER
MFR	MANUFACTURER
MS	MOTOR STARTER
MTD	MOUNTED
MTG	MOUNTING
MAU	MAKE-UP AIR UNIT
NC	NORMALLY CLOSED
NO	NORMALLY OPEN
MOD	MOTOR-OPERATED DAMPER
NIC	NOT IN CONTRACT
NPT	NATIONAL PIPE THREAD
NTS	NOT TO SCALE
OA	OUTDOOR AIR
OBD	OPPOSED BLADE DAMPER
OD	OUTSIDE DIAMETER
OSA	OUTSIDE AIR
OAT	OUTSIDE AIR TEMPERATURE
OF	OVERFLOW
OFCI	OWNER FURNISHED, CONTRACTOR INSTALLED
PD	PRESSURE DROP
PH	PHASE
PIAC	PRESSURE INDEPENDENT AIR CONTROLLER
PG	PROPYLENE GLYCOL
PLBG	PLUMBING
POC	POINT OF CONNECTION
PRV	PRESSURE REDUCING VALVE
PSI	POUNDS PER SQUARE INCH
PSIG	POUNDS PER SQUARE INCH GAUGE
PT	PRESSURE & TEMPERATURE
RA	RETURN AIR
RAG	RETURN AIR GRILLE
RAT	RETURN AIR TEMPERATURE
RD	ROOF DRAIN
RET	RETURN
REV	REVISION
RF	RETURN FAN
RPM	REVOLUTIONS PER MINUTE
RHW	RECIRCULATING HOT WATER
RTU	ROOF TOP UNIT
S	SINK
SA	SUPPLY AIR
SAT	SUPPLY AIR TEMPERATURE
SEER	SEASONAL ENERGY EFFICIENT RATIO
SENS	SENSIBLE
SD	SMOKE DETECTOR OR DAMPER
SF	SUPPLY FAN
SFD	SMOKE-FIRE DAMPER
SHT	SHEET
SP	STATIC PRESSURE
SQ	SQUARE
SQ	FT SQUARE FOOT
SS	STAINLESS STEEL
STD	STANDARD
TA	TRANSFER AIR
TEMP	TEMPERATURE
TH	THICK OR THICKNESS
TOD	TOP OF DUCT
TOP	TOP OF PIPE
TP	TRAP PRIMER
TU	TERMINAL UNIT
TYP	TYPICAL
UF	UNDER FLOOR
UG	UNDERGROUND
UH	UNIT HEATER
UR	URINAL
US	UNDER SLAB
V	VENT OR VOLT
VAC	VACUUM
VAV	VARIABLE AIR VOLUME
VEL	VELOCITY
VFD	VARIABLE FREQUENCY DRIVE
VTR	VENT THRU ROOF
VD	VOLUME DAMPER
W	WIDE OR WIDTH
WB	WET BULB
WC	WATER CLOSET
WCO	WALL CLEAN OUT
WH	WATER HEATER
WG	WATER GAUGE
WPD	WATER PRESSURE DROP
WT	WEIGHT

HVAC PIPING LEGEND

HWS	HEATED WATER SUPPLY
HWR	HEATED WATER RETURN
CWS	CHILLED WATER SUPPLY
CWR	CHILLED WATER RETURN
LPS	LOW PRESSURE STEAM
CR	STEAM CONDENSATE RETURN
D	DRAIN
PC	PUMPED CONDENSATE
RL	REFRIGERANT LIQUID
RS	REFRIGERANT SUCTION
REF	REFRIGERANT LINE SET
G	NATURAL GAS

GENERAL PIPING SYMBOLS

- PIPE PITCH DIRECTION (DOWN)
- DIRECTION OF FLOW
- ANCHOR
- REDUCER OR INCREASER
- ECCENTRIC REDUCER
- TOP CONNECTION
- BOTTOM CONNECTION
- SIDE CONNECTION
- CAPPED OUTLET
- RISE OR DROP IN PIPE
- UNION
- PIPE UP
- PIPE DOWN

VALVE SYMBOLS

- GENERIC VALVE (AS SPECIFIED)
- GATE VALVE
- GLOBE VALVE
- BUTTERFLY VALVE
- BALL VALVE
- CHECK VALVE
- INDICATES FLANGED VALVE (USE ON OVER 2" SIZES)
- WYE STRAINER (WITH BALL VALVE & QUICK COUPLE HOSE CONNECTOR)
- FLEXIBLE CONNECTION
- ANGLE GLOBE VALVE
- MODULATING CONTROL VALVE
- MODULATING CONTROL BUTTERFLY VALVE
- TWO POSITION CONTROL VALVE
- THREE-WAY MODULATING CONTROL VALVE
- THREE-WAY TWO POSITION CONTROL VALVE
- PRESSURE REGULATING VALVE
- PRESSURE SAFETY RELIEF VALVE
- AUTOMATIC BALANCING VALVE
- WATER BALANCE DEVICE
- CIRCUIT SETTER VALVE
- PLUG VALVE
- PRESSURE REDUCING VALVE (PRV)
- THERMOMETER
- PRESSURE GAGE
- TEST PLUG (PRESSURE/TEMPERATURE)
- AV — AUTOMATIC AIR VENT
- MV — MANUAL AIR VENT
- QUICK-COUPLE HOSE CONNECTOR
- A — PLANT COMPRESSED AIR OUTLET QUICK CONNECT
- PUMP

NOTE: SYMBOLS AND ABBREVIATIONS ON THE DRAWINGS ARE TO BE INTERPRETED IN ACCORDANCE WITH THE LEGENDS ON THIS SHEET. NOT ALL SYMBOLS AND ABBREVIATIONS INDICATED ON THIS SHEET ARE NECESSARILY USED FOR THIS PROJECT.

HVAC SYMBOLS

- 12x8 — RECT. DUCT SIZE (INCHES) (FACING SIDE LISTED FIRST)
- 12Ø — CIRCULAR DUCT DIAMETER (INCHES)
- 24x18 F.O. — FLAT OVAL DUCT SIZE (INCHES)(FACING SIDE LISTED FIRST)
- ACOUSTICALLY LINED DUCT, 1" THICK UNLESS NOTED OTHERWISE, DUCT SIZE INCLUDES ALLOWANCE FOR LINER
- # — FIRE OR FIRE/SMOKE DAMPER (# INDICATES TYPE)
- TURNING VANES
- HIGH EFFICIENCY BRANCH TAP
- FLEXIBLE DUCT CONNECTOR
- VD — VOLUME CONTROL DAMPER (SEE GENERAL NOTES)
- M — MOTORIZED DAMPER & ACTUATOR
- SUPPLY/OSA DUCT TURNED UP
- SUPPLY/OSA DUCT TURNED DOWN
- RETURN AIR DUCT TURNED UP
- RETURN AIR DUCT TURNED DOWN
- EXHAUST/RELIEF DUCT TURNED UP
- EXHAUST/RELIEF DUCT TURNED DOWN
- FLEXIBLE DUCT
- SIDEWALL DIFFUSER/GRILLE
- LINEAR SLOT DIFFUSER
- AIR OUTLET (SUPPLY)
- AIR INLET (RETURN/RELIEF)
- AIR INLET (EXHAUST)
- LOUVER
- T A — THERMOSTAT OR TEMPERATURE SENSOR (SUBSCRIPT A=AVERAGING, G=PROTECTIVE GAURD, C=CO2 SENSOR)
- H — HUMIDISTAT OR HUMIDITY SENSOR
- CO2 — CARBON DIOXIDE SENSOR
- SD — SMOKE DETECTOR

GENERAL SYMBOLS

- 1 / M5.01 — SECTION IDENTIFYING NUMBER; CROSS-SECTION SYMBOL; SHEET WHERE SECTION IS SHOWN
- 1 / M6.01 — DETAIL IDENTIFYING NUMBER; DETAIL SYMBOL; SHEET WHERE DETAIL IS SHOWN
- POINT OF CONNECTION (POC) SYMBOL
- AHU-1 — EQUIP. TYPE-NUMBER (SEE SCHEDULES)
- AHU-1 — EQUIPMENT IDENTIFIER (OPTIONAL TAG STYLE)
- SIZE # CFM — DIFFUSER OR REGISTER/GRILLE TAG
  - CFM VALUE
  - DIFFUSER TYPE (SEE SCHEDULES)
  - DIFFUSER SIZE
- 1 — REVISION CLOUD AND REVISION NUMBER

LINEWEIGHT LEGEND

- LIGHT SOLID LINES INDICATES EXISTING ITEMS TO REMAIN
- LIGHT DASHED LINES GENERALLY INDICATE HIDDEN OR UNDERGROUND PIPING OR EQUIPMENT
- DARK LINE INDICATES NEW PIPING & EQUIPMENT
- DARK DASHED LINES INDICATE EXISTING PIPING & EQUIPMENT TO BE REMOVED (FLOOR PLANS & SECTIONS)

NOTE:
LINEWEIGHTS ARE GENERAL GUIDES ONLY. REFER TO DRAWING NOTES AND WORK PHASES (DEMO OR NEW) FOR ADDITIONAL DISTINCTIONS.

DESIGN FIRM:

MSI ENGINEERS
www.msi-engineers.com

CONSULTANTS:

PROVISIONAL STAMP:

AARON S. DONNELLY
STATE OF WASHINGTON
43373
REGISTERED PROFESSIONAL ENGINEER

WASHINGTON STATE UNIVERSITY

Facilities Services
2425 E. Grimes Way
Pullman, Wa. 99164-1150
PH 509-335-5571
FAX 509-335-9304

WEGNER HALL

RM 310, 320B AND 320BA HVAC UPGRADE

0045

MARK	DATE	DESCRIPTION
	10/25/22	REVISED BID SET

CAD DWG FILE:	
DESIGNED BY: ASD	
DRAWN BY: RD	CHECKED BY: ASD
PROJECT No. 1654-2022	FILE No: TBD
COPYRIGHT: WASHINGTON STATE UNIVERSITY	

SHEET TITLE

LEGENDS, ABBREVIATIONS, GENERAL NOTES

M0.01

SHEET 2 OF 11 SHEETS

FAN COIL SCHEDULE

FC-#	MFR	MODEL #	TYPE	SUPPLY FAN						MIN OSA CFM	HOT WATER HEATING								CHILLED WATER COOLING										UNIT SOUND DATA (INLET - DISCHARGE - RADIATED) (DB)								WT LBS	ELECTRICAL			NOTES
				MAX CLG CFM	HTG CFM	ESP IN.WC.	RPM	HP	BHP		MBH	EDB	LDB	GPM	ROWS /FPI	APD IN.WC.	WPD FT.WC.	CONTROL VALVE	MBH TOTAL	MBH SENS	EDB	EWB	LDB	GPM	ROWS /FPI	APD IN.WC.	WPD FT.WC.	CONTROL VALVE	63 HZ	125 HZ	250 HZ	500 HZ	1,000 HZ	2,000 HZ	4,000 HZ	8,000 HZ		V/PH	MCA	MOCP	
FC-310	DAIKIN	PRECISELINE BCHD0081	HORIZONTAL 4-PIPE FAN COIL	500	200	1.5	1573	0.50	0.3	75	18.4	56	90	2.0	2/12	0.10	2.0	2-WAY	18.4	13.8	78	65	53.0	3.7	6/12	0.36	2.3	2-WAY	75-87-63	75-85-63	66-76-52	62-72-46	64-72-48	57-68-45	56-67-29	49-64-23	300	208/1	3.6	15	1
FC-320BA	DAIKIN	PRECISELINE BCHD0081	HORIZONTAL 4-PIPE FAN COIL	500	200	1.5	1573	0.50	0.3	85	18.4	56	90	2.0	2/12	0.10	2.0	2-WAY	18.4	13.8	78	65	53.0	3.7	6/12	0.36	2.3	2-WAY	75-87-63	75-85-63	66-76-52	62-72-46	64-72-48	57-68-45	56-67-29	49-64-23	300	208/1	3.6	15	1
FC-320B	DAIKIN	PRECISELINE SIZE 008	HORIZONTAL 4-PIPE FAN COIL	700	200	1.5	1,725	0.75	0.5	100	26.0	58	95	2.7	2/12	0.03	2.1	2-WAY	24.2	18.6	78	65	53.7	4.8	6/12	0.16	3.7	2-WAY	75-87-63	72/75	80/83	75/80	77/83	76/82	71/79	66/74	300	208/1	3.6	15	1

NOTES:

1 TYPICAL FEATURES / OPTIONS / ACCESSORIES SHALL INCLUDE:
- DISCONNECT BY DIV 26.
- HEATING COIL PERFORMANCE BASED ON 140°F EWT / 120°F LWT WITH 0% PROPYLENE GLYCOL AND 0°F AMBIENT.
- COOLING COIL PERFORMANCE BASED ON 45°F EWT / 55°F LWT WITH 0% PROPYLENE GLYCOL AND 96°F DB/67°F WB AMBIENT.
- DDC CONTROLS BY CONTROL CONTRACTOR.
- EC MOTORS WITH SPEED CONTROL DIAL ON THE MOTOR.
- TOTAL STATIC PRESSURE SHALL INCLUDE 0.5 IN.WC. FOR LOADED FILTERS.
- 2" MERV 13 FILTER
- FACTORY MOUNTED FREEZESTAT
- RIGHT/LEFT HAND COIL CONNECTIONS TO BE COORDINATED WITH CONTRACTOR

GRAVITY VENTILATOR SCHEDULE

GV-#	MFR	MODEL	SERVICE	CFM	W (IN)	L (IN)	H (IN)	# LOUVERS HIGH	PD (WC IN)	THROAT AREA (SQ FT)	THROAT VELOCITY (FT/MIN)	NOTES
GV-1	TWIN CITY FAN	TIL	INTAKE AIR	1700 (ECONO MODE)	12	36	10.5	3	0.05	3.0	566	1

NOTES:

1 TYPICAL FEATURES / OPTIONS / ACCESSORIES SHALL INCLUDE:
- PREFABRICATED INSULATED 18" TALL ROOF CURB
- BIRD SCREEN

AIR OUTLETS SCHEDULE

TAG	MFR	MODEL	SERVICE	TYPE	MOUNTING	PATTERN	FINISH	BLADE			NOTES
								SPC (")	POS	DEFL (")	
1	TITUS	MCD	CEILING SUPPLY	DIFFUSER	LAY-IN	4-WAY ADJUST.	OFF WHITE	-	5	-	1 2 3 4
2	TITUS	355RL	CEILING RETURN/ EXHAUST	GRILLE	LAY-IN	FIXED	OFF WHITE	1/2"	FACE HORIZ.	35°	1 3 4

NOTES:

1 PAINT THE INSIDE SURFACE OF THE DUCTWORK CONNECTION FLAT BLACK, UNLESS OTHERWISE PROVIDED WITH DUCT LINER.

2 PROVIDE BALANCING DAMPER IN BRANCH DUCT SERVING AIR OUTLET AT TAKEOFF FROM TRUNK DUCT.

3 PROVIDE TRANSITION FROM AIR OUTLET NECK TO BRANCH DUCT AS REQUIRED.

4 PROVIDE 24"x24" PAN FOR LAY-IN CEILING INSTALLATION ON ALL SUPPLY DIFFUSERS AND RETURN/EXHAUST GRILLES LARGER THAN 12" IN BOTH DIRECTIONS.
PROVIDE 1/2 PAN (24"x12") ON RETURN EXHAUST GRILLES LESS THAN 12" WIDE) (SEE HVAC FLOOR PLANS).
SELECT RETURN GRILLES IN THE COMMONS AREA ARE NOMINAL 2'X4' SIZE FOR LAY-IN APPLICATION AND THE PAN SIZE SHALL BE ADJUSTED ACCORDINGLY.

5 ADJUST MODULAR CORE TO OPTIMIZE AIR FLOW PATTERN IN SPACE (1-WAY, 2-WAY, 3-WAY OR 4-WAY BLOW) AND TO MINIMIZE DRAFTS.

PUMP SCHEDULE

P-#	MFR	MODEL	TYPE	SERVICE	FLOW (GPM)	HEAD (FT)	GLYCOL	MOTOR			NOTES
								HP	V/PH	RPM	
P-310-H	TACO	008-IFC	IN-LINE CARTRIDGE CIRCULATOR	FC-310 HEATING COIL	2.0	15	0%	1/25	208/1	3250	1
P-310-C	TACO	008-IFC	IN-LINE CARTRIDGE CIRCULATOR	FC-310 COOLING COIL	3.7	14	0%	1/25	208/1	3250	1
P-320BA-H	TACO	008-IFC	IN-LINE CARTRIDGE CIRCULATOR	FC-320BA HEATING COIL	2.0	15	0%	1/25	208/1	3250	1
P-320BA-C	TACO	008-IFC	IN-LINE CARTRIDGE CIRCULATOR	FC-320BA COOLING COIL	3.7	14	0%	1/25	208/1	3250	1
P-320B-H	TACO	008-IFC	IN-LINE CARTRIDGE CIRCULATOR	FC-320B HEATING COIL	2.7	14	0%	1/25	208/1	3250	1
P-320B-C	TACO	008-IFC	IN-LINE CARTRIDGE CIRCULATOR	FC-320B COOLING COIL	4.8	13	0%	1/25	208/1	3250	1

NOTES:

1 TYPICAL FEATURES / OPTIONS / ACCESSORIES SHALL INCLUDE:
- DISCONNECT BY DIV 26.
- FLANGED CONNECTIONS SIZED TO MATCH PIPING
- BRONZE FITTED
- INTEGRAL FLOW CHECK VALVE

DESIGN FIRM:

MSI ENGINEERS
www.msi-engineers.com

CONSULTANTS:

PROVISIONAL STAMP:

AARON S. DONNELLY
STATE OF WASHINGTON
43373
PROFESSIONAL ENGINEER
REGISTERED

WASHINGTON STATE UNIVERSITY

Facilities Services
2425 E. Grimes Way
Pullman, Wa. 99164-1150
PH 509-335-5571
FAX 509-335-9304

WEGNER HALL

RM 310, 320B AND 320BA HVAC UPGRADE

0045

MARK	DATE	DESCRIPTION
	10/25/22	REVISED BID SET

CAD DWG FILE:
DESIGNED BY: ASD
DRAWN BY: RD | CHECKED BY: ASD
PROJECT No. 1654-2022 | FILE No: TBD
COPYRIGHT: WASHINGTON STATE UNIVERSITY

SHEET TITLE

EQUIPMENT SCHEDULES

M0.02

SHEET 3 OF 11 SHEETS

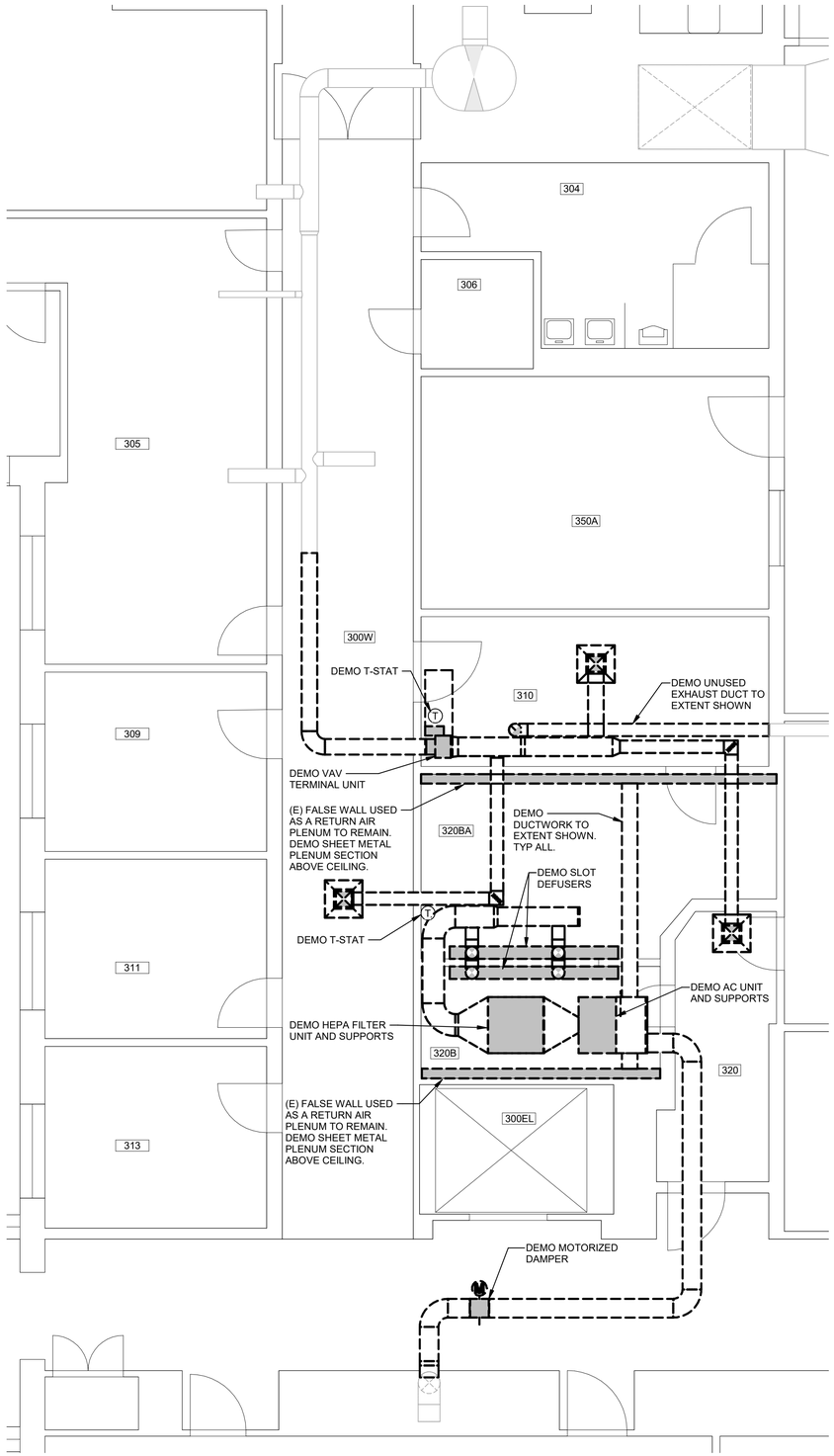

N 1 **LEVEL 3 - HVAC - DEMO**
SCALE: 1/4" = 1'-0"

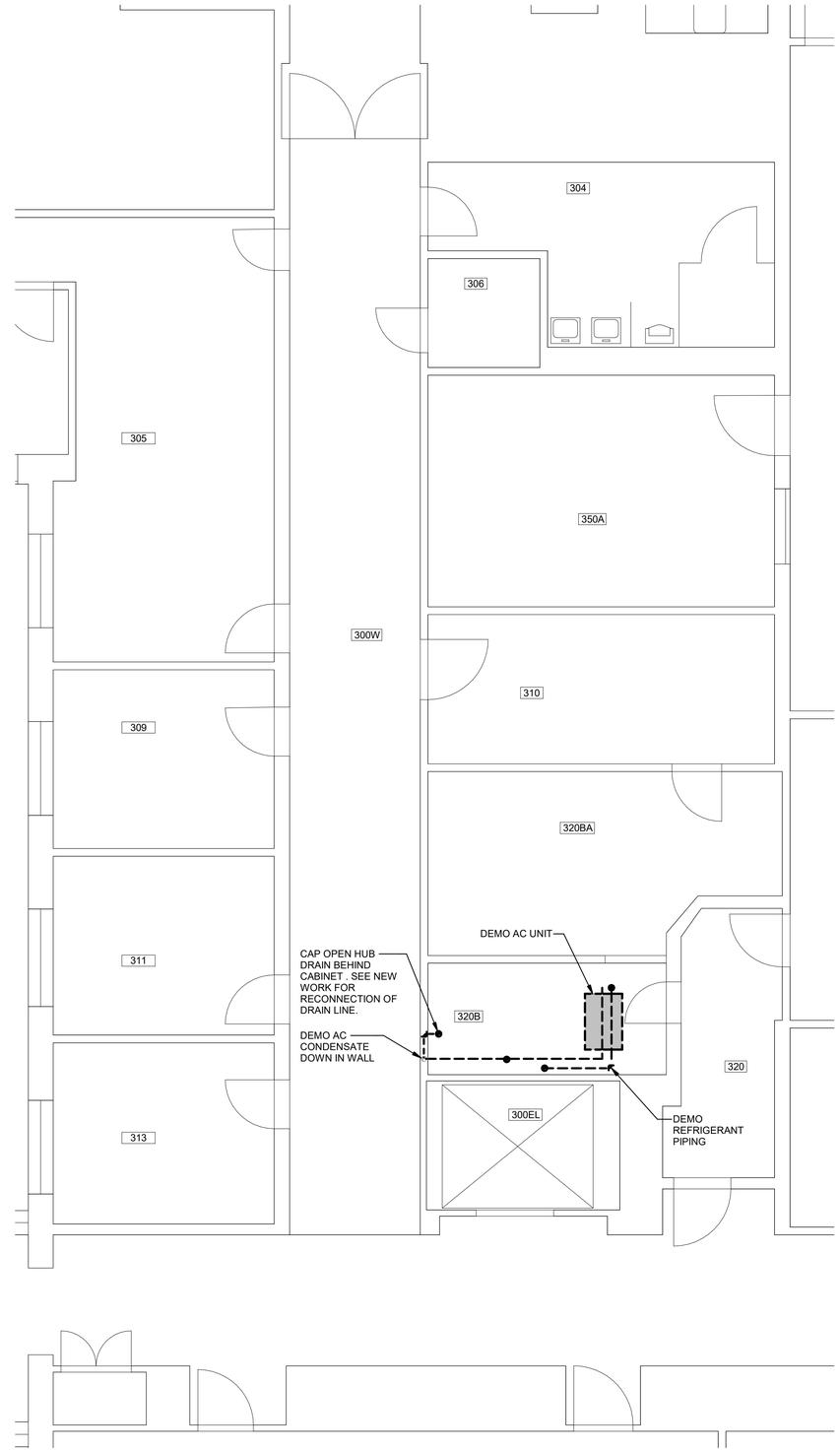

N 2 **LEVEL 3 - PIPING - DEMO**
SCALE: 1/4" = 1'-0"

DESIGN FIRM:

MSI ENGINEERS
www.msi-engineers.com

CONSULTANTS:

PROVISIONAL STAMP:

AARON S. DONNELLY
STATE OF WASHINGTON
43373
REGISTERED
PROFESSIONAL ENGINEER

WASHINGTON STATE UNIVERSITY

Facilities Services
2425 E. Grimes Way
Pullman, Wa. 99164-1150
PH 509-335-5571
FAX 509-335-9304

WEGNER HALL

RM 310, 320B AND 320BA HVAC UPGRADE

0045

MARK	DATE	DESCRIPTION
	10/25/22	REVISED BID SET

CAD DWG FILE:
DESIGNED BY: ASD
DRAWN BY: MRH | CHECKED BY: ASD
PROJECT No. 1654-2022 | FILE No: TBD

COPYRIGHT: **WASHINGTON STATE UNIVERSITY**

SHEET TITLE

THIRD FLOOR MECHANICAL DEMO

M2.01

SHEET 4 OF 11 SHEETS

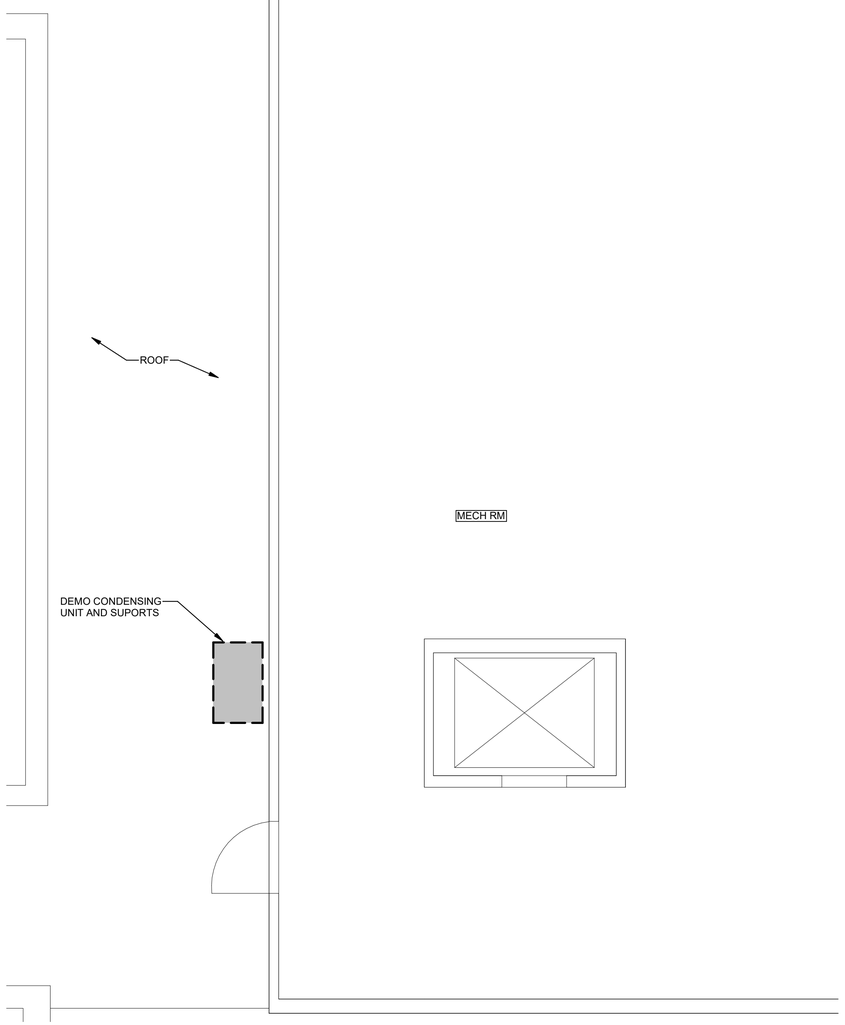

N 1 **PENTHOUSE - HVAC DEMO**
SCALE: 1/4" = 1'-0"

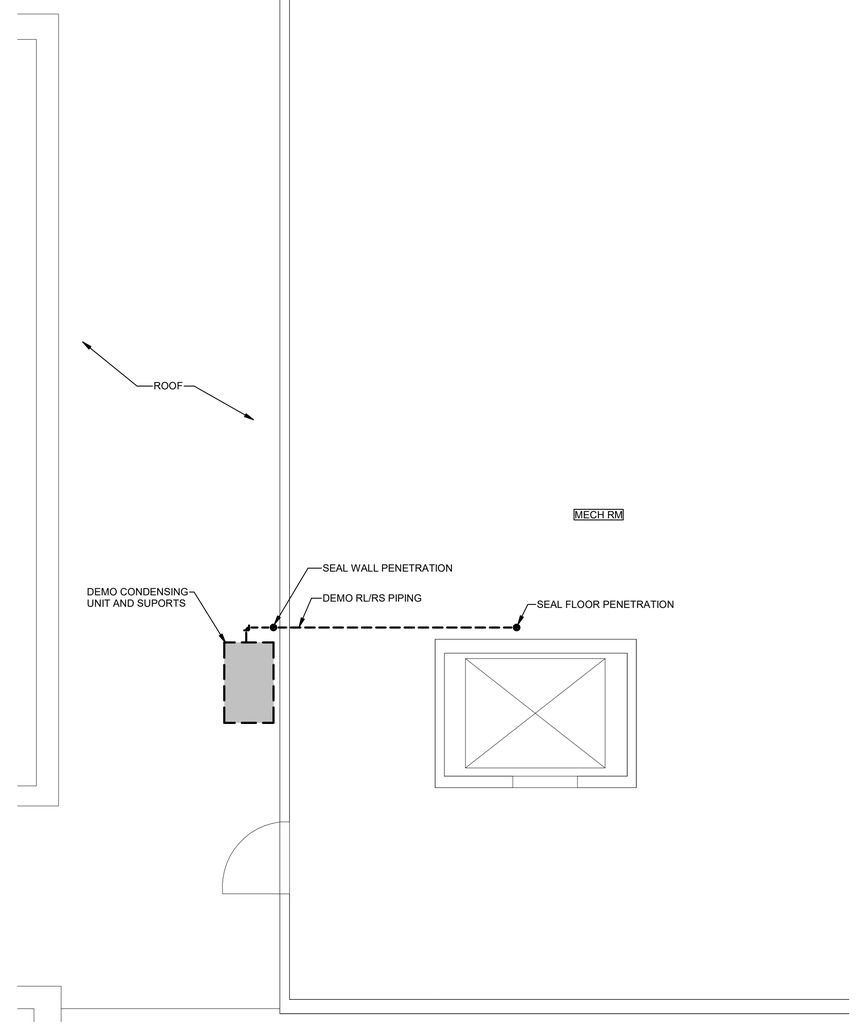

N 2 **PENTHOUSE - PIPING - DEMO**
SCALE: 1/4" = 1'-0"

DESIGN FIRM:

MSI ENGINEERS
www.msi-engineers.com

CONSULTANTS:

PROVISIONAL STAMP:

AARON S. DONNELLY
STATE OF WASHINGTON
43373
REGISTERED
PROFESSIONAL ENGINEER

WASHINGTON STATE UNIVERSITY

Facilities Services
2425 E. Grimes Way
Pullman, Wa. 99164-1150
PH 509-335-5571
FAX 509-335-9304

WEGNER HALL

RM 310, 320B AND 320BA HVAC UPGRADE

0045

MARK	DATE	DESCRIPTION
	10/25/22	REVISED BID SET

CAD DWG FILE:
DESIGNED BY: ASD
DRAWN BY: RD | CHECKED BY: ASD
PROJECT No. 1654-2022 | FILE No: TBD

COPYRIGHT: **WASHINGTON STATE UNIVERSITY**

SHEET TITLE

PENTHOUSE MECHANICAL DEMO

M2.02

SHEET 5 OF 11 SHEETS

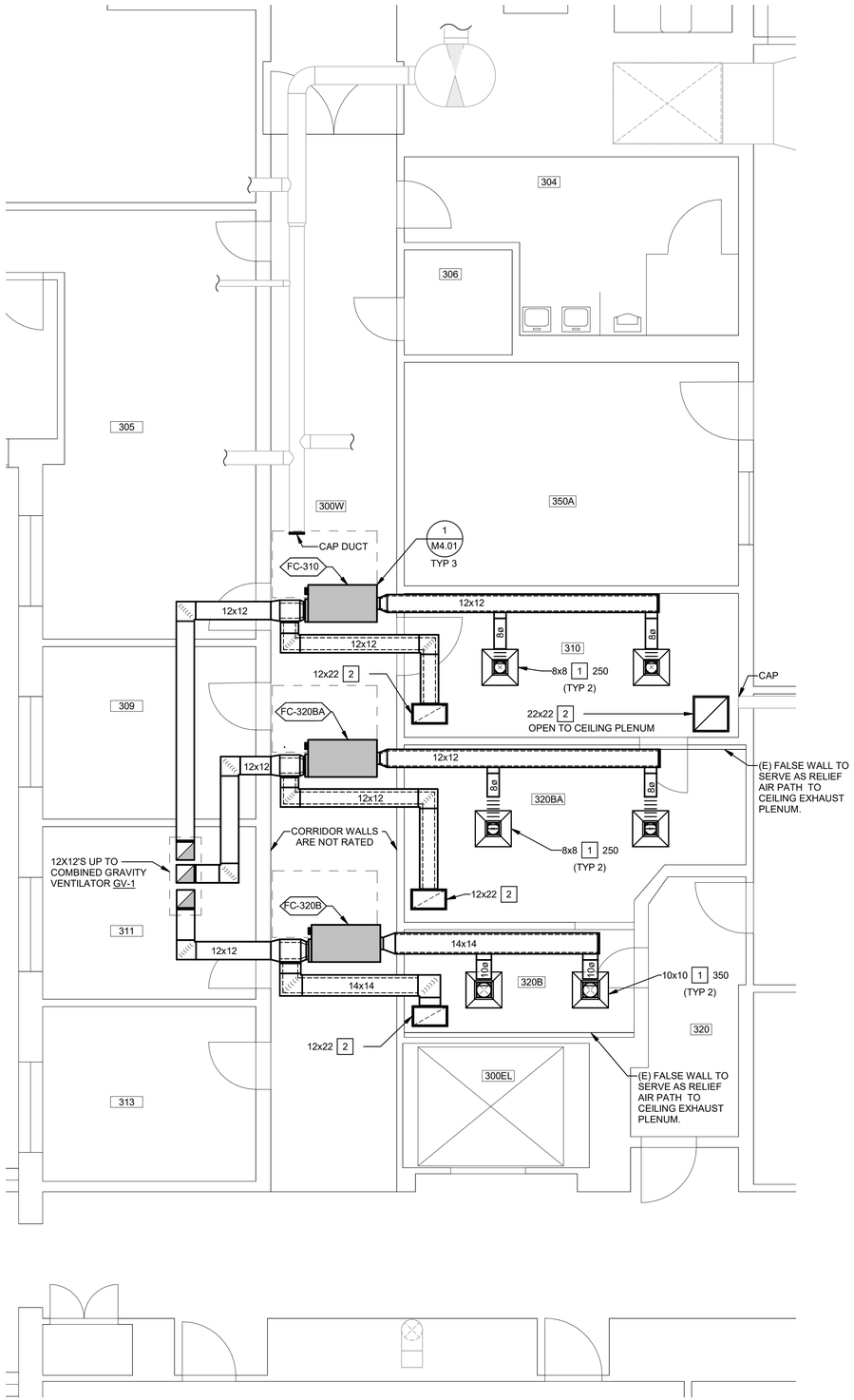

1 LEVEL 3 - HVAC

SCALE: 1/4" = 1'-0"

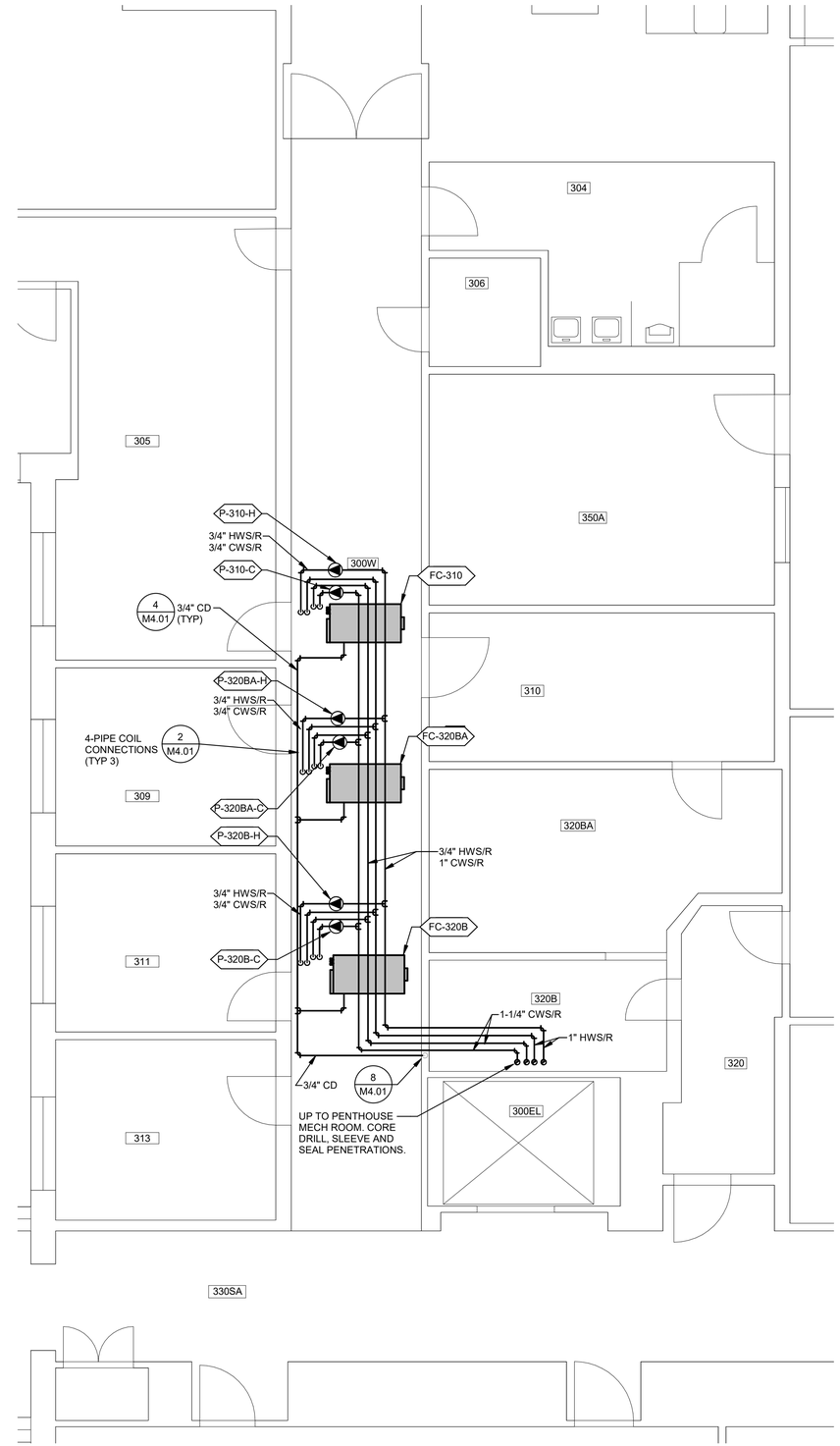

2 LEVEL 3 - PIPING

SCALE: 1/4" = 1'-0"

DESIGN FIRM:

MSI ENGINEERS
www.msi-engineers.com

CONSULTANTS:

PROVISIONAL STAMP:

AARON S. DONNELLY
STATE OF WASHINGTON
43373
REGISTERED
PROFESSIONAL ENGINEER

WASHINGTON STATE UNIVERSITY

Facilities Services
2425 E. Grimes Way
Pullman, Wa. 99164-1150

PH 509-335-5571
FAX 509-335-9304

WEGNER HALL

RM 310, 320B AND 320BA HVAC UPGRADE

0045

MARK	DATE	DESCRIPTION
	10/25/22	REVISED BID SET

CAD DWG FILE:

DESIGNED BY: ASD

DRAWN BY: RD | CHECKED BY: ASD

PROJECT No. 1654-2022 | FILE No: TBD

COPYRIGHT: **WASHINGTON STATE UNIVERSITY**

SHEET TITLE

THIRD FLOOR MECHANICAL

M3.01

SHEET 6 OF 11 SHEETS

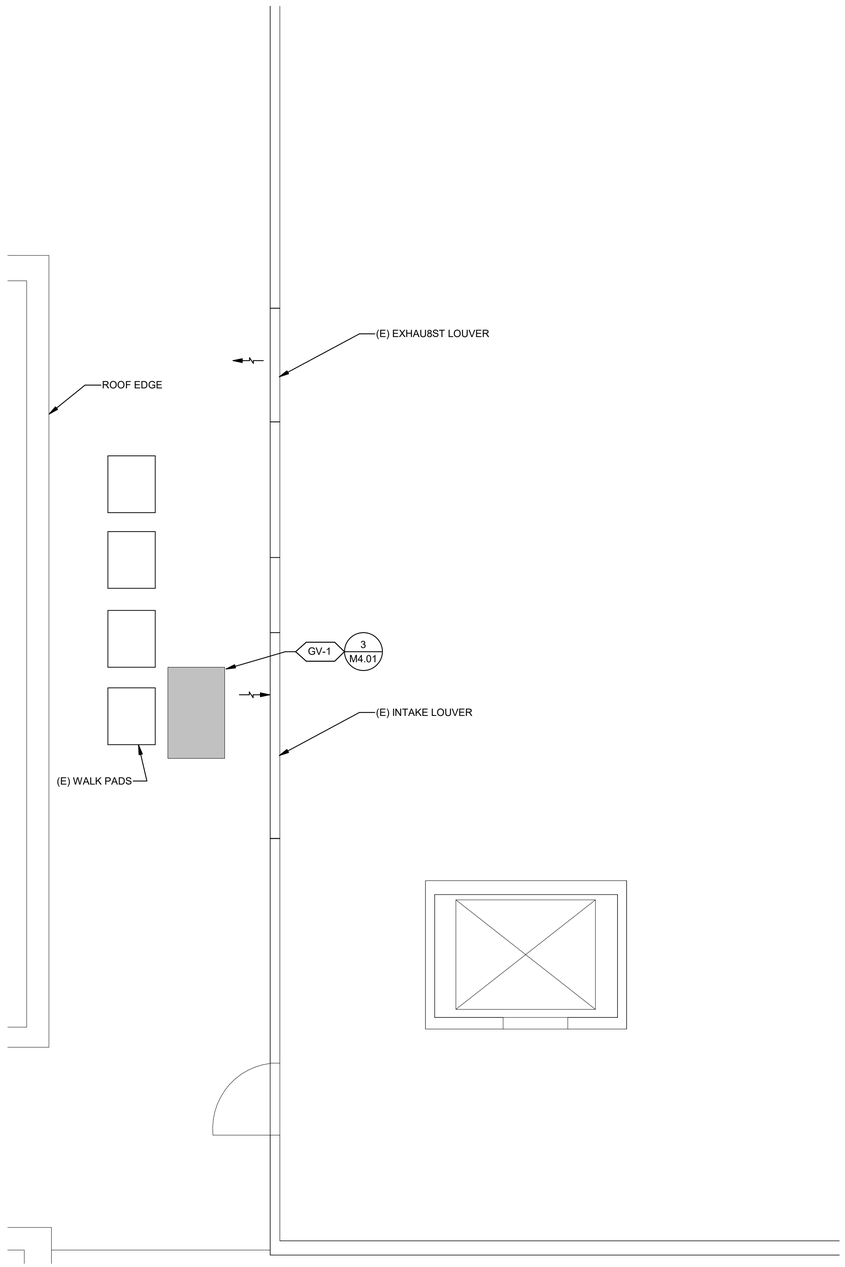

1 PENTHOUSE - HVAC
SCALE: 1/4" = 1'-0"

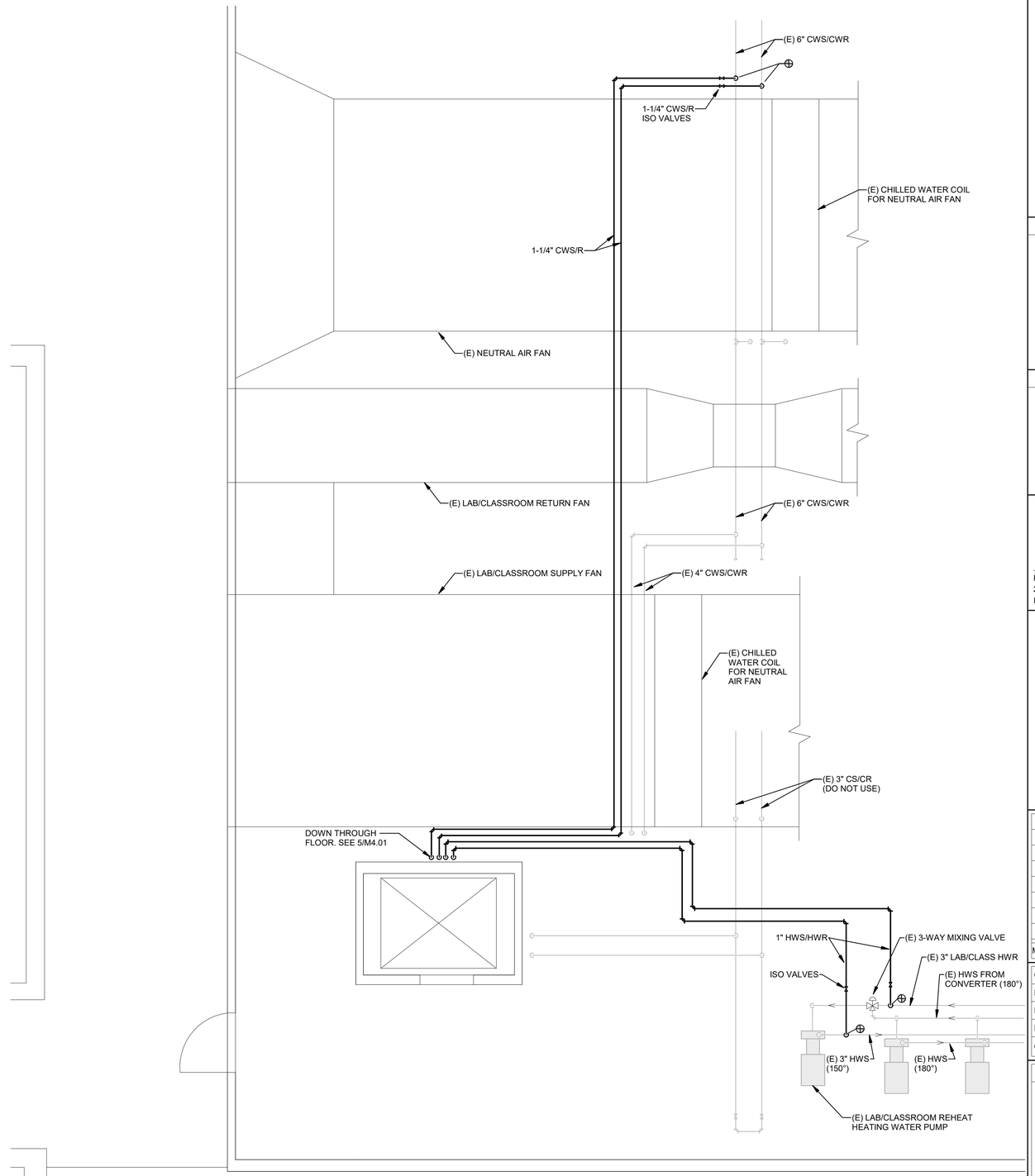

2 PENTHOUSE - PIPING
SCALE: 1/4" = 1'-0"

DESIGN FIRM:

MSI ENGINEERS
www.msi-engineers.com

CONSULTANTS:

PROVISIONAL STAMP:

AARON S. DONNELLY
STATE OF WASHINGTON
43373
REGISTERED
PROFESSIONAL ENGINEER

WASHINGTON STATE UNIVERSITY

Facilities Services
2425 E. Grimes Way
Pullman, Wa. 99164-1150
PH 509-335-5571
FAX 509-335-9304

WEGNER HALL

RM 310, 320B AND 320BA HVAC UPGRADE

0045

MARK	DATE	DESCRIPTION
	10/25/22	REVISED BID SET

CAD DWG FILE:
DESIGNED BY: ASD
DRAWN BY: RD | CHECKED BY: ASD
PROJECT No. 1654-2022 | FILE No: TBD

COPYRIGHT: WASHINGTON STATE UNIVERSITY

SHEET TITLE

PENTHOUSE
MECHANICAL

M3.02

SHEET 7 OF 11 SHEETS

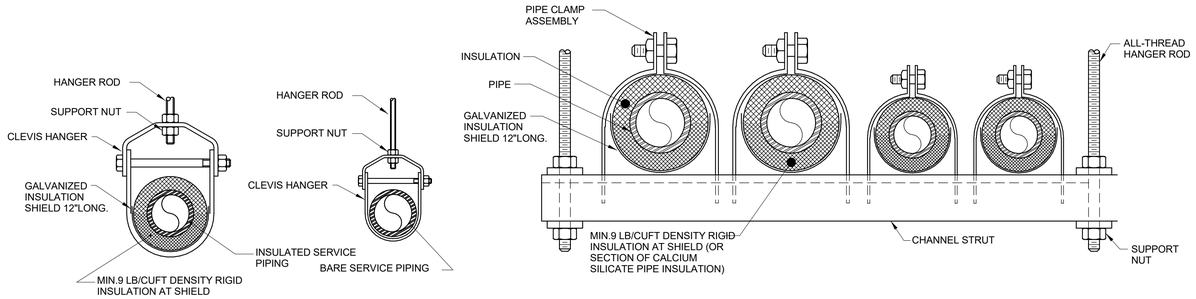

NOTES:

1. SEE SPECIFICATION FOR HANGER SIZES.
2. PIPE 8" AND LARGER SHALL HAVE ROLLER SUPPORTS.
3. FOR CHW SERVICE PROVIDE CONTINUOUS VAPOR BARRIER ON INSULATION JACKET THROUGH HANGER ASSEMBLY.

6 TYPICAL PIPE SUPPORT DETAILS

Scale: NOT TO SCALE

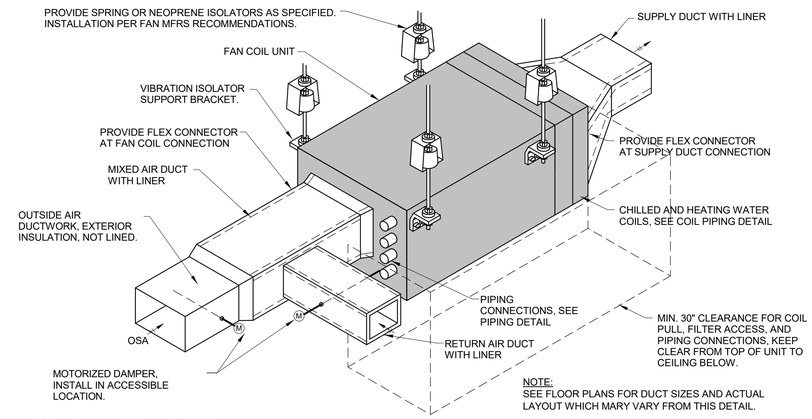

NOTE:
SEE FLOOR PLANS FOR DUCT SIZES AND ACTUAL LAYOUT WHICH MARY VARY FROM THIS DETAIL.

1 FAN COIL DETAIL

Scale: NOT TO SCALE

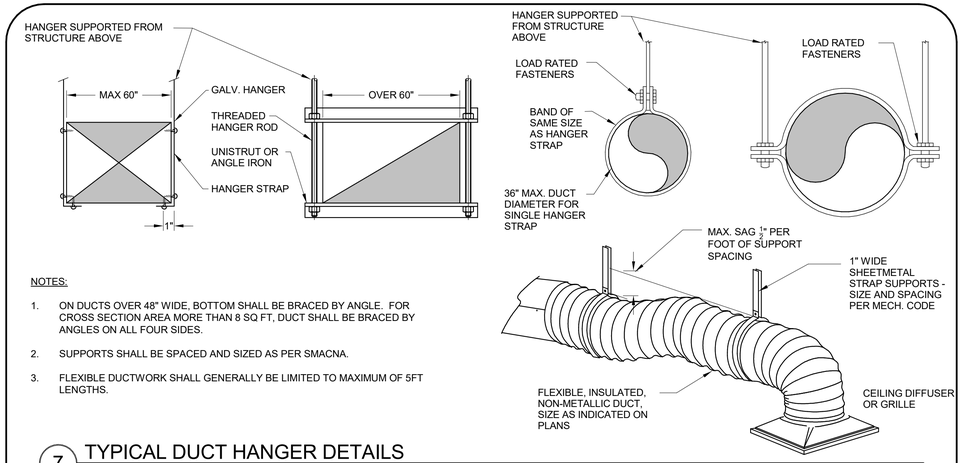

NOTES:

1. ON DUCTS OVER 48" WIDE, BOTTOM SHALL BE BRACED BY ANGLE. FOR CROSS SECTION AREA MORE THAN 8 SQ FT, DUCT SHALL BE BRACED BY ANGLES ON ALL FOUR SIDES.
2. SUPPORTS SHALL BE SPACED AND SIZED AS PER SMACNA.
3. FLEXIBLE DUCTWORK SHALL GENERALLY BE LIMITED TO MAXIMUM OF 5FT LENGTHS.

7 TYPICAL DUCT HANGER DETAILS

Scale: NOT TO SCALE

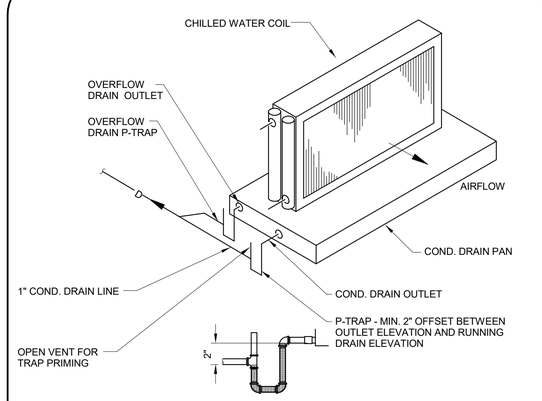

4 FAN COIL CONDENSATE DRAIN

Scale: NOT TO SCALE

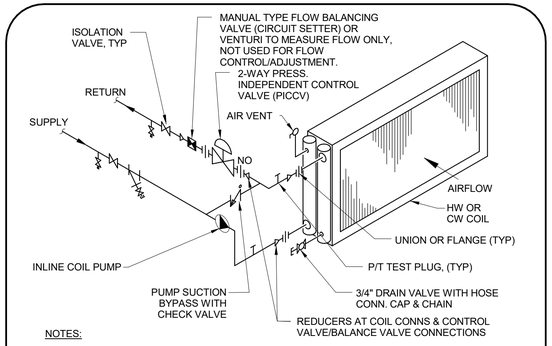

NOTES:

1. PIPE COIL FOR COUNTER-FLOW ARRANGEMENT.
2. ARRANGE PIPING ADJACENT TO UNIT TO MAINTAIN SERVICE ACCESS TO COMPONENTS.
3. ALL NEAR-COIL PIPING SHALL BE RUN FULL SIZE (BRANCH PIPE RUN-OUT SIZE), EXCEPT FOR CONTROL VALVE/BALANCE VALVE CONNECTIONS.
4. CONTROL VALVE PIPED WITH N.O. FLOW THRU COIL (FAIL FREEZE PROTECTION)

2 COIL PIPING DETAIL (CHILLED & HTG WATER)

Scale: NOT TO SCALE

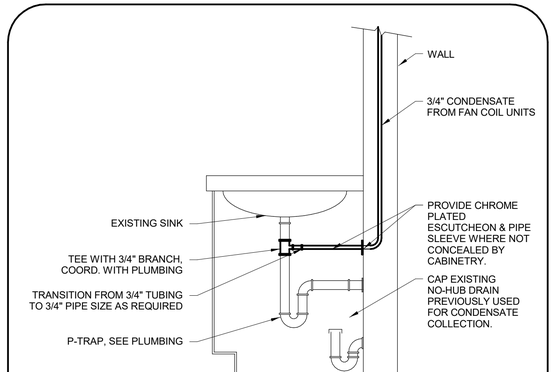

8 CONDENSATE DRAIN TO SINK TRAP

Scale: NOT TO SCALE

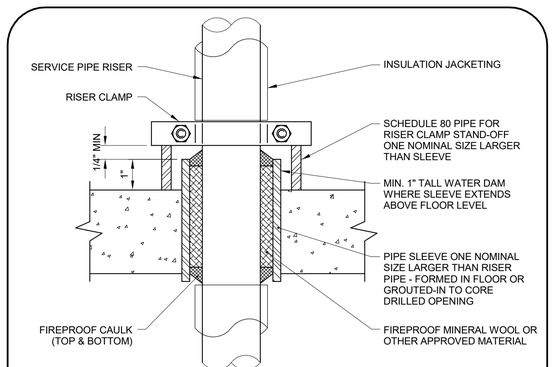

5 MECH ROOM FLOOR PENETRATION DETAIL

Scale: NOT TO SCALE

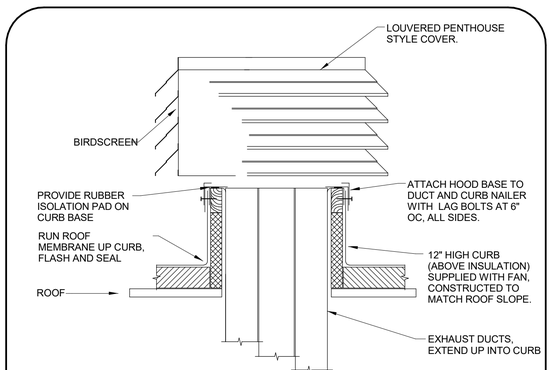

3 GRAVITY VENTILATOR DETAIL

Scale: NOT TO SCALE

DESIGN FIRM:

MSI ENGINEERS
www.msi-engineers.com

CONSULTANTS:

PROVISIONAL STAMP:

AARON S. DONNELLY
STATE OF WASHINGTON
43373
REGISTERED PROFESSIONAL ENGINEER

WASHINGTON STATE UNIVERSITY

Facilities Services
2425 E. Grimes Way
Pullman, Wa. 99164-1150
PH 509-335-5571
FAX 509-335-9304

WEGNER HALL

RM 310, 320B AND 320BA HVAC UPGRADE

0045

MARK	DATE	DESCRIPTION
	10/25/22	REVISED BID SET

CAD DWG FILE:
DESIGNED BY: ASD
DRAWN BY: RD CHECKED BY: ASD
PROJECT No. 1654-2022 FILE No: TBD
COPYRIGHT: WASHINGTON STATE UNIVERSITY

SHEET TITLE

MECHANICAL DETAILS

M4.01

SHEET 8 OF 11 SHEETS

COTNROL DAMPER
CONTROL VALVE
MOTOR STARTER
MOTOR STARTER W/ CT
TEMPERATURE SENSOR / THERMOSTAT
THERMOSTAT WITH CO2
THERMOSTAT WITH HUMIDITY
OUTDOOR TEMPERATURE SENSOR
PRESSURE SENSOR
AIRFLOW PROVING SWITCH
CARBON DIOXIDE SENSOR
CARBON MONOXIDE SENSOR
FLOW METER
DPS DIFFERENTIAL PRESSURE SENSOR
AMS AIRFLOW MEASURING STATION
VFD VARIABLE FREQUENCY DRIVE
ECM ELECTRONICALLY COMMUTATED MOTOR
SD SMOKE DETECTOR

ADJ ADJUSTABLE
AI ANALOG INPUT
AO ANALOG OUTPUT
BAS BUILIDING AUTOMATION SYSTEM
C COMMON
CIRC CIRCULATION
CWR CHILLED WATER RETURN
CWS CHILLED WATER SUPPLY
DDC DIRECT DIGITAL CONTROL
DI DIGITAL INPUT
DO DIGITAL OUTPUT
EA EXHAUST AIR
EMCS ENERGY MANAGEMENT & CONTROL SYSTEM
EXH EXHAUST
FACP FIRE ALARM CONTROL PANEL
HWR HOT WATER RETURN
HWS WATER SUPPLY
HX HEAT EXCHANGER
NC NORMALLY CLOSED
NO NORMALLY OPEN
OSA OUTSIDE AIR
RA RETURN AIR
SA SUPPLY AIR

2 CONTROL SYMBOLS AND LEGEND

Scale:

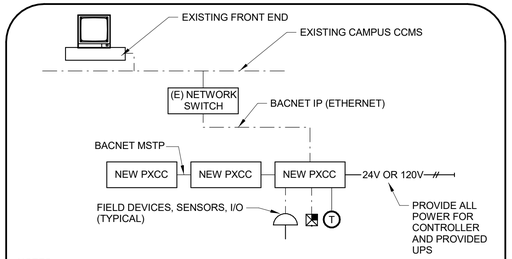

NOTES:
1. THIS DIAGRAM IS TO ILLUSTRATE THE BASIC ARCHITECTURE OF THE EXISTING SIEMENS BUILDING AUTOMATION AND CONTROL SYSTEM. THE CONTROL CONTRACTOR IS RESPONSIBLE FOR INTEGRATING ANY NEW CONTROLS WITH THIS EXISTING SYSTEM IN ACCORDANCE WITH THE OWNERS STANDARDS.
2. CONTROL DIAGRAMS INDICATE A DDC CONTROLLER BUT DO NOT ATTEMPT TO INDICATE THE QUANTITY, MODEL, OR ACCESSORY MODULES REQUIRED FOR THE PROJECT AS THIS IS THE RESPONSIBILITY OF THE CONTROL CONTRACTOR TO DETERMINE THE MOST EFFICIENT CONFIGURATION IN ACCORDANCE WITH THE OWNER'S STANDARDS.
3. COORDINATE OCCUPIED/UNOCCUPIED SCHEDULES, THERMOSTAT AND ALARM REQUIREMENTS, RANGES AND SETPOINTS WITH OWNER.
4. COORDINATE LOCATION OF CONTROLLER ENCLOSURES, PANELS, AND OPERATOR INTERFACE DEVICES WITH DIV 26, THE OWNER AND THE ENGINEER.

1 DDC CONTROL SYSTEM ARCHITECTURE

Scale: NOT TO SCALE

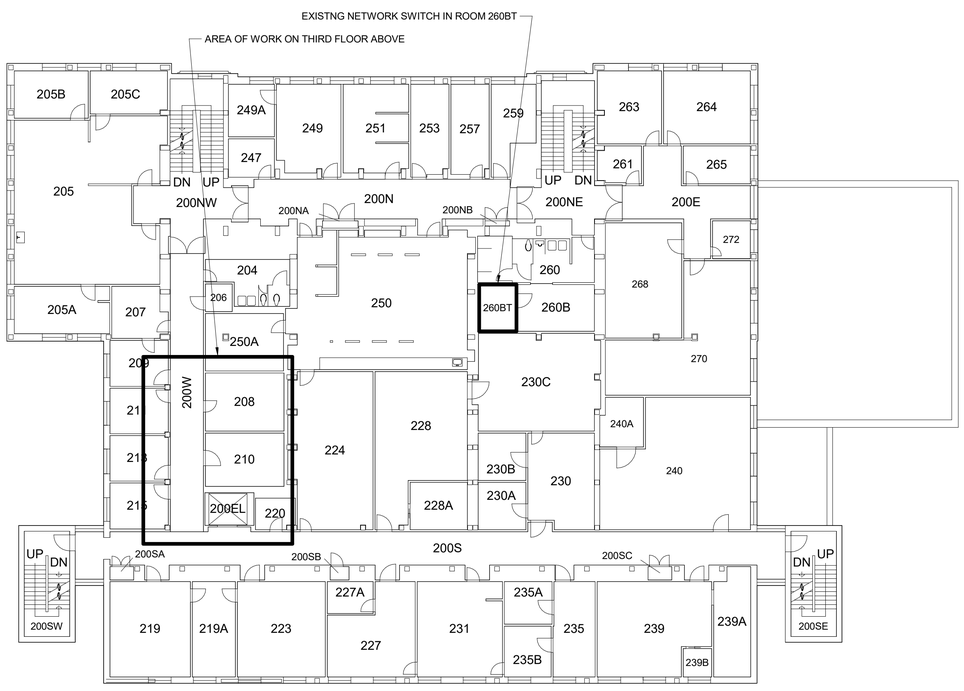

4 2ND FLOOR NETWORK SWITCH LOCATION

Scale: NOT TO SCALE

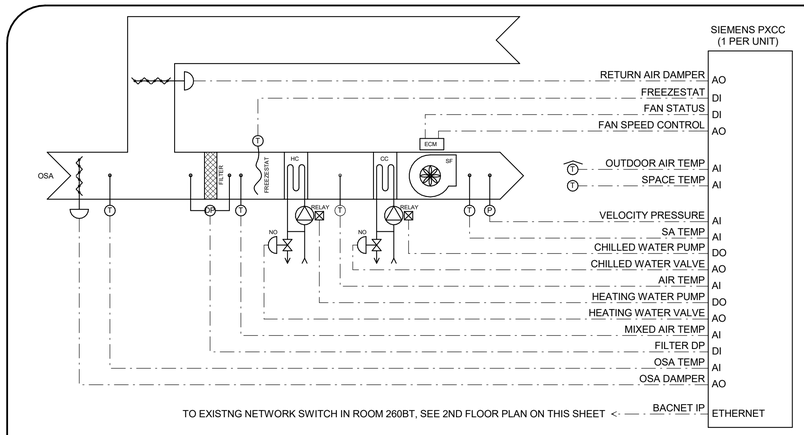

SEQUENCES OF OPERATIONS
THE CCMS SHALL CONTROL OCCUPIED AND UNOCCUPIED STATES BASED ON A TIME SCHEDULE COORDINATED WITH THE OWNER/OCCUPANT. THE INITIAL PROGRAMMING SHALL BE FOR 24/7 OCCUPANCY.

UNOCCUPIED (IF USED):
SUPPLY FAN SHALL BE DISABLED, OUTSIDE AIR DAMPER CLOSED, AND ROOM SETPOINT SETBACK TO 80° COOLING, 65° HEATING. UPON A CALL FOR HEATING OR COOLING, THE FAN SHALL CYCLE ON AT THE MINIMUM SPEED (DETERMINED DURING TAB TO PROVIDE THE MINIMUM CFM). THE HEATING OR CHILLED WATER VALVES SHALL MODULATE TO MAINTAIN SETBACK SETPOINTS. OUTSIDE AIR DAMPER SHALL REMAIN CLOSED.

OCCUPIED:
THE SUPPLY FAN SPEED WILL VARY TO ACHIEVE THE SCHEDULED HEATING AND COOLING CFMS. TAB AND CONTROL CONTRACTORS SHALL COORDINATE AND UTILIZE THE VELOCITY PRESSURE SENSOR TO DETERMINE FAN SPEEDS THAT CORRESPOND TO THESE CFMS.

IN OCCUPIED MODE THE SUPPLY FAN SHALL BE ENABLED AT LOW SPEED / HEATING CFM AND DAMPERS POSITION FOR MINIMUM VENTILATION (SEE OUTDOOR AIR, ECONOMIZER AND MIXED AIR CONTROL SEQUENCE BELOW). ON A CALL FOR HEAT (70° SETPOINT, ADJ) THE HEATING WATER PUMP SHALL BE ENABLED AND VALVE SHALL MODULATE TO MAINTAIN SPACE TEMP. ON A CALL FOR COOLING (75 DEG SETPOINT, ADJ) THE CHILLED WATER PUMP SHALL BE ENABLED AND VALVE SHALL MODULATE TO MAINTAIN SPACE TEMP. ON A CONTINUED CALL FOR COOLING WHEN THE VALVE IS 100% OPEN, THE SUPPLY FAN SPEED SHALL MODULATE BETWEEN THE SCHEDULED HEATING AND COOLING CFMS TO MAINTAIN ROOM SETPOINT. WHEN ECONOMIZER COOLING IS AVAILABLE (OUTDOOR AIR TEMP IS LESS THAN ROOM TEMP) THE CHILLED WATER PUMP AND VALVE SHALL BE LOCKED OUT AND THE FAN SPEED SHALL MODULATE BETWEEN THE SCHEDULED HEATING AND COOLING CFMS TO MAINTAIN ROOM SETPOINT.

MIXED AIR CONTROL:
OUTSIDE AIR AND RETURN AIR DAMPERS SHALL MODULATE TO MAINTAIN A CONSTANT OUTDOOR AIR PERCENTAGE BY RESETTING THE MIXED AIR TEMP SET POINT ACCORDING TO THE EQUATION MAT.SP=(OA% x OAT) + (RA% x RAT) WHERE THE OA% IS PER THE EQUIPMENT SCHEDULES AND RA% IS THE REMAINING. OAT AND RAT ARE MEASURED VALUES. ON A CALL FOR ECONOMIZER COOLING THE DAMPERS SHALL BE ALLOWED TO MODULATE BEYOND MINIMUM OSA POSITION FOR ECONOMIZER COOLING. DAMPERS MODULATION SHALL LIMIT THE MIXED AIR TEMPERATURE TO NO LESS THAN 55°F DB. A MIXED AIR TEMP OF LESS THAN 45 DEGREES SHALL GENERATOR AN ALARM, CLOSE THE OUTSIDE AIR DAMPER, OPEN THE RETURN DAMPER, ENABLE THE HEATING WATER PUMP AND OPEN THE HEATING VALVE.

FAN ALARM
IF THE FAN STATUS INDICATES THE FAN IS OFF BUT COMMANDED ON AN ALARM SHALL BE GENERATED, OUTSIDE AIR DAMPER CLOSED AND RETURN DAMPER OPENED.

FREEZE PROTECTION:
A FACTORY MOUNTED FREEZE STAT SHALL DISABLE THE FAN, OPEN THE HEATING WATER VALVE AND ENABLE THE HEATING WATER PUMP WHEN TRIPPED.

3 FAN COIL CONTROL SCHEMATIC

Scale: NOT TO SCALE

DESIGN FIRM:

MSI ENGINEERS
www.msi-engineers.com

CONSULTANTS:

PROVISIONAL STAMP:

AARON S. DONNELLY
STATE OF WASHINGTON
43373
PROFESSIONAL ENGINEER
REGISTERED

WASHINGTON STATE UNIVERSITY

Facilities Services
2425 E. Grimes Way
Pullman, Wa. 99164-1150
PH 509-335-5571
FAX 509-335-9304

WEGNER HALL

RM 310, 320B AND 320BA HVAC UPGRADE

0045

MARK	DATE	DESCRIPTION
	10/25/22	REVISED BID SET

CAD DWG FILE:
DESIGNED BY: ASD
DRAWN BY: RD
CHECKED BY: ASD
PROJECT No. 1654-2022
FILE No: TBD

COPYRIGHT: WASHINGTON STATE UNIVERSITY

SHEET TITLE

CONTROL DIAGRAMS

M4.02

SHEET 9 OF 11 SHEETS

ELECTRICAL LEGEND (LEGEND IS GENERAL IN NATURE. NOT ALL OF THE SYMBOLS SHOWN ARE USED IN THIS PROJECT.)

GENERAL NOTES

(RE: ALL ELECTRICAL SHEETS)

1. ALL ELECTRICAL EQUIPMENT AND SYSTEMS SHALL BE INSTALLED IN ACCORDANCE WITH THE NATIONAL ELECTRICAL CODE, INTERNATIONAL FIRE CODE, AND ALL OTHER STATE AND LOCAL CODES. CONTRACTOR SHALL IMMEDIATELY NOTIFY ENGINEER IN WRITING IF PORTIONS OF THE DESIGN SET OR FIELD CONDITIONS DO NOT MEET REQUIRED CODES.

2. PROVIDE FIRESTOPPING FOR ALL FLOOR AND FIREWALL PENETRATIONS FROM ELECTRICAL DEVICE, RACEWAY, AND CABLE PENETRATIONS. SEE ARCHITECTURAL DRAWINGS FOR FIREWALL LOCATIONS.

3. ALL WIRING DEVICES SHALL BE OF THE SAME MANUFACTURER AND SHALL MATCH THROUGHOUT. COVER PLATES SHALL BE STAINLESS AND DEVICES SHALL BE WHITE.

4. EMERGENCY LIGHTING SYMBOLS ARE SHADED ON THE LIGHTING PLANS. EMERGENCY SOURCE SHALL BE BATTERY BACKED BALLAST WITH MINIMUM OF 1400 LUMEN OUTPUT FOR A 90 MINUTE PERIOD, UNLESS NOTED OTHERWISE. PROVIDE UNSWITCHED CONDUCTORS FOR CHARGING CIRCUIT AS REQUIRED.

5. ALL WIRING DEVICES SHALL BE OF THE SAME MANUFACTURER AND SHALL MATCH THROUGHOUT. COVER PLATES SHALL BE STAINLESS AND DEVICES SHALL BE WHITE.

6. DESIGN OF ELECTRICAL REQUIREMENTS IS BASED ON MECHANICAL EQUIPMENT SPECIFIED. ELECTRICAL CONTRACTOR SHALL COORDINATE WITH MECHANICAL CONTRACTOR IF EQUIPMENT PURCHASED IS DIFFERENT FROM THAT SPECIFIED STILL MEETS DESIGN INTENT, INCLUDING BUT NOT LIMITED TO OVER-CURRENT PROTECTION, LOCAL DISCONNECTING MEANS, AND WIRE SIZING.

7. IT SHALL BE CONTRACTOR'S RESPONSIBILITY TO VERIFY TYPE OF CEILING SYSTEMS AND TO FURNISH APPROVED LIGHTING FIXTURES OF THE TYPE REQUIRED FOR MOUNTING IN SUBJECT CEILING. WHERE FIXTURES ARE RECESSED IN PLASTER OR DRYWALL CEILINGS, THEY SHALL BE COMPLETE WITH NECESSARY MOUNTING HARDWARE AND PLASTER FRAMES.

8. ALL RECESSED LIGHTING FIXTURES, SPEAKERS, RECEPTACLES, SWITCHES, ETC., MOUNTED IN THE FIRE RATED CEILINGS OR WALLS SHALL BE ENCLOSED WITH AN APPROVED ENCLOSURE CARRYING THE SAME FIRE RATING AS THE CEILING OR WALL BY THIS CONTRACTOR.

9. ALL COMMUNICATION CONDUIT SHALL BE 3/4" UNO.

10. COLOR CODE WIRES AS FOLLOWS:

CONDUCTORS	120/208V	277/480V
PHASE A	BLACK	BROWN
PHASE B	RED	ORANGE
PHASE C	BLUE	YELLOW
NEUTRAL	WHITE	WHITE OR GRAY
GROUND	GREEN	GREEN

11. ALL SWITCHES TO BE 20 AMP 277 VOLT SPECIFICATION GRADE.

12. ALL WIRE SHALL BE STRANDED TYPE THHN/THWN, MINIMUM SIZE #12 UNLESS OTHERWISE INDICATED.

13. CONTRACTOR SHALL PROVIDE #10 AWG CONDUCTORS FOR ALL CIRCUITS OF 100' OR MORE UNLESS SHOWN LARGER.

14. ALL HOMERUN JUNCTION BOXES SHALL BE A MINIMUM OF 4" SQUARE, 2-1/8" DEEP.

15. FURNISH AND INSTALL A COMPLETE ELECTRICAL SYSTEM AS DEPICTED FROM THE PLANS AND SPECIFICATIONS. COMPLETE AS NOTED OR IMPLIED, NOT LIMITED TO WHAT IS SHOWN.

16. ALL DRAWINGS ARE SCHEMATIC IN NATURE AND ALL APPURTENANCES NOT INDICATED TO MAKE A WORKING SYSTEM MUST BE INCLUDED IN THE CONTRACTOR'S BID.

17. IF THERE APPEARS TO BE ANY ITEMS IN CONFLICT WITH THE DRAWINGS, INCONSISTENCIES WITH DESIGN OR INTENT, OR NEED FOR CLARIFICATION, IT IS THE CONTRACTOR'S RESPONSIBILITY TO CLARIFY THESE ITEMS PRIOR TO BID IN WRITING WITH THE ENGINEER. IF THE CONTRACTOR FAILS TO CLARIFY ANY QUESTIONS OR INCONSISTENCY, HE ACCEPTS RESPONSIBILITY TO CORRECT AT HIS COST ANY SUCH ITEM TO MEET INTENT AS DEFINED BY THE ENGINEER.

18. ALL MOUNTING HEIGHTS OF EQUIPMENT SHALL MEET ADA REQUIREMENTS UNLESS OTHERWISE NOTED.

19. ALL CONDUIT IN WALLS TO BE RUN VERTICAL, MINIMUM SIZE 3/4".

20. COORDINATE ALL DEVICE/FIXTURE LOCATIONS AND SPECIFIC REQUIREMENTS WITH OWNER/ARCHITECT PRIOR TO ROUGH-IN.

21. SEE MECHANICAL PLANS FOR EXACT LOCATION OF ALL MECHANICAL EQUIPMENT.

22. ALL CONDUIT RUNS USING PVC CONDUIT SHALL USE RGD OR IMC FOR ANY BEND OVER 45 DEGREES AND ALL 90 DEGREE ELBOWS.

23. UNDERGROUND CONDUITS SHALL BE SCHEDULE 40 PVC. MINIMUM OF 1" CONDUIT THROUGHOUT UNDERGROUND SYSTEM UNLESS OTHERWISE INDICATED.

24. ALL CONDUIT PENETRATING SLAB IN EXPOSED LOCATIONS SHALL BE RIGID STEEL.

25. EACH TRADE SUB-CONTRACTOR IS RESPONSIBLE FOR SUSPENDED SUPPORTS NOT SHOWN ON STRUCTURAL DRAWINGS. ALL SUB-CONTRACTORS SHALL COORDINATE WITH EACH-OTHER FOR ELEVATION PRIORITY PLACEMENT OF GRADED PIPES, LARGE DUCTWORK, EQUIPMENT, CONDUIT, FIRE PROTECTION, AND LIGHTING.

26. OVER-CURRENT PROTECTION FOR THE HVAC EQUIPMENT SHALL BE PER THE MANUFACTURER'S NAMEPLATE, FUSE, OR HACR TYPE BREAKER.

27. LABEL ALL RECEPTACLE FACE PLATES WITH PANEL AND CIRCUIT NUMBER.

ABBREVIATIONS

(E)	EXISTING
(D)	DEMOLISH
(R)	RELOCATED
(RE)	REPLACED
A	AMPERES
AC	ABOVE COUNTER
AF	AMPERE FRAME
AFC	AVAILABLE FAULT CURRENT
AFF	ABOVE FINISHED FLOOR
AFG	ABOVE FINISHED GRADE
AHJ	AUTHORITY HAVING JURISDICTION
AT	AMP TRIP
AWG	AMERICAN WIRE GAUGE
BMS	BUILDING MANAGEMENT SYSTEM
C	CONDUIT
CB	CIRCUIT BREAKER
CKT	CIRCUIT
CL	CRITICAL LOAD
CM	CEILING MOUNTED
CO	CONDUIT ONLY, PROVIDE PULL-LINE
D	MECHANICAL DUCT-MOUNTED DEVICE
DC	DIRECT CURRENT
DET	DETAIL
E	EMERGENCY/CRITICAL CARE
EF	EXHAUST FAN
EL	EMERGENCY LIGHT
EWC	ELECTRIC WATER COOLER
EWH	ELECTRIC WATER HEATER
F	FUSE
FACP	FIRE ALARM CONTROL PANEL
FVNR	FULL VOLTAGE NON-REVERSING
G/GND	GROUND
GFI	GROUND FAULT INTERRUPTION
GFCI	GROUND FAULT CIRCUIT INTERRUPTION
GFP	GROUND FAULT PROTECTION
H	HEAT
HH	HANDHOLE
HID	HIGH INTENSITY DISCHARGE
HOA	HAND OFF AUTO
HP	HORSE POWER
HVAC	HEATING, VENTILATING, & AIR CONDITIONING
I	IONIZATION
IC	INTERRUPTING CAPACITY
ID	IN-DUCT/INTER-DUCT
IG	ISOLATED GROUND
J/JB	JUNCTION BOX
KW	KILOWATT
KWH	KILOWATT HOUR
M	MAGNETIC CONTACTOR COIL
MAU	MAKEUP AIR UNIT
MB	MAIN BREAKER
MCC	MOTOR CONTROL CENTER
MH	MANHOLE
MLO	MAIN LUGS ONLY
MS	MOTOR STARTER
MW	MICROWAVE
N	NEUTRAL
NC	NORMALLY CLOSED
NCL	NON CRITICAL LOAD
NEC	NATIONAL ELECTRICAL CODE
NIC	NOT IN CONTRACT
NO	NORMALLY OPEN
NTS	NOT TO SCALE
OFCI	OWNER FURNISHED CONTRACTOR INSTALLED
OL	OVERLOAD
OS	OCCUPANCY SENSOR
P	PHOTO
PC	PHOTOCELL
PVC	POLYVINYL CHLORIDE
RCP	REFLECTIVE CEILING PLAN
RCPT	RECEPTACLE
REF	REFRIGERATOR
RIB	RELAY IN A BOX
SPST	SINGLE POLE SINGLE THROW
TC	TIME CLOCK
TDR	TIME DELAY RELAY
TJB	TERMINAL JUNCTION BOX
TP	TWISTED PAIR
TT	TWISTED TRIAD
TSP	TWISTED SHIELDED PAIR
TST	TWISTED SHIELDED TRIAD
TTB	TELEPHONE TERMINAL BOARD
TVSS	TRANSIENT VOLTAGE SURGE SUPPRESSER
TYP	TYPICAL
UH	UNIT HEATER
UNO	UNLESS NOTED OTHERWISE
V	VOLT
VA	VOLT AMPERE
WG	PROVIDE PROTECTIVE WIRE GUARD
WIU	WHILE IN USE
WP	WEATHER PROOF/NEMA 3R
XFMR	TRANSFORMER

CIRCUITING SYMBOLS

CONDUIT STUBBED, CAPPED, AND MARKED WITH PULL CORD.

CONDUIT UP.

CONDUIT DOWN.

CIRCUIT CONCEALED IN CEILING OR WALL.

CIRCUIT CONCEALED IN FLOOR OR UNDERGROUND.

HOMERUN. PANEL AND CIRCUIT AS INDICATED.

RACEWAY SIZE — 3/4"C
CONDUCTOR QUANTITY — 2#12, 1#12G
CONDUCTOR SIZE — P-1
PANEL & CIRCUIT
GROUNDING CONDUCTOR SIZE

CIRCUIT SHALL CONSIST OF 3/4"-2#12, 1#12G UNLESS NOTED OTHERWISE.

CONTRACTOR SHALL ROUTE CIRCUIT HOMERUN FROM DEVICE NEAREST THE PANEL.

MISC. SYMBOLS

JUNCTION BOX.

JUNCTION BOX, WALL MOUNTED.

THERMOSTAT. +56" AFF UNO. UNIT CONTROLLED INDICATED.

SURFACE MOUNTED PANELBOARD/ENCLOSURE.SEE SCHEDULE FOR TYPE.

FLUSH MOUNTED PANELBOARD/ENCLOSURE. SEE SCHEDULE FOR TYPE.

TAG — MECHANICAL EQUIPMENT SYMBOL (RE: MECHANICAL DRAWINGS FOR EXACT LOCATION OF UNITS).

XX## — INDICATES FIXTURE TYPE. REFER TO LUMINAIRE SCHEDULE.

ADA DOOR CHIME/STROBE

SINGLE BUTTON, WALL MOUNTED PUSHBUTTON. MOUNT AT SWITCH HEIGHT UNO.

THREE BUTTON, WALL MOUNTED PUSHBUTTON MOUNT AT SWITCH HEIGHT UNO.

TV — TELEVISION OUTLET. PROVIDE NEMA 5-20R OUTLET AND 3/4"C STUB TO ACCESSIBLE SPACE.

TELEPHONE TERMINAL BOARD 'TTB'.

X — DETAIL
XXXX — SHEET

— KEYNOTE

SWITCHES

SXX SWITCH. TYPE AS INDICATED. +46"AFF, UNO.

2	DOUBLE POLE
3	3-WAY
4	4-WAY
D	DIMMER. LUTRON DVSTV
F	CEILING FAN CONTROLLER
HP	HORSE POWER RATED
K	KEYED
LV	LOW VOLTAGE
M	MOMENTARY CONTACT
MM	MANUAL MOTOR STARTER
OS	OCCUPANCY SENSOR
P	PILOT LIGHT
T	15 MINUTE TIMER
TO	THERMAL OVERLOAD
V	VOLUME CONTROL
VS	VACANCY SENSOR
a	SUPERSCRIPT INDICATES LIGHTS TO BE SWITCHED TOGETHER

POWER SYMBOLS

SIMPLEX 20A RECESSED RECEPTACLE. +18" AFF UNO

SIMPLEX 20A RECESSED RECEPTACLE. MOUNT ABOVE COUNTER UNO.

DUPLEX NEMA 5-20A OUTLET. +18" AFF UNO.

DUPLEX NEMA 5-20A OUTLET. MOUNT ABOVE COUNTER UNO.

DUPLEX NEMA 5-20A OUTLET WITH GROUND FAULT INTERRUPTION PROTECTION. +18" AFF UNO.

DUPLEX NEMA 5-20A OUTLET WITH GROUND FAULT INTERRUPTION PROTECTION. MOUNTED ABOVE COUNTER UNO

SWITCHED NEMA 5-20A DUPLEX OUTLET. +18" AFF UNO.

SWITCHED NEMA 5-20A DUPLEX OUTLET. MOUNTED ABOVE COUNTER UNO.

DUPLEX NEMA 5-20A OUTLET WITH INTEGRAL USB CHARGING. +18" AFF UNO.

DUPLEX NEMA 5-20A OUTLET WITH INTEGRAL USB CHARGING. MOUNTED ABOVE COUNTER UNO.

DUPLEX NEMA 5-20A ISOLATED GROUND OUTLET. +18" AFF UNO.

DUPLEX NEMA 5-20A ISOLATED GROUND OUTLET. MOUNTED ABOVE COUNTER UNO.

FOURPLEX NEMA 5-20A OUTLET. +18" AFF UNO.

FOURPLEX NEMA 5-20A OUTLET. MOUNTED ABOVE COUNTER UNO.

FOURPLEX NEMA 5-20A OUTLET WITH GROUND FAULT INTERRUPTION PROTECTION. +18" AFF UNO.

FOURPLEX NEMA 5-20A OUTLET WITH GROUND FAULT INTERRUPTION PROTECTION. MOUNTED ABOVE COUNTER UNO.

SWITCHED FOURPLEX NEMA 5-20A OUTLET. +18" AFF UNO.

SWITCHED FOURPLEX NEMA 5-20A OUTLET. MOUNTED ABOVE COUNTER UNO.

FOURPLEX NEMA 5-20A OUTLET WITH INTEGRAL USB CHARGING. +18" AFF UNO.

FOURPLEX NEMA 5-20A OUTLET WITH INTEGRAL USB CHARGING. MOUNTED ABOVE COUNTER UNO.

FOURPLEX NEMA 5-20A ISOLATED GROUND OUTLET .+18" AFF UNO.

FOURPLEX NEMA 5-20A ISOLATED GROUND OUTLET. MOUNTED ABOVE COUNTER UNO.

SPECIAL PURPOSE OUTLET. VERIFY SIZE AND TYPE WITH EQUIPMENT SUPPLIER.

CONNECTION POINT TO EQUIPMENT SPECIFIED, FURNISHED, AND INSTALLED UNDER OTHER SECTIONS. ELECTRICAL CONTRACTOR TO SUPPLY RACEWAY AND CONDUCTORS AND MAKE FINAL CONNECTION TO EQUIPMENT UNDER THIS SECTION, UNO.

DUPLEX NEMA 5-20A OUTLET. FLUSH FLOOR MOUNTED WITH BRASS COVER PLATE UNO.

FOURPLEX NEMA 5-20A OUTLET. FLUSH FLOOR MOUNTED WITH BRASS COVER PLATE UNO.

SPECIAL PURPOSE OUTLET. VERIFY SIZE AND TYPE WITH EQUIPMENT SUPPLIER. FLUSH FLOOR MOUNTED WITH BRASS COVER PLATE.

DUPLEX NEMA 5-20A OUTLET. CEILING MOUNTED UNO.

FOURPLEX NEMA 5-20A OUTLET. CEILING MOUTNED UNO.

MOTOR STARTER/CONTACTOR.

COMBINATION STARTER AND DISCONNECT.

X — NON-FUSED DISCONNECT SWITCH. SIZE AS INDICATED, NEMA 1 UNO, 3 POLE UNO.

X — F — FUSED DISCONNECT SWITCH. SIZE AS INDICATED, NEMA 1 UNO, 3 POLE UNO.

M — MOTOR CONNECTION. RE: MECHANICAL EQUIPMENT SCHEDULE

MOUNTING HEIGHT DETAIL

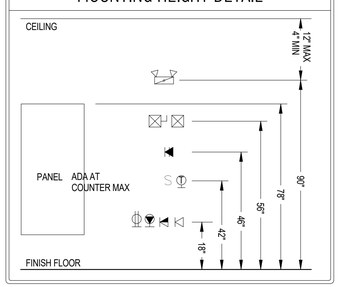

DESIGN FIRM:

MSI ENGINEERS
www.msi-engineers.com

CONSULTANTS:

PROVISIONAL STAMP:

BENJAMIN M. JENKINS — STATE OF WASHINGTON — 57465 — REGISTERED PROFESSIONAL ENGINEER

WASHINGTON STATE UNIVERSITY

Facilities Services
2425 E. Grimes Way
Pullman, Wa. 99164-1150
PH 509-335-5571
FAX 509-335-9304

WEGNER HALL

RM 310, 320B AND 320BA HVAC UPGRADE

0045

MARK	DATE	DESCRIPTION
	10/25/22	REVISED BID SET

CAD DWG FILE:
DESIGNED BY: BMJ
DRAWN BY: BMJ — CHECKED BY: BMJ
PROJECT No. 1654-2022 — FILE No: TBD
COPYRIGHT: WASHINGTON STATE UNIVERSITY

SHEET TITLE

LEGENDS, ABBREVIATIONS, GENERAL NOTES

E0.01

SHEET 10 OF 11 SHEETS

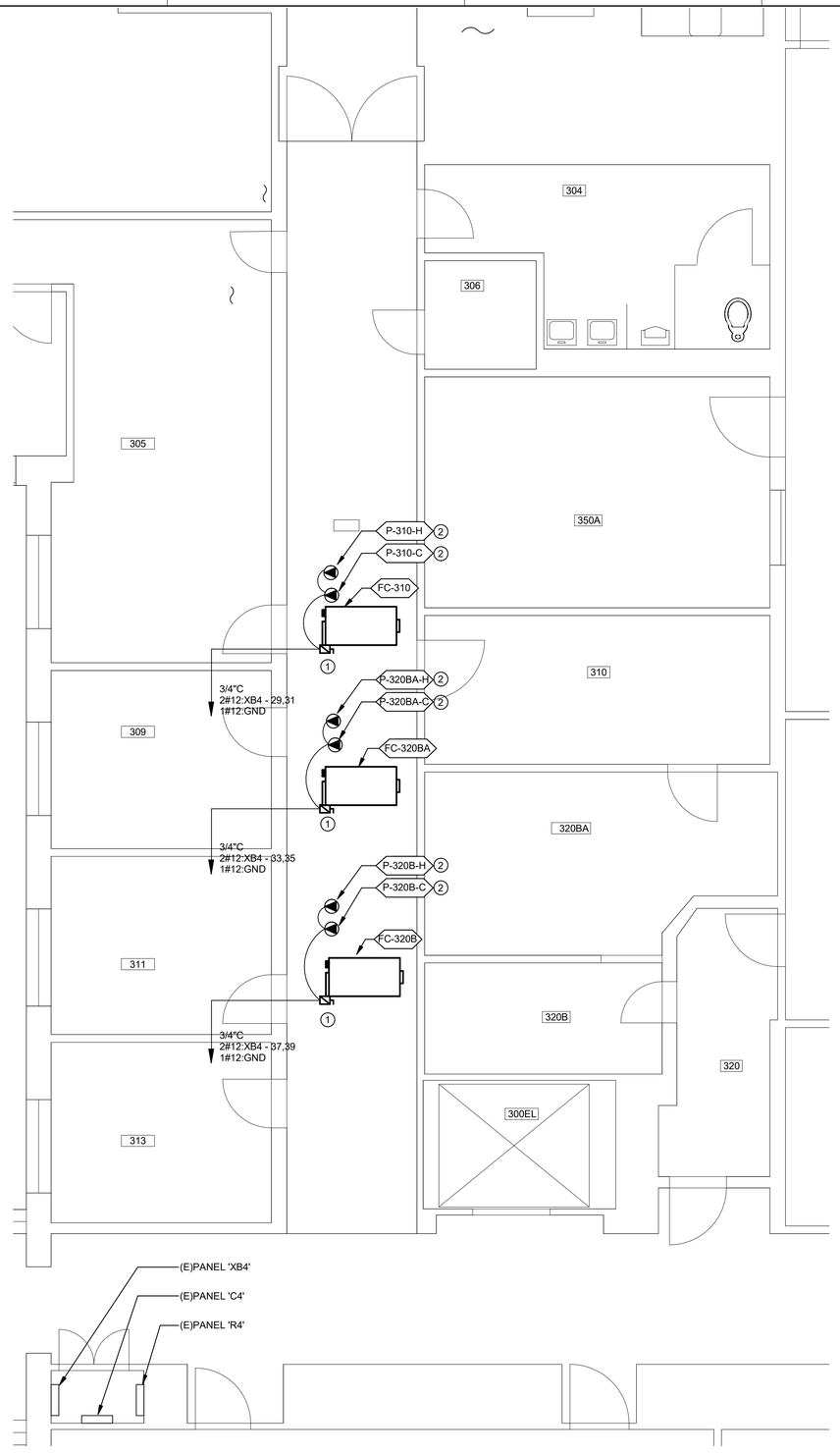

1 LEVEL 3 - POWER

SCALE: 1/4" = 1'-0"

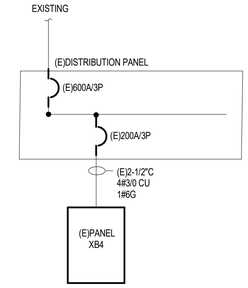

NOTE:

INSTALLATION IS EXISTING-TO-REMAIN; SHOWN FOR REFERENCE ONLY.

GENERAL NOTES

1. COORDINATE HVAC DEMOLITION WITH WITH MECHANICAL CONTRACTOR AND SHEETS M2.01 & M2.02.

KEY NOTES

1. PROVIDE NEMA 1/15/2 DISCONNECT.
2. VERIFY LOCATION OF RECIRC PUMP WITH MECHANICAL CONTRACTOR. ROUTE RECIRC PUMP CIRCUIT THROUGH START/STOP RELAY. PROVIDE LOCAL HORSEPOWER RATED 2-POLE SWITCH AT RECIRC PUMP. RE:M3.01 & M4.02-3

MSI ENGINEERS

(E)PANEL: XB4

VOLTAGE: 208/120V **PHASE:** 3 **WIRE:** 4 **MINIMUM AIC RATING:** EXISTING
AMPERE RATING: 225A **ENCLOSURE RATING:** **NEMA 1**

CKT NO	LOAD (VA)	LOAD SERVED	NOTE	LOAD TYPE	AMPS/ POLES		PHASE A	PHASE B	PHASE C	AMPS/ POLES		LOAD TYPE	NOTE	LOAD SERVED	LOAD (VA)	CKT NO
1		CORRIDOR LIGHTS	E	L	20	1	0			20	2	R	E	319, C/ REFER CENTRIFUGE		2
3		319, S REFER	E	R	20	1		0		*	*	*	E	319, C/ REFER CENTRIFUGE		4
5		310, N REFER	E	R	20	2			0	20	2	R	E	RM 319 208V REC		6
7		310, N REFER	E	*	*	*	0			*	*	*	E	RM 319 208V REC		8
9		325, S/ CONTROL PAN 320A	E	MC	20	1		0		20	1	R	E	RM 319 REC		10
11		325, S/ CONTROL PAN 320A	E	MC	20	1			0	20	1	R	E	RM 319 REC		12
13		CONTROL PAN 320A	E	MC	20	1	0			30	3	MC	E	PANEL 320CA		14
15		333, CONTROL PAN 320CA	E	MC	20	1		0		*	*	*	E	PANEL 320CA		16
17		CONTROL PAN 320CA	E	MC	20	1			0	*	*	*	E	PANEL 320CA		18
19		HOOD RM 310	E	R	20	1	0			20	1	R	E	324, W		20
21		REFER	E	MC	20	1		0		20	2	R	E	FREEZER		22
23		FREEZER REFER	E	MC	70	3			0	*	*	*	E	FREEZER		24
25		FREEZER REFER	E	MC	*	*	0							SPACE		26
27		FREEZER REFER	E	MC	*	*		0						SPACE		28
29		SPACE							0	20	3		E			30
31		SPACE					0			*	*		E			32
33		SPACE						0		*	*		E			34
35		SPACE							0					SPACE		36
37		SPACE					0							SPACE		38
39		SPACE						0						SPACE		40
41		SPACE							0					SPACE		42

CONNECTED LOADS:	Amps	VA
PHASE A:	0	0
PHASE B:	0	0
PHASE C:	0	0
TOTAL:		0

LOAD TYPES: L = LIGHTING; R = RECEPTACLES; MC = MISC; MT = MOTOR; K = KITCHEN; LARGEST MOTOR =; # OF KITCHEN =

LOADING BY TYPE	DEMAND FACTOR	DEMAND	NEC CODE
L	125%	0 VA	210-19
R	10kVA @ 100%, REM @ 50%	0 VA	220-44
MC	100%	0 VA	220-60
MO	100% + LARGEST x 25%	0 VA	220-50
K		0 VA	220-56
	TOTAL	0	0

MSI ENGINEERS

(E)PANEL: XB4

VOLTAGE: 208/120V **PHASE:** 3 **WIRE:** 4 **MINIMUM AIC RATING:** EXISTING
AMPERE RATING: 225A **ENCLOSURE RATING:** **NEMA 1**

CKT NO	LOAD (VA)	LOAD SERVED	NOTE	LOAD TYPE	AMPS/ POLES		PHASE A	PHASE B	PHASE C	AMPS/ POLES		LOAD TYPE	NOTE	LOAD SERVED	LOAD (VA)	CKT NO
1		CORRIDOR LIGHTS	E	L	20	1	0			20	2	R	E	319, C/ REFER CENTRIFUGE		2
3		319, S REFER	E	R	20	1		0		*	*	*	E	319, C/ REFER CENTRIFUGE		4
5		310, N REFER	E	R	20	2			0	20	2	R	E	RM 319 208V REC		6
7		310, N REFER	E	*	*	*	0			*	*	*	E	RM 319 208V REC		8
9		325, S/ CONTROL PAN 320A	E	MC	20	1		0		20	1	R	E	RM 319 REC		10
11		325, S/ CONTROL PAN 320A	E	MC	20	1			0	20	1	R	E	RM 319 REC		12
13		CONTROL PAN 320A	E	MC	20	1	0			30	3	MC	E	PANEL 320CA (OFF)		14
15		333, CONTROL PAN 320CA	E	MC	20	1		0		*	*	*	E	PANEL 320CA (OFF)		16
17		CONTROL PAN 320CA (OFF)	E	MC	20	1			0	*	*	*	E	PANEL 320CA (OFF)		18
19		HOOD RM 310	E	R	20	1	0			20	1	R	E	324, W		20
21		REFER (OFF)	E	MC	20	1		0		20	2	R	E	FREEZER		22
23		FREEZER REFER	E	MC	70	3			0	*	*	*	E	FREEZER		24
25		FREEZER REFER	E	MC	*	*	0							SPACE		26
27		FREEZER REFER	E	MC	*	*		0						SPACE		28
29	**462**	**FAN COIL FC-310, P-310-H, P-310-C**	**N**	**MT**	**15**	**2**			462	20	3		E			30
31	**462**	**FAN COIL FC-310, P-310-H, P-310-C**	**N**	**MT**	**	*	462			*	*		**E**			32
33	**462**	**FAN COIL FC-320BA, P-320BA-H, P-320BA-C**	**N**	**MT**	**15**	**2**		462		*	*		E			34
35	**462**	**FAN COIL FC-320BA, P-320BA-H, P-320BA-C**	**N**	**MT**	**	*			462					SPACE		36
37	**462**	**FAN COIL FC-320B, P-320B-H, P-320B-C**	**N**	**MT**	**15**	**2**	462							SPACE		38
39	**462**	**FAN COIL FC-320B, P-320B-H, P-320B-C**	**N**	**MT**	**	*		462						SPACE		40
41		SPACE							0					SPACE		42

CONNECTED LOADS:	Amps	VA
PHASE A:	8	924
PHASE B:	8	924
PHASE C:	8	924
TOTAL:		2772

LOAD TYPES: L = LIGHTING; R = RECEPTACLES; MC = MISC; MT = MOTOR; K = KITCHEN; LARGEST MOTOR = 864.0; # OF KITCHEN =

LOADING BY TYPE	DEMAND FACTOR	DEMAND	NEC CODE
L	125%	0 VA	210-19
R	10kVA @ 100%, REM @ 50%	0 VA	220-44
MC	100%	0 VA	220-60
MO	100% + LARGEST x 25%	2988 VA	220-50
K		0 VA	220-56
	TOTAL	2988	8

NOTES:
E - EXISTING LOAD TO REMAIN
N - NEW LOAD. PROVIDE NEW BREAKER AS INDICATED

DESIGN FIRM:

MSI ENGINEERS
www.msi-engineers.com

CONSULTANTS:

PROVISIONAL STAMP:

BENJAMIN M. JENNINGS
STATE OF WASHINGTON
57465
REGISTERED
PROFESSIONAL ENGINEER

WASHINGTON STATE UNIVERSITY

Facilities Services
2425 E. Grimes Way
Pullman, Wa. 99164-1150
PH 509-335-5571
FAX 509-335-9304

WEGNER HALL

RM 310, 320B AND 320BA HVAC UPGRADE

0045

MARK	DATE	DESCRIPTION
	10/25/22	REVISED BID SET

CAD DWG FILE:
DESIGNED BY: BMJ
DRAWN BY: BMJ CHECKED BY: BMJ
PROJECT No. 1654-2022 FILE No: TBD

COPYRIGHT: **WASHINGTON STATE UNIVERSITY**

SHEET TITLE

THIRD FLOOR POWER & DETAILS

E3.01

SHEET 11 OF 11 SHEETS