Model 450*i*

Instruction Manual
Pulsed Fluorescence SO_2-H_2S-CS Analyzer
Part Number 103258-00
16May2015

CE

Thermo
SCIENTIFIC

© 2007 Thermo Fisher Scientific Inc. All rights reserved.

Specifications, terms and pricing are subject to change. Not all products are available in all countries. Please consult your local sales representative for details.

Thermo Fisher Scientific
Air Quality Instruments
27 Forge Parkway
Franklin, MA 02038
1-508-520-0430
www.thermo.com/aqi

WEEE Compliance

This product is required to comply with the European Union's Waste Electrical & Electronic Equipment (WEEE) Directive 2002/96/EC. It is marked with the following symbol:

Thermo Fisher Scientific has contracted with one or more recycling/disposal companies in each EU Member State, and this product should be disposed of or recycled through them. Further information on Thermo Fisher Scientific's compliance with these Directives, the recyclers in your country, and information on Thermo Fisher Scientific products which may assist the detection of substances subject to the RoHS Directive are available at: www.thermo.com/WEEERoHS.

About This Manual

This manual provides information about installing, operating, maintaining, and servicing the Model 450*i*. It also contains important alerts to ensure safe operation and prevent equipment damage. The manual is organized into the following chapters and appendices to provide direct access to specific operation and service information.

- Chapter 1 “Introduction” provides an overview of the product features, describes the principle of operation, and lists the specifications.
- Chapter 2 “Installation” describes how to unpack, setup, and start-up the analyzer.
- Chapter 3 “Operation” describes the front panel display, the front panel pushbuttons, and the menu-driven software.
- Chapter 4 “Calibration” provides the procedures for calibrating the analyzer and describes the required equipment.
- Chapter 5 “Preventive Maintenance” provides maintenance procedures to ensure reliable and consistent instrument operation.
- Chapter 6 “Troubleshooting” presents guidelines for diagnosing analyzer failures, isolating faults, and includes recommended actions for restoring proper operation.
- Chapter 7 “Servicing” presents safety alerts for technicians working on the analyzer, step-by-step instructions for repairing and replacing components, and a replacement parts list. It also includes contact information for product support and technical information.
- Chapter 8 “System Description” describes the function and location of the system components, provides an overview of the software structure, and includes a description of the system electronics and input/output connections.
- Chapter 9 “Optional Equipment” describes the optional equipment that can be used with this analyzer.
- Appendix A “Warranty” is a copy of the warranty statement.
- Appendix B “C-Link Protocol Commands” provides a description of the C-Link protocol commands that can be used to remotely control an analyzer using a host device such as a PC or datalogger.

- Appendix C “MODBUS Protocol” provides a description of the MODBUS Protocol Interface and is supported both over RS-232/485 (RTU protocol) as well as TCP/IP over Ethernet.
- Appendix D “Geysitech (Bayern-Hessen) Protocol” provides a description of the Geysitech (Bayern-Hessen or BH) Protocol Interface and is supported both over RS-232/485 as well as TCP/IP over Ethernet.

Safety and Equipment Damage Alerts

This manual contains important information to alert you to potential safety hazards and risks of equipment damage. Refer to the following types of alerts you may see in this manual.

Safety and Equipment Damage Alert Descriptions

Alert		Description
	DANGER	A hazard is present that will result in death or serious personal injury if the warning is ignored. ▲
	WARNING	A hazard is present or an unsafe practice can result in serious personal injury if the warning is ignored. ▲
	CAUTION	The hazard or unsafe practice could result in minor to moderate personal injury if the warning is ignored. ▲
	Equipment Damage	The hazard or unsafe practice could result in property damage if the warning is ignored. ▲

Safety and Equipment Damage Alerts in this Manual

Alert		Description
	WARNING	If the equipment is operated in a manner not specified by the manufacturer, the protection provided by the equipment may be impaired. ▲ The service procedures in this manual are restricted to qualified service personnel only. ▲ The Model 450*i* is supplied with a three-wire grounding cord. Under no circumstances should this grounding system be defeated. ▲
	Equipment Damage	Do not attempt to lift the analyzer by the cover or other external fittings. ▲ Some internal components can be damaged by small amounts of static electricity. A properly ground antistatic wrist strap must be worn while handling any internal component. If an antistatic wrist strap is not available, be sure to touch the instrument chassis before touching any internal components. When the instrument is unplugged,

Alert	Description
	the chassis is not at earth ground. ▲
	This adjustment should only be performed by an instrument service technician. ▲
	Handle all printed circuit boards by the edges only. ▲
	Do not remove the panel or frame from the LCD module. ▲
	The LCD module polarizing plate is very fragile, handle it carefully. ▲
	Do not wipe the LCD module polarizing plate with a dry cloth, it may easily scratch the plate. ▲
	Do not use Ketonics solvent or aromatic solvent to clean the LCD module, use a soft cloth moistened with a naphtha cleaning solvent. ▲
	Do not place the LCD module near organic solvents or corrosive gases. ▲
	Do not shake or jolt the LCD module. ▲

WEEE Symbol

The following symbol and description identify the WEEE marking used on the instrument and in the associated documentation.

Symbol	Description
	Marking of electrical and electronic equipment which applies to electrical and electronic equipment falling under the Directive 2002/96/EC (WEEE) and the equipment that has been put on the market after 13 August 2005. ▲

Where to Get Help

Service is available from exclusive distributors worldwide. Contact one of the phone numbers below for product support and technical information or visit us on the web at www.thermo.com/aqi.

1-866-282-0430 Toll Free

1-508-520-0430 International

Contents

Chapter 1 **Introduction 1-1**
Principle of Operation 1-2
Specifications 1-3

Chapter 2 **Installation 2-1**
Lifting 2-1
Unpacking and Inspection 2-1
Setup Procedure 2-3
Connecting External Devices 2-5
Terminal Board PCB Assemblies 2-5
I/O Terminal Board 2-6
D/O Terminal Board 2-8
25-Pin Terminal Board 2-9
Startup 2-10

Chapter 3 **Operation 3-1**
Display 3-2
Pushbuttons 3-3
Soft Keys 3-4
Software Overview 3-4
Power-Up Screen 3-6
Run Screen 3-6
Main Menu 3-7
Range Menu 3-8
Single Range Mode 3-8
Dual Range Mode 3-9
Auto Range Mode 3-10
Gas Units 3-12
SO_2, H_2S and CS Ranges 3-13
Set Custom Ranges 3-14
Custom Ranges 3-15
Averaging Time 3-15
Calibration Factors Menu 3-16
SO_2 and CS Background 3-16
SO_2, H2S and CS Span Coefficients 3-17
Reset User Calibration Defaults 3-18
Calibration Menu 3-19

Calibrate SO_2 and CS Backgrounds 3-19
Calibrate SO_2, H2S and CS Coefficients 3-20
Zero/Span Check 3-20
Next Time 3-21
Period Hours 3-21
Zero/Span/Purge Duration Minutes 3-21
Zero/Span Averaging Time 3-22
Zero/Span Ratio 3-22
Instrument Controls Menu 3-23
Auto/Manual Mode 3-23
Flash Lamp 3-24
Datalogging Settings 3-24
Select SREC/LREC 3-25
View Logged Data 3-25
Number of Records 3-25
Date and Time 3-26
Record Display 3-26
Erase Log 3-27
Select Content 3-27
Choose Item Type 3-27
Concentrations 3-28
Other Measurements 3-28
Analog Inputs 3-29
Commit Content 3-29
Reset to Default Content 3-30
Configure Datalogging 3-30
Logging Period Min 3-31
Memory Allocation Percent 3-31
Data Treatment 3-31
Communication Settings 3-32
Serial Settings 3-32
Baud Rate 3-32
Data Bits 3-33
Parity 3-33
Stop Bits 3-33
RS-232/RS-485 Selection 3-34
Instrument ID 3-34
Communication Protocol 3-35
Streaming Data Configuration 3-35
Streaming Data Interval 3-36
Choose Item Signal 3-36
Concentrations 3-36
Other Measurements 3-37
Analog Inputs 3-37
TCP/IP Settings 3-38
Use DHCP 3-38

IP Address 3-38
Netmask 3-39
Default Gateway 3-39
Host Name 3-40
Network Time Protocol Server 3-40
I/O Configuration 3-40
Output Relay Settings 3-41
Logic State 3-41
Instrument State 3-41
Alarms 3-42
Non-Alarm 3-42
Digital Input Settings 3-43
Logic State 3-44
Instrument Action 3-44
Analog Output Configuration 3-45
Allow Over/Under Range 3-45
Select Output Range 3-46
Minimum and Maximum Value 3-46
Choose Signal To Output 3-47
Analog Input Configuration 3-49
Descriptor 3-49
Units 3-50
Decimal Places 3-50
Number of Table Points 3-51
Table Point 3-51
Volts 3-51
User Value 3-52
Temperature Compensation 3-52
Pressure Compensation 3-53
Screen Contrast 3-53
Service Mode 3-54
Date/Time 3-54
Timezone 3-55
Diagnostics Menu 3-55
Program Versions 3-56
Voltages 3-56
Motherboard Voltages 3-56
Interface Board Voltages 3-57
I/O Board Voltages 3-57
Temperatures 3-57
Pressure 3-58
Sample Flow 3-58
Lamp Intensity 3-58
Optical Span Test 3-59
Analog Input Readings 3-59
Analog Input Voltages 3-59

Digital Inputs 3-60
Relay States 3-60
Test Analog Outputs 3-61
Set Analog Outputs 3-61
Instrument Configuration 3-61
Contact Information 3-62
Alarms Menu 3-62
Internal Temperature 3-63
Min and Max Internal Temperature Limits 3-63
Chamber Temperature 3-64
Min and Max Chamber Temperature Limits 3-64
Permeation Oven Gas Temperature 3-65
Min and Max Permeation Oven Temperature Limits 3-65
Converter Temperature 3-65
Min and Max Converter Temperature Limits 3-66
Pressure 3-66
Min and Max Pressure Limits 3-67
Sample Flow 3-67
Min and Max Sample Flow Limits 3-67
Lamp Intensity 3-68
Min and Max Lamp Intensity Limits 3-68
Lamp Voltage 3-68
Min and Max Lamp Voltage Limits 3-69
Zero and Span Check 3-69
Max Zero and Span Offset 3-69
Zero and Span Auto Calibration 3-70
SO_2, CS, and H_2S Concentration 3-70
Min and Max SO_2, CS, and H_2S Concentration Limits 3-71
Min Trigger 3-71
Service Menu 3-72
Flash Voltage Adjustment 3-72
Initial Flash Reference 3-73
PMT Voltage Adjustment 3-73
Range Mode Select 3-74
Converter Temperature 3-74
Pressure Calibration 3-75
Calibrate Pressure Zero 3-75
Calibrate Pressure Span 3-76
Restore Default Pressure Calibration 3-76
Flow Calibration 3-76
Calibrate Flow Zero 3-77
Calibrate Flow Span 3-77
Restore Default Flow Calibration 3-78
Input Board Test 3-78
Temperature Calibration 3-79
Analog Output Calibration 3-79

Analog Output Calibrate Zero 3-80
Analog Output Calibrate Full-Scale 3-80
Analog Input Calibration 3-80
Analog Input Calibrate Zero 3-81
Analog Input Calibrate Full-Scale 3-81
Permeation Oven Settings 3-82
Calibrate Gas Thermistor 3-82
Water Bath 3-82
Resistor 3-83
Calibrate Oven Thermistor 3-83
Permeation Oven Setpoint 3-83
Factory Calibrate Gas Thermistor 3-84
Low and High Points 3-84
Set Defaults 3-85
Factory Calibrate Oven Thermistor 3-85
Low and High Points 3-85
Set Defaults 3-86
Extended Ranges 3-86
Dilution Ratio 3-86
Display Pixel Test 3-87
Restore User Defaults 3-87
Password Menu 3-88
Set Password 3-88
Lock Instrument 3-88
Lock/Unlock and Local/Remote Operation 3-88
Change Password 3-89
Remove Password 3-89
Unlock Instrument 3-90

Chapter 4 Calibration 4-1
Zero Gas Generation 4-1
Commercial Heatless Air Dryers 4-1
Absorbing Column 4-2
Calibration Gas Generation 4-2
Cylinder Gas Dilution 4-2
Commercial Precision Dilution Systems 4-3
Permeation Tube System 4-4
Commercial Permeation Systems 4-5
Pre-Calibration 4-5
Calibration in Single Range Mode 4-7
Calibration 4-7
Set SO_2 and CS Backgrounds to Zero 4-7
Calibrate SO_2 4-9
Calibrate CS 4-10
Calibrate H_2S 4-11
Calibration in Dual Range and Auto Range Mode 4-12

Zero/Span Check 4-13

Chapter 5 Preventive Maintenance 5-1
Safety Precautions 5-1
Replacement Parts 5-2
Cleaning the Outside Case 5-2
Visual Inspection and Cleaning 5-2
Cleaning the Mirrors 5-2
Capillary Inspection and Replacement 5-3
Fan Filter Inspection and Cleaning 5-4
Sample Particulate Filter Inspection 5-5
Lamp Voltage Check 5-5
Leak Test 5-6
Pump Rebuilding 5-6

Chapter 6 Troubleshooting 6-1
Safety Precautions 6-1
Troubleshooting Guides 6-1
Board-Level Connection Diagrams 6-10
Connector Pin Descriptions 6-12
Service Locations 6-25

Chapter 7 Servicing 7-1
Safety Precautions 7-3
Firmware Updates 7-4
Accessing the Service Mode 7-4
Replacement Parts List 7-5
Cable List 7-6
External Device Connection Components 7-7
Removing the Measurement Bench and Lowering the Partition Panel 7-8
Fuse Replacement 7-10
Pump Replacement 7-11
Fan/Filter Replacement 7-12
Optical Bench Replacement 7-13
Cleaning the Mirrors 7-15
Flash Lamp Replacement 7-16
Flash Lamp Voltage Adjustment 7-18
Flash Trigger Assembly Replacement 7-18
Flash Intensity Assembly Replacement 7-19
Initial Flash Reference Adjustment 7-20
Photomultiplier Tube Replacement 7-21
PMT High Voltage Power Supply Replacement 7-22
PMT Voltage Adjustment 7-23
DC Power Supply Replacement 7-24
Analog Output Testing 7-25

Analog Output Calibration 7-28
Analog Input Calibration 7-29
Calibrating the Input Channels to Zero Volts 7-29
Calibrating the Input Channels to Full Scale 7-30
Pressure Transducer Assembly Replacement 7-31
Pressure Transducer Calibration 7-32
Flow Transducer Replacement 7-34
Flow Transducer Calibration 7-35
Heater Assembly Replacement 7-37
Heated Kicker Replacement 7-38
Converter Replacement 7-39
Thermistor Replacement 7-40
Ambient Temperature Calibration 7-41
Input Board Replacement 7-42
I/O Expansion Board (Optional) Replacement 7-43
Digital Output Board Replacement 7-45
Motherboard Replacement 7-46
Measurement Interface Board Replacement 7-47
Front Panel Board Replacement 7-48
LCD Module Replacement 7-49
Service Locations 7-50

Chapter 8 System Description 8-1
Hardware 8-1
Converter 8-2
Temperature Control Board 8-2
Selective SO_2 Scrubber 8-2
Heated Hydrocarbon Kicker 8-3
Optics 8-3
Flash Lamp 8-3
Condensing Lens 8-3
Mirror Assembly 8-3
Light Baffle 8-3
Flash Lamp Trigger Assembly 8-3
Reaction Chamber 8-4
Bandpass Filter 8-4
Photomultiplier Tube 8-4
Photodetector 8-4
Flow Sensor 8-4
Pressure Transducer 8-4
Capillary 8-4
Vacuum Pump 8-4
Permeation Oven (Option) 8-4
Software 8-5
Instrument Control 8-5
Monitoring Signals 8-5

Measurement Calculations 8-6
Output Communication 8-6
Electronics 8-6
Motherboard 8-6
External Connectors 8-7
Internal Connectors 8-7
Measurement Interface Board 8-7
Measurement Interface Board Connectors 8-7
Flow Sensor Assembly 8-8
Pressure Sensor Assembly 8-8
Bench Heater 8-8
Temperature Control Board 8-8
PMT Power Supply Assembly 8-9
Diagnostic LED 8-9
Input Board 8-9
Digital Output Board 8-9
Front Panel Connector Board 8-9
Flash Trigger Board 8-9
Flash Intensity Board 8-9
I/O Expansion Board (Optional) 8-9
I/O Components 8-10
Analog Voltage Outputs 8-10
Analog Current Outputs (Optional) 8-10
Analog Voltage Inputs (Optional) 8-11
Digital Relay Outputs 8-11
Digital Inputs 8-11
Serial Ports 8-12
RS-232 Connection 8-12
RS-485 Connection 8-13
Ethernet Connection 8-13
External Accessory Connector 8-13

Chapter 9 Optional Equipment 9-1
Internal Zero/Span and Sample Valves 9-1
Internal Permeation Span Source 9-3
Permeation Tube Installation 9-3
Computation of Concentrations 9-4
Oven Installation and Configuration 9-5
Permeation Tube Oven Calibration 9-6
Setting Perm Oven Temperature 9-6
Setting Temperature with Water Bath 9-7
Setting Temperature with Known Resistance 9-8
Determining Permeation Rate by Weight Loss 9-9
Determining Release Rate by Transfer Standard 9-10
Selective SO_2 Scrubber 9-11
Teflon Particulate Filter 9-11

I/O Expansion Board Assembly 9-11
25-Pin Terminal Board Assembly 9-11
Terminal Block and Cable Kits 9-11
Cables 9-12
Mounting Options 9-13

Appendix A Warranty A-1

Appendix B C-Link Protocol Commands B-1
Instrument Identification Number B-1
Commands B-2
Accessing Streaming Data B-3
Entering Units in PPB B-3
Service Mode B-3
Commands List B-3
Measurements B-11
Alarms B-15
Diagnostics B-20
Datalogging B-21
Calibration B-30
Keys/Display B-33
Measurement Configuration B-35
Hardware Configuration B-40
Communications Configuration B-43
I/O Configuration B-50
Record Layout Definition B-55
Format Specifier for ASCII Responses B-55
Format Specifier for Binary Responses B-56
Format Specifier for Front-Panel Layout B-56
Text B-57
Value String B-57
Value Source B-57
Alarm Information B-57
Translation Table B-57
Selection Table B-58
Button Designator B-58
Examples B-58

Appendix C MODBUS Protocol C-1
Serial Communication Parameters C-1
TCP Communication Parameters C-2
Application Data Unit Definition C-2
Slave Address C-2
MBAP Header C-2
Function Code C-3

Data C-3
Error Check C-3
Function Codes C-3
(0x01/0x02) Read Coils / Read Inputs C-3
(0x03/0x04) Read Holding Registers / Read Input Registers C-5
(0x05) Force (Write) Single Coil C-7
MODBUS Addresses Supported C-8

Appendix D Geysitech (Bayern-Hessen) Protocol D-1
Serial Communication Parameters D-1
TCP Communication Parameters D-1
Instrument Address D-1
Abbreviations Used D-2
Basic Command Structure D-2
Block Checksum Characters <BCC> D-2
Geysitech Commands D-3
Instrument Control Command (ST) D-3
Data Sampling/Data Query Command (DA) D-3
Measurements Reported in Response to DA Command D-6
Single Range Mode D-6
Dual/Auto Range Mode D-6
Operating and Error Status D-6

Figures

Figure 1–1. Model 450*i* Flow Schematic 1-3
Figure 2–1. Remove the Packing Material 2-2
Figure 2–2. Removing the Shipping Screws 2-2
Figure 2–3. Rear Panel 2-4
Figure 2–4. Atmospheric Dump Bypass Plumbing 2-5
Figure 2–5. I/O Terminal Board Views 2-6
Figure 2–6. D/O Terminal Board Views 2-8
Figure 2–7. 25-Pin Terminal Board Views 2-9
Figure 3–1. Front Panel Display 3-2
Figure 3–2. Front Panel Pushbuttons 3-3
Figure 3–3. Flowchart of Menu-Driven Software 3-5
Figure 3–4. Pinout of Rear Panel Connector 3-9
Figure 3–5. Analog Output in Auto Range Mode 3-11
Figure 4–1. Cylinder Gas Dilution System 4-3
Figure 4–2. Permeation Tube System 4-4
Figure 5–1. Inspecting and Replacing the Capillary 5-4
Figure 5–2. Inspecting and Cleaning the Fan 5-5
Figure 5–3. Rebuilding the Pump 5-7
Figure 6–1. Board-Level Connection Diagram - Common Electronics 6-10
Figure 6–2. Board-Level Connection Diagram – Measurement System 6-11
Figure 7–1. Properly Grounded Antistatic Wrist Strap 7-4
Figure 7–2. Model 450i Component Layout 7-8
Figure 7–3. Removing the Measurement Bench and Lowering the Partition Panel 7-9
Figure 7–4. Replacing the Pump 7-11
Figure 7–5. Replacing the Fan 7-13
Figure 7–6. Replacing the Optical Bench 7-15
Figure 7–7. Replacing the Flash Lamp and Flash Trigger Assembly 7-17
Figure 7–8. Replacing the Flash Intensity Assembly 7-20
Figure 7–9. Replacing the PMT 7-22
Figure 7–10. Replacing the PMT High Voltage Power Supply (HVPS) 7-23
Figure 7–11. Replacing the DC Power Supply 7-25
Figure 7–12. Rear Panel Analog Input and Output Pins 7-27
Figure 7–13. Replacing the Pressure Transducer Assembly 7-32
Figure 7–14. Replacing the Flow Transducer 7-35
Figure 7–15. Replacing the Heater Assembly 7-38

Figure 7–16. Replacing the Heated Kicker Assembly 7-39
Figure 7–17. Replacing the Thermistor 7-41
Figure 7–18. Replacing the Input Board 7-43
Figure 7–19. Replacing the I/O Expansion Board (Optional) 7-44
Figure 7–20. Rear Panel Board Connectors 7-45
Figure 7–21. Replacing the Measurement Interface Board 7-48
Figure 7–22. Replacing the Front Panel Board and the LCD Module 7-49
Figure 8–1. Hardware Components 8-2
Figure 9–1. Zero/Span Valve Flow Schematic 9-2
Figure 9–2. Zero/Span Dual Valve Flow Schematic 9-2
Figure 9–3. Internal Permeation Span Source Flow Diagram 9-3
Figure 9–4. Cal Oven Therm Resistor Screen 9-7
Figure 9–5. Cal Gas Therm Bath Screen 9-8
Figure 9–6. Cal Gas Therm Resistor Screen 9-9
Figure 9–7. Rack Mount Option Assembly 9-14
Figure 9–8. Bench Mounting 9-15
Figure 9–9. EIA Rack Mounting 9-16
Figure 9–10. Retrofit Rack Mounting 9-17
Figure B–1. Flags B-14

Tables

Table 1–1. Model 450i Specifications....1-3
Table 1–2. Model 450i Optional Permeation Oven Specifications....1-5
Table 2–1. I/O Terminal Board Pin Descriptions....2-6
Table 2–2. D/O Terminal Board Pin Descriptions....2-8
Table 2–3. 25-Pin Terminal Board Pin Descriptions....2-9
Table 3–1. Front Panel Pushbuttons....3-3
Table 3–2. Default Analog Outputs in Single Range Mode....3-9
Table 3–3. Default Analog Outputs in Dual Range Mode....3-10
Table 3–4. Default Analog Outputs in Auto Range Mode....3-11
Table 3–5. Standard Ranges....3-13
Table 3–6. Extended Ranges....3-14
Table 3–7. Analog Output Zero to Full Scale Values....3-47
Table 3–8. Signal Types Group Choices....3-48
Table 6–1. Troubleshooting - Power-Up Failures....6-2
Table 6–2. Troubleshooting - Calibration Failures....6-3
Table 6–3. Troubleshooting - Measurement Failures....6-5
Table 6–4. Troubleshooting - Alarm Messages....6-8
Table 6–5. Motherboard Connector Pin Descriptions....6-12
Table 6–6. Measurement Interface Board Connector Pin Descriptions....6-17
Table 6–7. Front Panel Board Connector Pin Descriptions....6-19
Table 6–8. I/O Expansion Board (Optional) Connector Pin Descriptions....6-21
Table 6–9. Digital Output Board Connector Pin Descriptions....6-22
Table 6–10. Input Board Connector Pin Descriptions....6-24
Table 6–11. Flash Trigger Pack Pin Descriptions....6-24
Table 6–12. Flash Intensity Assembly Pin Descriptions....6-24
Table 6–13. Converter Temperature Control Board Pin Descriptions....6-25
Table 7–1. Model 450*i* Replacement Parts....7-5
Table 7–2. Model 450*i* Cables....7-6
Table 7–3. External Device Connection Components....7-7
Table 7–4. Analog Output Channels and Rear Panel Pin Connections....7-27
Table 7–5. Analog Input Channels and Rear Panel Pin Connections....7-27
Table 8–1. RS-232 DB9 Connector Pin Configurations....8-13
Table 8–2. RS-485 DB9 Connector Pin Configuration....8-13
Table 9–1. Cable Options....9-12
Table 9–2. Color Codes for 25-Pin and 37-Pin Cables....9-12
Table 9–3. Mounting Options....9-13

Table B–1. Command Response Error Descriptions....B-2
Table B–2. C-Link Protocol Commands....B-3
Table B–3. Averaging Times....B-11
Table B–4. Alarm Trigger Values....B-20
Table B–5. Record Output Formats....B-25
Table B–6. Stream Time Values....B-30
Table B–7. Standard Ranges....B-35
Table B–8. Extended Ranges....B-36
Table B–9. Reply Termination Formats....B-47
Table B–10. Allow Mode Command Values....B-49
Table B–11. Power Up Mode Command Values....B-50
Table B–12. Set Layout Ack Values....B-50
Table B–13. Analog Current Output Range Values....B-51
Table B–14. Analog Voltage Output Range Values....B-52
Table B–15. Default Output Assignment....B-53
Table C–1. Read Coils for 450i....C-8
Table C–2. Read Registers for 450i....C-10
Table C–3. Write Coils for 450*i*....C-12
Table D–1. Operating Status for Model 450*i*....D-6
Table D–2. Error Status for Model 450*i*....D-7

Chapter 1
Introduction

The Model 450*i* Pulsed Fluorescence SO_2-H_2S-CS Analyzer combines proven detection technology, easy to use menu-driven software, and advanced diagnostics to offer unsurpassed flexibility and reliability.

Note CS represents Combined Sulfur. ▲

The Model 450*i* has the following features:

- 320 x 240 graphics display
- Menu-driven software
- Field programmable ranges
- User-selectable single/dual/auto range modes
- Multiple user-defined analog outputs
- Analog input options
- High sensitivity
- Fast response time
- Linearity through all ranges
- Independent SO_2-H_2S-CS ranges
- Internal sample pump
- Totally self contained
- Insensitive to changes in flow and ambient temperature
- User-selectable digital input/output capabilities
- Standard communications features include RS232/485 and Ethernet
- C-Link, MODBUS, Geysitech (Bayern-Hessen), streaming data, and NTP (Network Time Protocol) protocols. Simultaneous connections from different locations over Ethernet.

For details of the analyzer's principle of operation and product specifications, see the following topics:

- "Principle of Operation" on page 1-2 describes the analyzer's operating principles.
- "Specifications" on page 1-3 provides a list of the analyzer's performance specifications.

Thermo Fisher Scientific is pleased to supply this pulsed fluorescence SO_2-H_2S-CS analyzer. We are committed to the manufacture of instruments exhibiting high standards of quality, performance, and workmanship. Service personnel are available for assistance with any questions or problems that may arise in the use of this analyzer. For more information on servicing, see the "Servicing" chapter.

Principle of Operation

The Model 450*i* operates on the principle that H_2S can be converted to SO_2. SO_2 molecules absorb ultraviolet (UV) light and become excited at one wavelength, then decay to a lower energy state emitting UV light at a different wavelength. Specifically,

$$H_2S \rightarrow SO_2$$
$$SO_2 + hv1 \rightarrow SO_2^* \rightarrow SO2 + hv2$$

The sample is drawn into the Model 450*i* through the SAMPLE bulkhead, as shown in **Figure 1–1**. From the bulkhead the sample is either shunted to a converter or bypasses the converter and is led straight through to a hydrocarbon kicker. When sample goes through the converter, the instrument response represents the combined sulphur (CS) reading, that is, the sum of SO_2, H_2S, and any residual reduced sulphur species. When bypassing the converter, the instrument reads SO_2 only. The difference between the two signals is the inferred H_2S reading.

The sample, whether coming directly from the bulkhead or processed in the converter, then flows through a hydrocarbon kicker. The kicker removes hydrocarbons from the sample by forcing the hydrocarbon molecules to differentially permeate through the tube wall. The SO_2 molecules pass through the hydrocarbon kicker unaffected.

The sample then flows into the fluorescence chamber, where pulsating UV light excites the SO_2 molecules. The condensing lens focuses the pulsating UV light into the mirror assembly. The mirror assembly contains four selective mirrors that reflect only the wavelengths which excite SO_2 molecules.

As the excited SO_2 molecules decay to lower energy states they emit UV light that is proportional to the SO_2 concentration. The bandpass filter allows only the wavelengths emitted by the excited SO_2 molecules to reach the photomultiplier tube (PMT). The PMT detects the UV light emission from the decaying SO_2 molecules. The photodetector, located at the back of the fluorescence chamber, continuously monitors the pulsating UV light

source and is connected to a circuit that compensates for fluctuations in the UV light.

As the sample leaves the optical chamber, it passes through a flow sensor, a capillary, and the shell side of the hydrocarbon kicker. The Model 450*i* outputs the SO_2-H_2S-CS ranges concentration levels to the front panel display and the analog outputs, and also makes the data available over the serial or Ethernet connection.

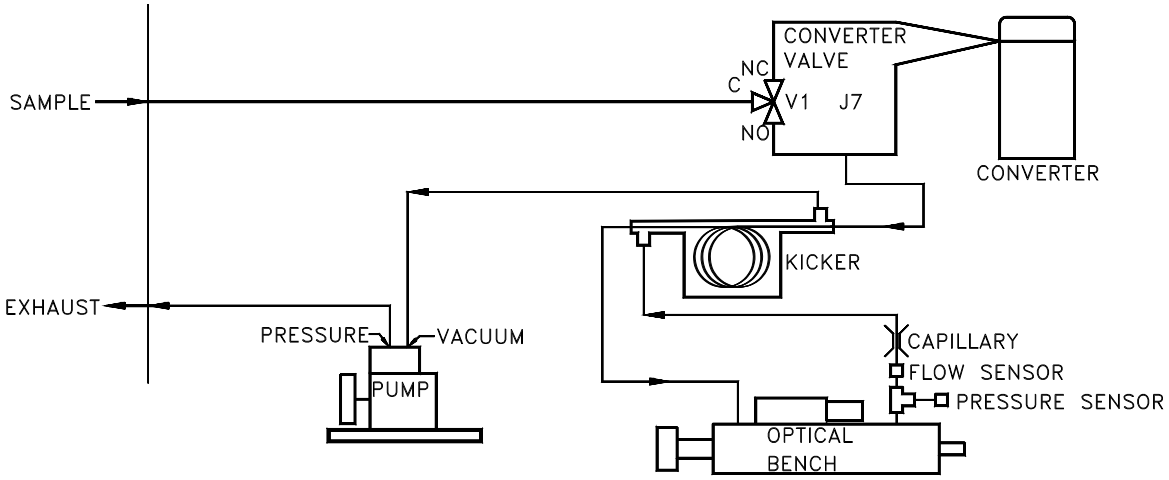

Figure 1–1. Model 450*i* Flow Schematic

Specifications

Table 1–1. Model 450i Specifications

Preset ranges	0-0.05, 0.1, 0.2, 0.5, 1, 2, 5 and 10 ppm 0.2, 0.5, 1, 2, 5, 10, 20 and 25 mg/m^3	
Extended Ranges	0-0.5, 1, 2, 5, 10, 20, 50 and 100 ppm 0-2, 5, 10, 20, 50, 100, 200 and 250 mg/m^3	
Custom ranges	0-0.05 to 10 ppm (0-0.5 to 100 ppm in extended range) 0-0.2 to 25 mg/m^3 (0-2 to 250 mg/m^3 in extended range)	
Zero noise	*Manual Mode* *(SO_2 or CS)* 1.0 ppm RMS 0.5 ppm RMS 0.25 ppm RMS	*Automatic Mode* *(SO_2 or H_2S)* 3.0 ppb RMS (10 second averaging time) 1.5 ppb RMS (60 second averaging time) 0.75 ppb RMS (300 second averaging time)

Lower detectable limit	*Manual Mode* *(SO_2 or CS)*	*Automatic Mode* *(SO_2 or H_2S)*
	2.0 ppb	6.0 ppb (10 second averaging time)
	1.0 ppb	2.0 ppb (60 second averaging time)
	0.5 ppb	1.5 ppb (300 second averaging time)
Zero drift (24 hour)	< 1 ppb	
Span drift (24 hour)	±1% full-scale	
Response time	80 sec (10 second averaging time) 110 sec (60 second averaging time) 320 sec (300 second averaging time)	
Linearity	±1% of full-scale ≤ 100 ppm ±5% of full-scale > 100 ppm	
Sample flow rate	1.0 lpm (standard)	
Operating temperature	15-35 °C (may be safely operated over the range of 0-45 °C. (Non-condensing environments. Performance specifications based on operation within 15-35 °C range.)	
Power requirements	100 VAC @ 50/60 Hz 115 VAC @ 50/60 Hz 220-240 VAC @ 50/60 Hz 300 Watts	
Physical dimensions	16.75" (W) X 8.62" (H) X 23" (D)	
Weight	Approximately 48 lbs.	
Analog outputs	6 voltage outputs; 0–100 mV, 1, 5, 10 V (user selectable), 5% of full-scale over/under range (user selectable), 12 bit resolution, measurement output user selectable per channel	
Digital outputs	1 power fail relay Form C, 10 digital relays Form A, user selectable alarm output, relay logic, 100 mA @ 200 VDC	
Digital inputs	16 digital inputs, user select programmable, TTL level, pulled high	
Serial Ports	1 RS-232 or RS-485 with two connectors, baud rate 1200–115200, data bits, parity, and stop bits, protocols: C-Link, MODBUS, Geysitech (Bayern-Hessen), and streaming data (all user selectable)	
Ethernet connection	RJ45 connector for 10 Mbs Ethernet connection, static or dynamic TCP/IP addressing, up to 3 simultaneous connections per protocol.	

Table 1–2. Model 450i Optional Permeation Oven Specifications

Temperature control	Single Point 45 °C
Temperature stability	±0.1 °C
Warm-up time	1 hour (permeation device can take 24 to 48 hours to stabilize)
Carrier gas flow	≈ 70 scc/min
Chamber size	Accepts permeation tubes up to 9 cm in total length; 1 cm in diameter
Temperature range	15–30 °C
Physical dimensions	Contained inside the Model 450*i*
Power requirements	120 VAC @ 50/60 Hz, 50 watts (in addition to the standard Model 450*i*)
Weight	Approximately five pounds (in addition to standard Model 450*i*)

Chapter 2
Installation

Installation of the Model 450*i* includes lifting the instrument, unpacking and inspection, connecting sample, zero, span, and exhaust lines, and attaching the analog and/or digital outputs to a recording device. The installation should always be followed by instrument calibration as described in the "Calibration" chapter of this manual.

This chapter provides the following recommendations and procedures for installing the instrument:

- "Lifting" on page 2-1
- "Unpacking and Inspection" on page 2-1
- "Setup Procedure" on page 2-3
- "Connecting External Devices" on page 2-5
- "Startup" on page 2-10

Lifting

When lifting the instrument, use a procedure appropriate to lifting a heavy object, such as, bending at the knees while keeping your back straight and upright. Grasp the instrument at the bottom in the front and at the rear of the unit. Although one person can lift the unit, it is desirable to have two persons lifting, one by grasping the bottom in the front and the other by grasping the bottom in the rear.

Equipment Damage Do not attempt to lift the instrument by the cover or other external fittings. ▲

Unpacking and Inspection

The Model 450*i* is shipped complete in one container. If there is obvious damage to the shipping container when you receive the instrument, notify the carrier immediately and hold for inspection. The carrier is responsible for any damage incurred during shipment.

Use the following procedure to unpack and inspect the instrument.

1. Remove the instrument from the shipping container and set it on a table or bench that allows easy access to both the front and rear.

2. Remove the cover to expose the internal components.

3. Remove the packing material (**Figure 2–1**).

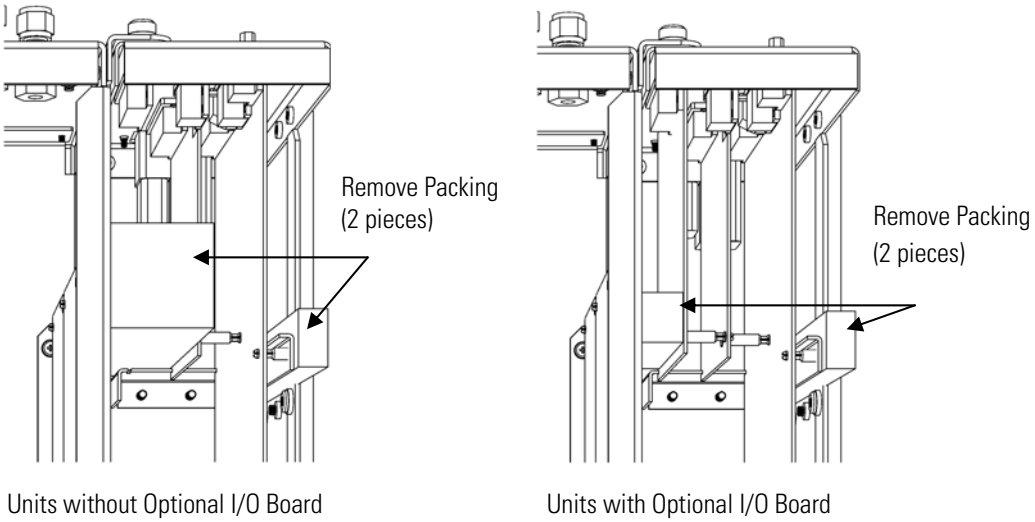

Figure 2–1. Remove the Packing Material

4. Remove the three shipping screws from the pump (**Figure 2–2**).

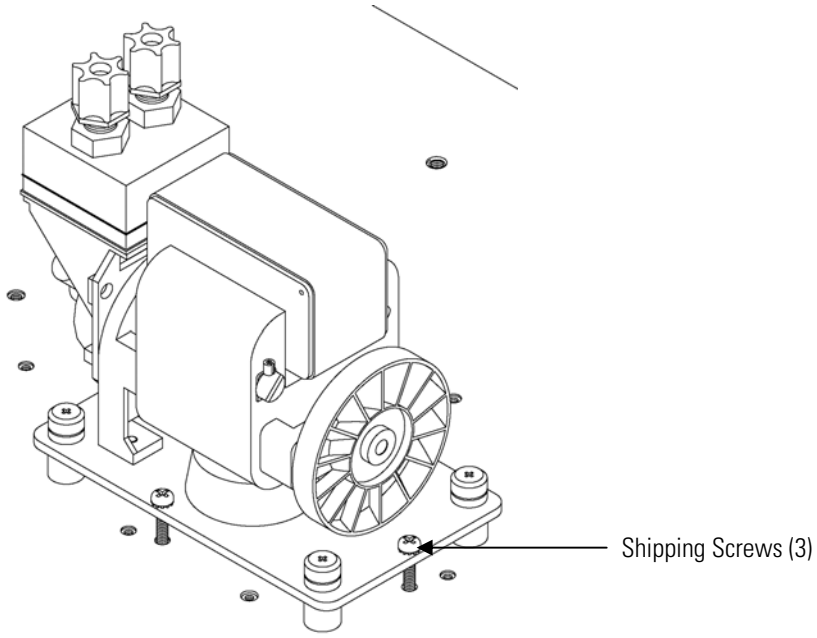

Figure 2–2. Removing the Shipping Screws

5. Check for possible damage during shipment.

6. Check that all connectors and circuit boards are firmly attached.

7. Re-install the cover.

8. Remove any protective plastic material from the case exterior.

Setup Procedure

Use the following procedure to setup the instrument.

1. Connect the sample line to the SAMPLE bulkhead on the rear panel (**Figure 2–3**) Ensure that the sample line is not contaminated by dirty, wet, or incompatible materials. All tubing should be constructed of FEP Teflon®, 316 stainless steel, borosilicate glass, or similar tubing with an OD of 1/4-inch and a minimum ID of 1/8-inch. The length of the tubing should be less than 10 feet.

Note Gas must be delivered to the instrument free of particulates. It may be necessary to use the Teflon particulate filter as described in "Teflon Particulate Filter" on page 9-11. ▲

Note If the sample may contain particulates larger than 5 microns, it should be filtered before introducing it to the instrument. Use a filter (such as Teflon) that does not interact with SO_2 in the sample. If a sample filter is used, all calibrations and span checks must be performed through the filter. The filter element should be replaced regularly to prevent the absorption of SO_2 by trapped material on the filter. ▲

Note Gas must be delivered to the instrument at atmospheric pressure. It may be necessary to use an atmospheric bypass plumbing arrangement as shown in **Figure 2–4** if gas pressure is greater than atmospheric pressure. ▲

2. Connect the EXHAUST bulkhead to a suitable vent. The exhaust line should be 1/4-inch OD with a minimum ID of 1/8-inch. The length of the exhaust line should be less than 10 feet. Verify that there is no restriction in this line.

3. Connect a suitable recording device to the rear panel connector. For detailed information about connecting to the instrument, refer to:

   "Connecting External Devices" on page 2-5

   "Instrument Controls > I/O Configuration" on page 3-40

"External Device Connection Components" on page 7-7.

"Terminal Block and Cable Kits" on page 9-11

For detailed information about troubleshooting a connection, refer to "Analog Output Testing" on page 7-25.

4. Plug the instrument into an outlet of the appropriate voltage and frequency.

WARNING The Model 450*i* is supplied with a three-wire grounding cord. Under no circumstances should this grounding system be defeated. ▲

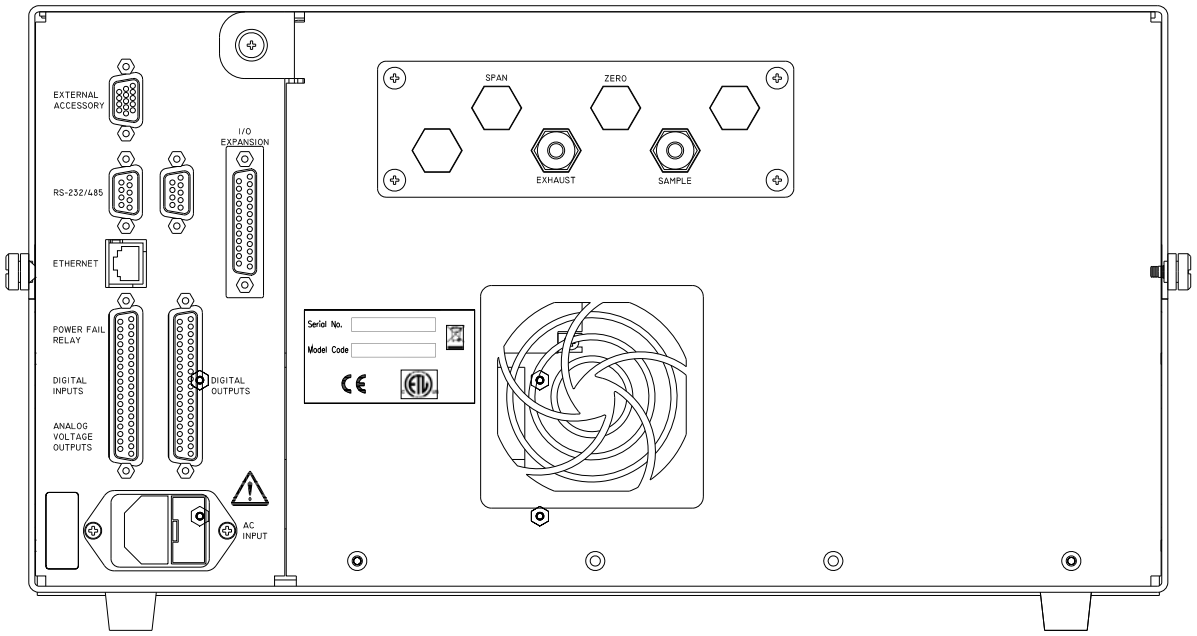

Figure 2–3. Rear Panel

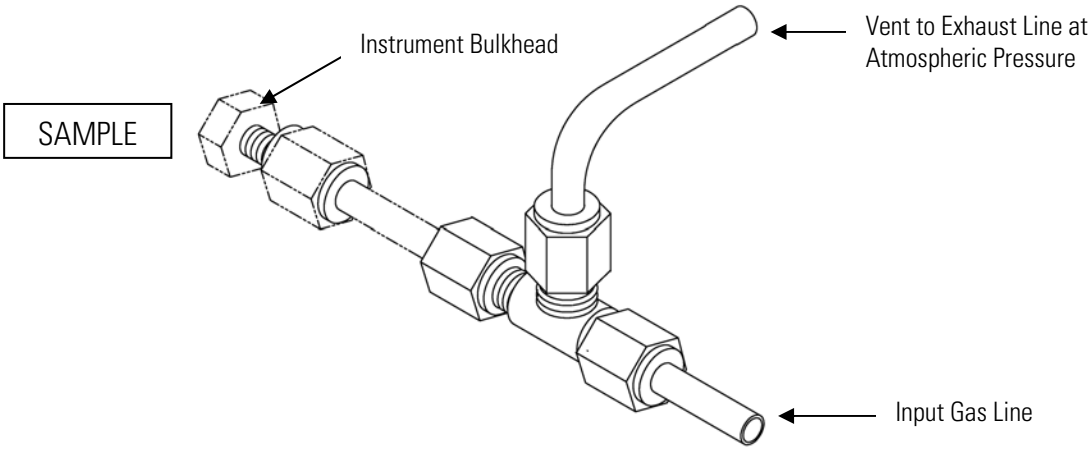

Figure 2–4. Atmospheric Dump Bypass Plumbing

Connecting External Devices

Several components are available for connecting external devices to *i*Series instruments.

These connection options include:

- Individual terminal board PCB assemblies
- Terminal block and cable kits (optional)
- Individual cables (optional)

For detailed information on the optional connection components, refer to the "Optional Equipment" chapter. For associated part numbers, refer to the "Servicing" chapter.

Terminal Board PCB Assemblies

The terminal board PCB assembly is a circuit board with a D-Sub connector on one side and a series of screw terminals on the other. This assembly provides a convenient mechanism for connecting wires from a data system to the analyzer's I/O connectors.

The following terminal board PCB assemblies are available for *i*Series instruments:

- I/O terminal board PCB assembly, 37 pin (standard)
- D/O terminal board PCB assembly, 37 pin (standard)
- 25-pin terminal board PCB assembly, (included with optional I/O Expansion Board)

I/O Terminal Board

Figure 2–5 shows the recommended method for attaching the cable to the terminal board using the included tie-down and spacer. **Table 2–1** identifies the connector pins and associated signals.

Note For default analog output channel assignment, see single, dual, and auto ranges in Chapter 3. ▲

Note All of the I/O available in the instrument are not brought out on this terminal board, if more I/O is desired, an alternative means of connection is required. ▲

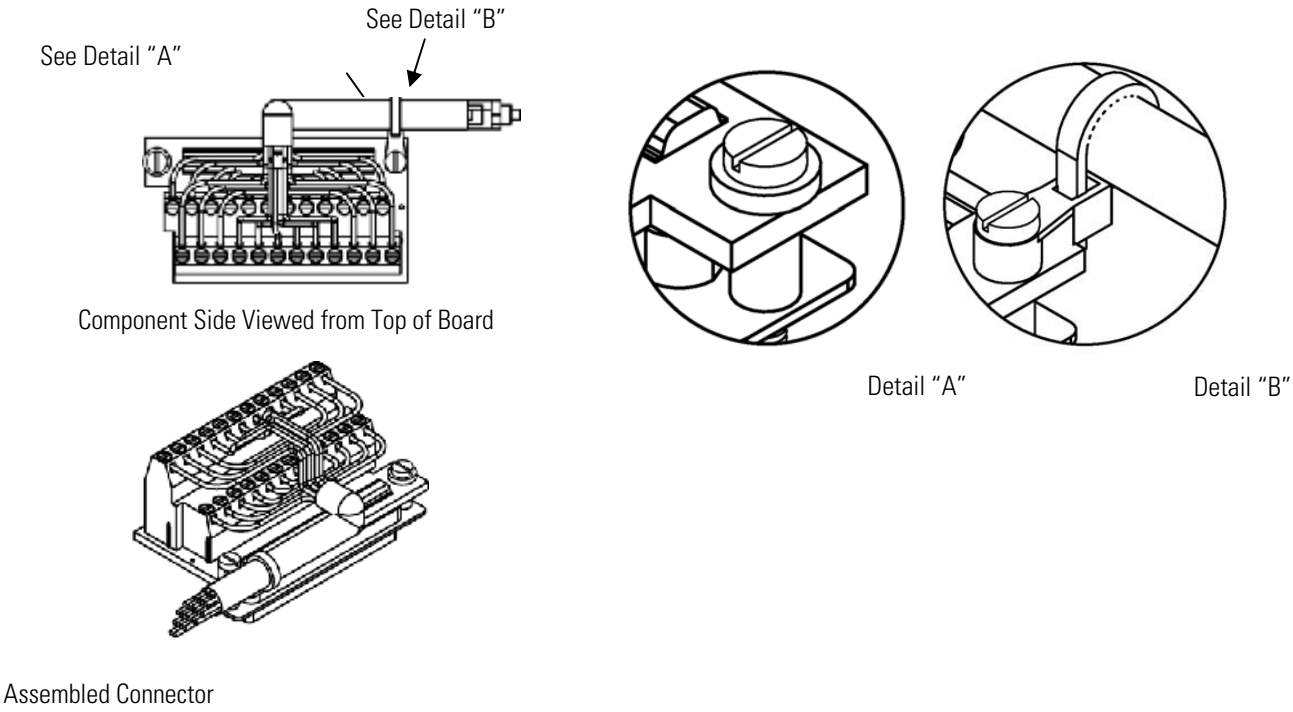

Figure 2–5. I/O Terminal Board Views

Table 2–1. I/O Terminal Board Pin Descriptions

Screw	Signal Description	Pin	Signal Description
1	Analog1	13	Power_Fail_NC
2	Analog ground	14	Power_Fail_COM
3	Analog2	15	Power_Fail_NO
4	Analog ground	16	TTL_Input1
5	Analog3	17	TTL_Input2

Screw	Signal Description	Pin	Signal Description
6	Analog ground	18	TTL_Input3
7	Analog4	19	TTL_Input4
8	Analog ground	20	Digital ground
9	Analog5	21	TTL_Input5
10	Analog ground	22	TTL_Input6
11	Analog6	23	TTL_Input7
12	Analog ground	24	Digital ground

D/O Terminal Board

Figure 2–6 shows the recommended method for attaching the cable to the terminal board using the included tie-down and spacer. **Table 2–2** identifies the connector pins and associated signals.

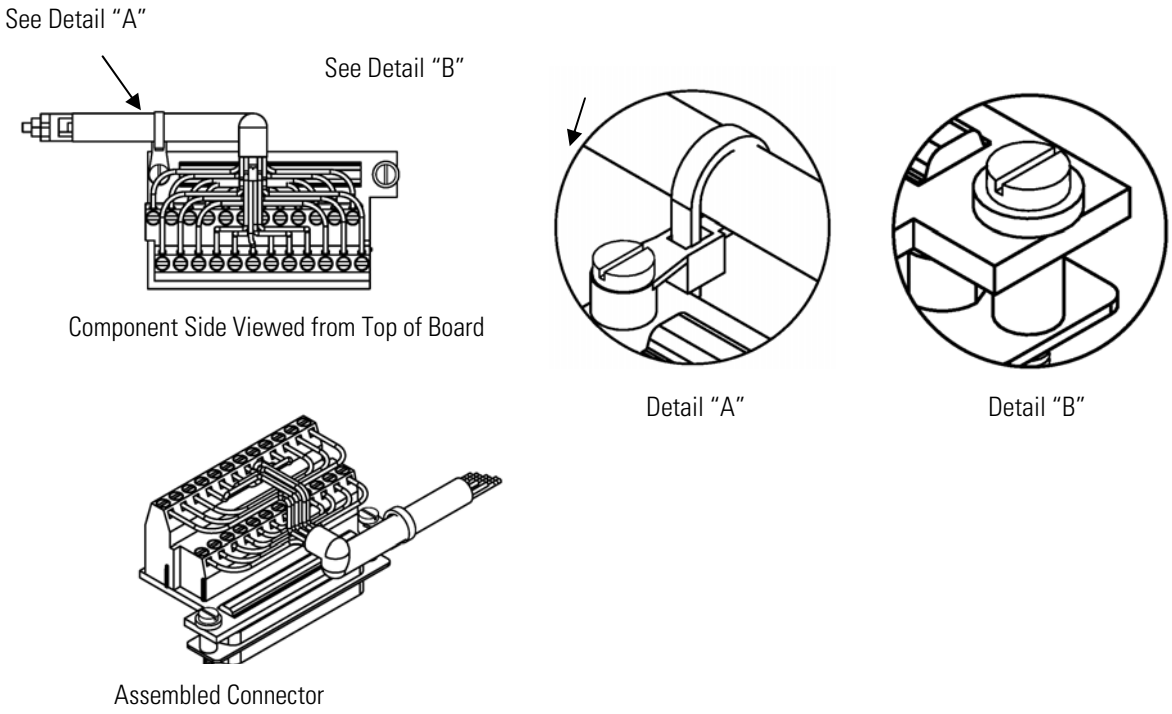

Figure 2–6. D/O Terminal Board Views

Table 2–2. D/O Terminal Board Pin Descriptions

Screw	Signal Description	Pin	Signal Description
1	Relay1_ContactA	13	Relay7_ContactA
2	Relay1_ContactB	14	Relay7_ContactB
3	Relay2_ContactA	15	Relay8_ContactA
4	Relay2_ContactB	16	Relay8_ContactB
5	Relay3_ContactA	17	Relay9_ContactA
6	Relay3_ContactB	18	Relay9_ContactB
7	Relay4_ContactA	19	Relay10_ContactA
8	Relay4_ContactB	20	Relay10_ContactB
9	Relay5_ContactA	21	Not Used
10	Relay5_ContactB	22	+24V
11	Relay6_ContactA	23	Not Used
12	Relay6_ContactB	24	+24V

25-Pin Terminal Board

The 25-pin terminal board is included with the optional I/O Expansion Board.

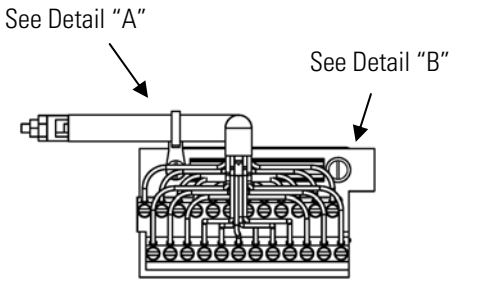

Component Side Viewed from Top of Board

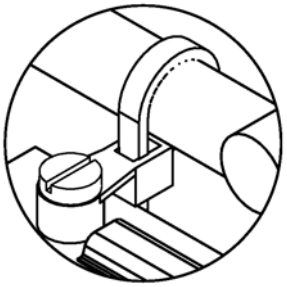

Detail "A"

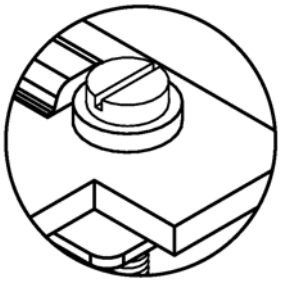

Detail "B"

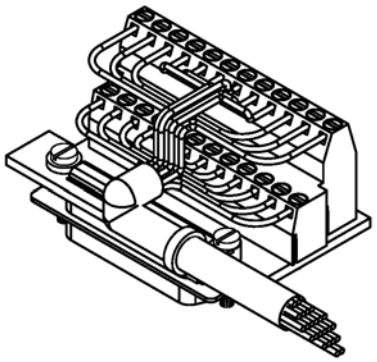

Assembled Connector

Figure 2–7. 25-Pin Terminal Board Views

Table 2–3. 25-Pin Terminal Board Pin Descriptions

Screw	Signal Description	Pin	Signal Description
1	IOut1	13	Analog_In1
2	Isolated ground	14	Analog_In2
3	IOut2	15	Analog_In3
4	Isolated ground	16	Ground
5	IOut3	17	Analog_In4
6	Isolated ground	18	Analog_In5
7	IOut4	19	Analog_In6
8	Isolated ground	20	Ground
9	IOut5	21	Analog_In7
10	Isolated ground	22	Analog_In8
11	IOut6	23	Ground
12	Isolated ground	24	Ground

Startup

Use the following procedure when starting the instrument.

1. Turn the power ON.

2. Allow 30 minutes for the instrument to stabilize.

3. Set instrument parameters such as operating ranges and averaging times to appropriate settings. For more information about instrument parameters, see the “Operation” chapter.

4. Before beginning actual monitoring, perform a multipoint calibration as described in the “Calibration” chapter.

Chapter 3
Operation

This chapter describes the front panel display, front panel pushbuttons, and menu-driven software. For details, see the following topics:

- "Display" on page 3-2
- "Pushbuttons" on page 3-3
- "Software Overview" on page 3-4
- "Range Menu" on page 3-8
- "Averaging Time" on page 3-15
- "Calibration Factors Menu" on page 3-16
- "Calibration Menu" on page 3-19
- "Instrument Controls Menu" on page 3-23
- "Diagnostics Menu" on page 3-55
- "Alarms Menu" on page 3-62
- "Service Menu" on page 3-72
- "Password Menu" on page 3-88

Display

The 320 x 240 graphics liquid-crystal display (LCD) (**Figure 3–1**) shows the sample concentrations, instrument parameters, instrument controls, help, and error messages. Some menus contain more items than can be displayed at one time. For these menus, use ⬆ and ⬇ to move the cursor up and down to each item.

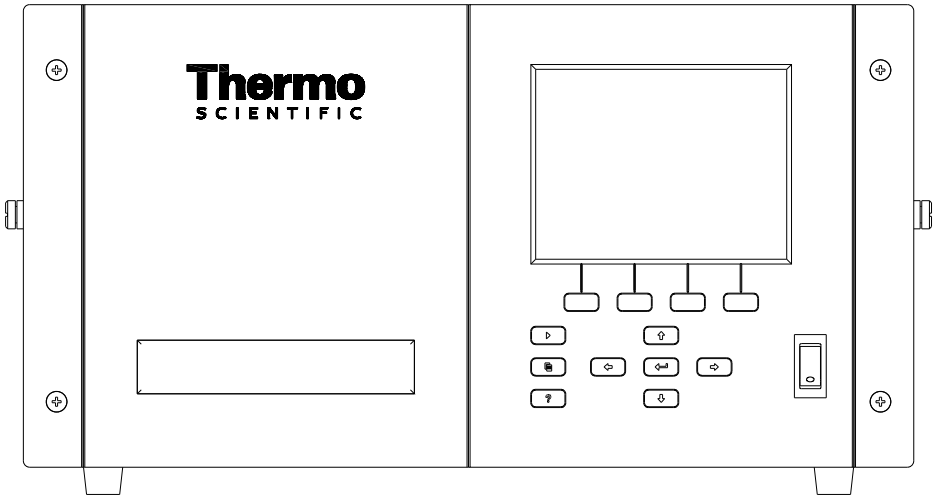

Figure 3–1. Front Panel Display

CAUTION If the LCD panel breaks, do not to let the liquid crystal contact your skin or clothes. If the liquid crystal contacts your skin or clothes, wash it off immediately using soap and water. ▲

Pushbuttons

The Pushbuttons (**Figure 3–2**) allow the user to traverse the various screens/menus. **Table 3–1** lists the front panel pushbuttons and their functions.

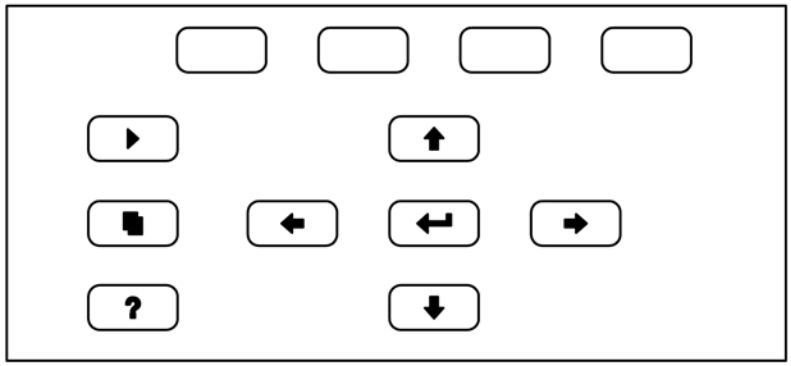

Figure 3–2. Front Panel Pushbuttons

Table 3–1. Front Panel Pushbuttons

Key Name	Function
[ ] = Soft Keys	The [ ] (soft keys) are used to provide shortcuts that allow the user to jump to user-selectable menu screens. For more information on processing soft keys, see "Soft Keys".
[▶] = Run	The [▶] is used to display the Run screen. The Run screen normally displays the SO_2, H_2S, and CS concentrations.
[▪] = Menu	The [▪] is used to display the Main Menu when in the Run screen, or back up one level in the menu system. For more information about the Main Menu, see "Main Menu" later in this chapter.
[?] = Help	The [?] is context-sensitive, that is, it provides additional information about the screen that is being displayed. Press [?] for a brief explanation about the current screen or menu. Help messages are displayed using lower case letters to easily distinguish them from the operating screens. Press [▶] to return to the Run screen or any other key to exit a help screen..
[↑] [↓] = Up, Down [←] [→] = Left, Right	The four arrow pushbuttons ([↑], [↓], [←], and [→]) move the cursor up, down, left, and right or change values and states in specific screens.
[↵] = Enter	The [↵] is used to select a menu item, accept/set/save a change, and/or toggle on/off functions.

Soft Keys

The Soft Keys are multi-functional keys that use part of the display to identify their function at any moment. The function of the soft keys allows immediate access to the menu structure and most often used menus and screens. They are located directly underneath the display and as the keys' functions change this is indicated by user-defined labels in the lower part of the display, so that the user knows what the keys are to be used for.

To change a soft key, place the menu cursor ">" on the item of the selected menu or screen you wish to set. Press [→] followed by the selected soft key within 1 second of pressing the right-arrow key. The edit soft key prompt will be displayed for configuration for the new label.

Note Not all menu items may be assigned to soft keys. If a particular menu or screen item cannot be assigned, the Edit Soft Key Prompt screen will not come up upon entering right-arrow-soft key combinations. All items under the Service menu (including the menu itself) cannot be assigned soft keys. ▲

Software Overview

The Model 450*i* utilizes the menu-driven software as illustrated by the flowchart in **Figure 3–3**. The Power-Up screen, shown at the top of the flowchart, is displayed each time the instrument is turned on. This screen is displayed while the instrument is warming up and performing self-checks. After the warm-up period, the Run screen is automatically displayed. The Run screen is the normal operating screen. It displays the SO_2, H_2S, and CS concentrations, depending on operating mode. From the Run screen, the Main Menu can be displayed by pressing [■]. The Main Menu contains a list of submenus. Each submenu contains related instrument settings. This chapter describes each submenu and screen in detail. Refer to the appropriate sections for more information.

Note If the selective SO_2 scrubber option is installed, the run screen will only show the H_2S concentration. In actuality, the instrument is locked in CS only mode, so all of the screens for ranges, calibration factors, datalogging, and remote I/O will show CS instead of H_2S. ▲

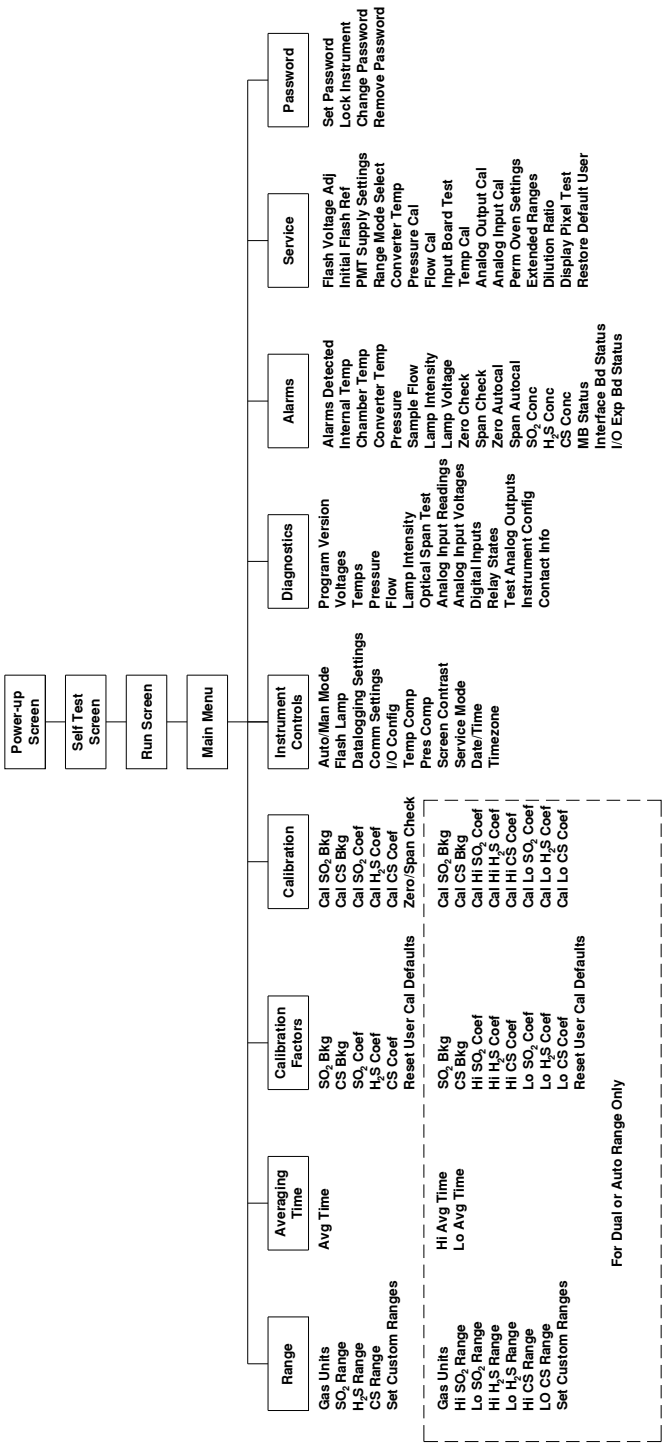

Figure 3–3. Flowchart of Menu-Driven Software

Power-Up Screen

The Power-Up screen is displayed on power up of the Model 450*i*. This screen is displayed while the internal components are warming up and diagnostic checks are performed.

Run Screen

The Run screen displays the SO_2, H_2S, and CS concentrations. The status bar displays the time, the password (lock) icon, service (wrench) icon, alarm (bell) icon, and optional zero/span sample solenoid valve status, if installed.

Note Time is always displayed in 24-hour format. ▲

Status Bar Icons

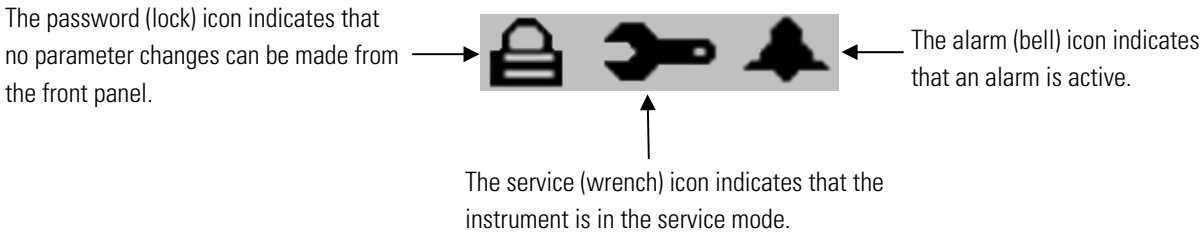

The word “SAMPLE” on the left of the status bar indicates the analyzer has the span/zero valve option and is in “SAMPLE” mode. Other modes appear in the same area of the display as “ZERO” or “SPAN” (or “SPAN 2” if the dual span option is installed). For more information about the optional solenoid valves, see Chapter 9, “Optional Equipment”.

When operating in dual or auto range mode two sets of coefficients are used to calculate the SO_2-H_2S-CS “High” and “Low” concentrations. Also, two averaging times are used -one for each range. The title bar indicates which range concentrations are displayed. The words “LOW RANGE CONCENTRATION” on the top of the display indicates that the low

concentration is displayed. In dual range mode, pressing the ↑ and ↓ arrows will toggle between high and low concentrations. The example that follows shows the Run screen in single range mode.

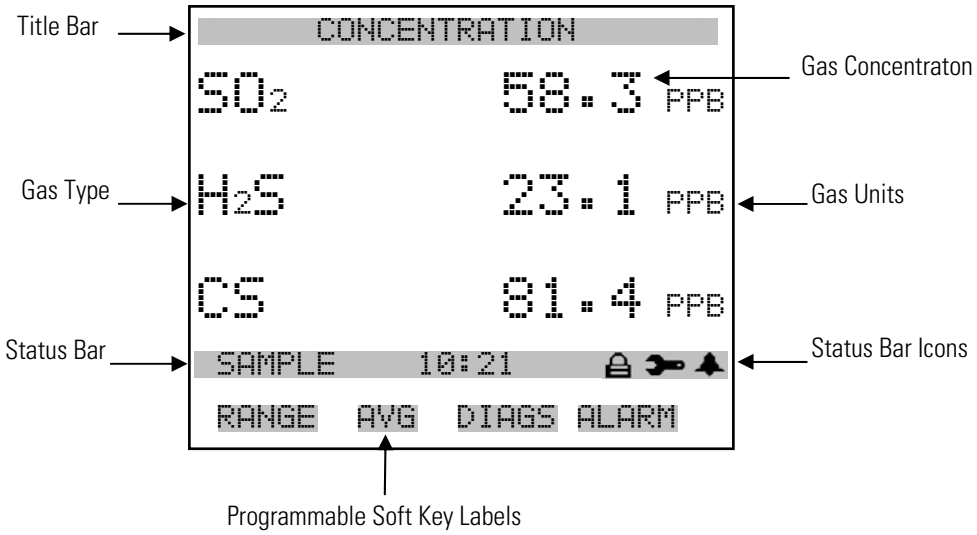

Main Menu

The Main Menu contains a number of submenus. Instrument parameters and settings are divided into these submenus according to their function. The concentration appears above the main menu and submenus in every screen. The Service menu is visible only when the instrument is in service mode. For more information on the service mode, see "Service Mode" later in this chapter.

- Use ↑ and ↓ to move the cursor up and down.
- Press ↵ to select a choice.
- Press ■ to return to the Main Menu or ▸ to return to the Run screen.

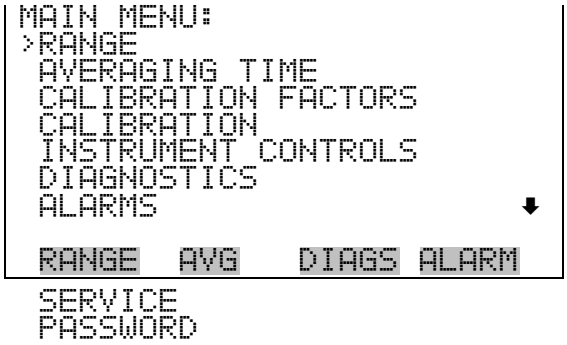

Range Menu

The Range menu allows the operator to select the gas units, SO_2-H_2S-CS ranges, and to set the custom ranges. The screens that follow show the range menu in single mode and dual/auto range modes. The only difference between the screens are the words “HI” and “LO” to indicate which range is displayed. For more information about the single, dual and auto range modes, see “Single Range Mode”, “Dual Range Mode”, and “Auto Range Mode.”

In the Main Menu, choose **Range**.

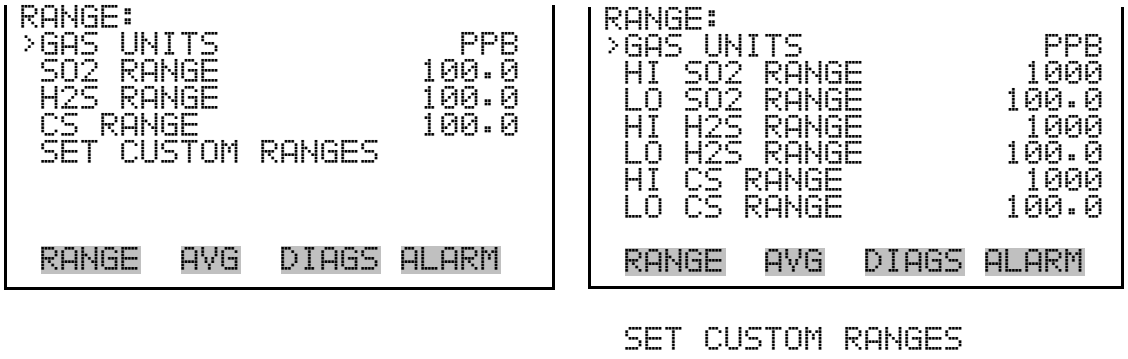

Single Range Mode

In the single range mode, while in SO_2/CS mode, the SO_2, H_2S, and CS channels each have one range, one averaging time, and one span coefficient.

By default, three analog outputs are arranged on the rear panel connector as shown in **Figure 3–4**. See **Table 3–2** for channels and pin connections. Single range mode may be selected from the “Range Mode Select” in the “Service Menu”, later in this chapter.

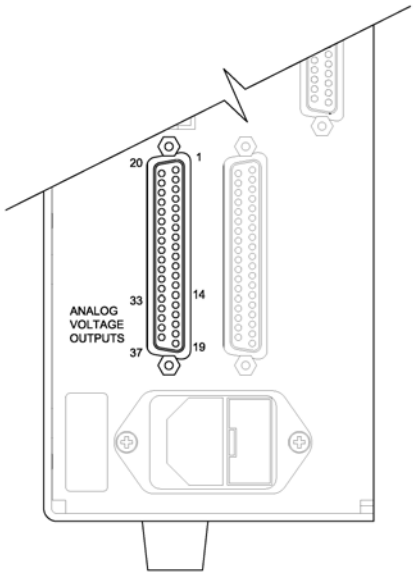

Figure 3–4. Pinout of Rear Panel Connector

Table 3–2. Default Analog Outputs in Single Range Mode

Channel	Connector Pin	I/O Terminal Pin	Description
1	14	1	SO_2 Analog Output
2	33	3	H_2S Analog Output
3	15	5	CS Analog Output
4	34	7	None
5	17	9	None
6	36	11	None
Ground	16, 18, 19, 35, 37	2, 4, 6, 8, 10, 12	Signal Ground

Note All channels are user definable. If any customization has been made to the analog output configuration, the default selections my not apply. ▲

Note If the selective SO_2 scrubber option is installed, the H_2S concentration is sent out the CS analog output and the SO_2 and H_2S analog outputs will always report 0. ▲

Dual Range Mode

In the dual range mode, while in SO_2/CS mode there are two independent analog outputs for each gas. These are labelled simply as the “High Range” and the “Low Range”. Each channel has its own analog output range, averaging time, and span coefficient.

This enables the sample concentration reading to be sent to the analog outputs at two different ranges. For example, the low SO_2 analog output

can be set to output concentrations from 0 to 50 ppb and the high SO_2 analog output set to output concentrations from 0 to 10000 ppb.

In addition, each SO_2 analog output has a span coefficient. There are two span coefficients so that each range can be calibrated separately. This is necessary if the two ranges are not close to one another. For example, the low SO_2 range is set to 0–50 ppb and the high SO_2 range is set to 0–10000 ppb.

By default, in the dual range mode, the analog outputs are arranged on the rear panel connector as shown in **Figure 3–4**. See **Table 3–3** for channels and pin connections. Dual range mode may be selected from the "Range Mode Select" in the "Service Menu", later in this chapter.

Table 3–3. Default Analog Outputs in Dual Range Mode

Channel	Connector Pin	I/O Terminal Pin	Description
1	14	1	SO_2 High Range
2	33	3	SO_2 Low Range
3	15	5	H_2S High Range
4	34	7	H_2S Low Range
5	17	9	CS High Range
6	36	11	CS Low Range
Ground	16, 18, 19, 35, 37	2, 4, 6, 8, 10, 12	Signal Ground

Note All channels are user definable. If any customization has been made to the analog output configuration, the default selections may not apply. ▲

Note If the selective SO_2 scrubber option is installed, the H_2S concentration is sent out the CS analog output and the SO_2 and H_2S analog outputs will always report 0. ▲

Auto Range Mode

The auto range mode switches the analog outputs between high and low ranges, depending on the concentration level. The high and low ranges are defined in the Range menu.

For example, suppose the low range is set to 50 ppb and the high range is set to 100 ppb (**Figure 3–5**). Sample concentrations below 50 ppb are output based on low range selection and sample concentrations above 50 ppb are output based on high range selection. When the low range is active, the status output is at 0 volts. When the high range is active, the status output is at half of full-scale.

When the high range is active, the concentration must drop to 95% of the low range for the low range to become active.

In addition, each analog output has a span coefficient. There are two span coefficients so that each range can be calibrated separately. This is necessary if the two ranges are not close to one another. For example, the low range is set to 0–50 ppb and the high range is set to 0–10000 ppb.

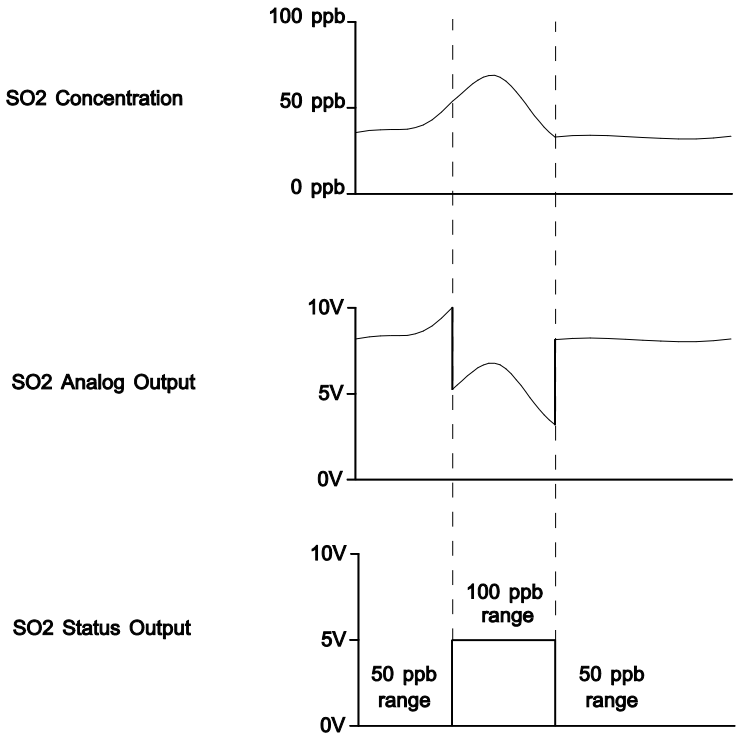

Figure 3–5. Analog Output in Auto Range Mode

By default, in the auto range mode, the analog outputs are arranged on the rear panel connector as shown in **Figure 3–4**. See **Table 3–4** for channels and pin connections. Auto range mode may be selected from "Range Mode Select" in the "Service Menu" later in this chapter.

Table 3–4. Default Analog Outputs in Auto Range Mode

Channel	Connector Pin	I/O Terminal Pin	Description
1	14	1	SO_2 Analog Output
2	33	3	H_2S Analog Output
3	15	5	CS Analog Output
4	34	7	Range Status: half-scale = high range zero scale = low range

Channel	Connector Pin	I/O Terminal Pin	Description
5	17	9	None
6	36	11	None
Ground	16, 18, 19, 35, 37	2, 4, 6, 8, 10, 12	Signal Ground

Note All channels are user definable. If any customization has been made to the analog output configuration, the default selections my not apply. ▲

Note If the selective SO_2 scrubber option is installed, the H_2S concentration is sent out the CS analog output and the SO_2 and H_2S analog outputs will always report 0. ▲

Gas Units

The Gas Units screen defines how the SO_2, H_2S, and CS concentration readings are expressed. Gas units of parts per billion (ppb), parts per million (ppm), or micrograms per cubic meter ($\mu g/m^3$), or milligrams per cubic meter (mg/m^3) are available. The $\mu g/m^3$ and mg/m^3 gas concentration modes are calculated using a standard pressure of 760 mmHg and a standard temperature of 20 °C.

When switching the selected units from ppb or ppm to $\mu g/m^3$ or mg/m^3, the analog ranges all default to the highest range in that mode. For example, when switching from $\mu g/m^3$ to ppb, all the ranges default to 10000 ppb.

Therefore, whenever you change units, you should also check the range settings.

In the Main Menu, choose Range > **Gas Units**.

Note If the units change from ppb or ppm to $\mu g/m^3$ or mg/m^3 or vice versa, the instrument should be re-calibrated, particularly if the user's standard temperature is different from 20 °C. A display warning will appear that ranges will be defaulted and calibration parameters reset. ▲

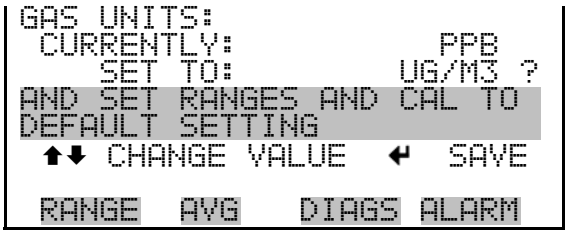

SO_2, H_2S and CS Ranges

The SO_2, H_2S, and CS Ranges screen defines the concentration range of the analog outputs. For example, an SO_2 range of 0–50 ppb restricts the SO_2 analog output to concentrations between 0 and 50 ppb.

The display shows the current SO_2, H_2S, and CS ranges. The next line of the display is used to change the range. The range screen is similar for the single, dual, and auto range modes. The only difference between the screens are the words "High" or "Low" displayed to indicate which range is displayed. The example that follows shows the SO_2 range screen in single mode. For more information about the dual and auto range modes, see "Single Range Mode", "Dual Range Mode", and "Auto Range Mode" earlier in this chapter.

Table 3–5 lists the available standard ranges. **Table 3–6** lists the extended ranges. When switching from standard to extended ranges, the PMT voltage must be readjusted. For more information, about readjusting the PMT voltage, see "PMT Voltage Adjustment" on page 7-23.

In the Main Menu, choose Range > **SO_2, H_2S, or CS Range**.

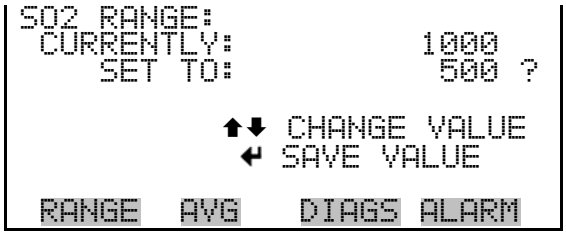

Table 3–5. Standard Ranges

ppb	ppm	µg/m³	mg/m³
50	0.05	200	0.2
100	0.10	500	0.5
200	0.20	1000	1
500	0.50	2000	2
1000	1	5000	5
2000	2	10000	10
5000	5	20000	20
10000	10	25000	25
C1	C1	C1	C1
C2	C2	C2	C2
C3	C3	C3	C3

C1, C2, and C3 are custom ranges. For more information about custom ranges, see "Set Custom Ranges" that follows.

Table 3–6. Extended Ranges

ppb	ppm	µg/m³	mg/m³
500	0.5	2000	2
1000	1	5000	5
2000	2	10000	10
5000	5	20000	20
10000	10	50000	50
20000	20	100000	100
50000	50	200000	200
100000	100	250000	250
C1	C1	C1	C1
C2	C2	C2	C2
C3	C3	C3	C3

Set Custom Ranges

The Set Custom Ranges menu lists three custom ranges: C1, C2, and C3. Custom ranges are user-defined ranges. Any value between 50 ppb (0.05 ppm) and 10000 ppb (10 ppm) can be specified as a range. In the µg/m³ (mg/m³) mode, any value between 200 µg/m³ (0.2 mg/m³) and 25000 µg/m³ (25 mg/m³) can be specified as a range.

In the extended range mode, any value between 500 ppb (0.5 ppm) and 100000 ppb (100 ppm) can be specified as a range. In the µg/m³ (mg/m³) mode, any value between 2000 µg/m³ (2 mg/m³) and 250000 µg/m³ (250 mg/m³) can be specified as a range.

In the Main Menu, choose Range > **Set Custom Ranges**.

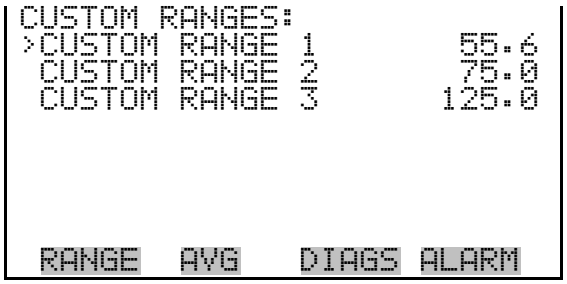

Custom Ranges

The Custom Ranges screen is used to define the custom ranges.

The display shows the current custom range. The next line of the display is used to set the range. To use the custom full-scale range, be sure to select it (Custom range 1, 2, or 3) in the SO_2, H_2S, or CS Range screens. For more information about selecting ranges, see "SO_2, H_2S and CS Ranges" described previously.

In the Main Menu, choose Range > Set Custom Ranges > **Custom Range 1, 2,** or **3**.

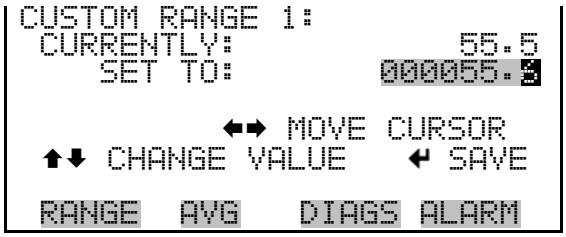

Averaging Time

The Averaging Time defines a time period (60 to 300 seconds) over which SO_2, H_2S, and CS measurements are taken. The average concentration of the readings are calculated for that time period. The front panel display and analog outputs are updated every 60 seconds for averaging times between 60 and 300 seconds. An averaging time of 60 seconds, for example, means that the average concentration of the last 60 seconds will be output at each update. An averaging time of 300 seconds means that the moving average concentration of the last 300 seconds will be output at each update. Therefore, the lower the averaging time the faster the front panel display and analog outputs respond to concentration changes. Longer averaging times are typically used to smooth output data.

The Averaging Time screen for the single range mode is shown below. In the dual and auto range modes, an averaging time menu is displayed before the averaging time screen. This additional menu is needed because the dual and auto range modes have two averaging times (high and low). The averaging time screen functions the same way in the single, dual, and auto range modes. The following averaging times are available: 60, 90, 120, 180, 240, and 300 seconds. Additional averaging times are available in manual SO_2 and CS modes: 1, 2, 5, 10, 20, 30, 60, 90, 120, 180, 240, and 300 seconds. For more information about manual mode, see "Auto/Manual Mode" later in this chapter.

Note In the SO_2/CS (auto switching) mode, the available averaging time ranges are from 60 to 300 seconds to allow for proper purging of the sample cell. ▲

In the Main Menu, choose **Averaging Time**.

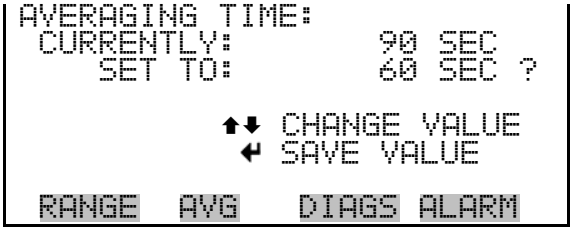

Calibration Factors Menu

Calibration factors are used to correct the SO_2, H_2S, and CS concentration readings that the instrument generates using its own internal calibration data. The Calibration Factors menu displays the calibration factors. The screens that follow show the calibration factors menu in single mode and dual/auto range modes. The only differences between the screens are the words “HI” and “LO” to indicate which range is displayed.

Normally, the instrument is calibrated automatically using the commands listed in the “Calibration Menu” on page 3-19. However, the instrument can also be calibrated manually using the Calibration Factors Menu.

To manually calibrate the instrument, see “SO_2 and CS Background” and “SO_2, H_2S, and CS Span Coefficient” that follows for more information.

In the Main Menu, choose **Calibration Factors**.

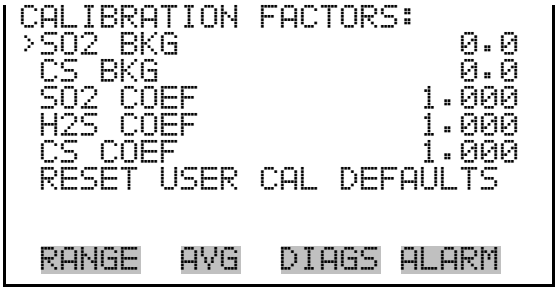

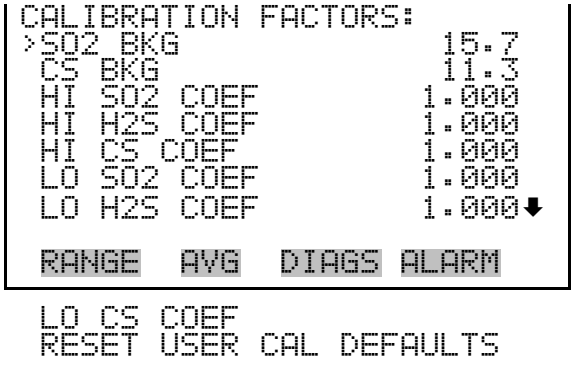

SO_2 and CS Background

The SO_2 and CS background corrections are determined during zero calibration. The SO_2.and CS backgrounds are the amount of signal read by the analyzer in each mode while sampling zero air. Although the background is expressed in terms of concentration, the background signal is actually the combination of electrical noise and scattered light. Before the

analyzer sets the SO_2.and CS readings to zero, it stores these values as the SO_2.and CS background corrections, respectively. The H_2S background correction is determined from the SO_2 and CS, and is not displayed. SO_2 and CS background corrections are typically below 30 ppb.

The SO_2.and CS background screens are used to perform a manual adjustment of the instrument's zero background. Before performing a background calibration, allow the analyzer to sample zero air until stable readings are obtained. The SO_2 and CS background screens operate similarly, so only the SO_2 background screen is shown here. The display shows the current SO_2or CS reading in the currently selected gas units, which is the background reading on zero air. The next line of the display shows the SO_2or CS background correction that will be stored in memory and is being used to correct the SO_2 or CS reading. That is, the SO_2 or CS background correction is subtracted from the SO_2 or CS reading.

In the example that follows, the analyzer is reading 21.4 ppb of SO_2 while sampling zero air. The SO_2 background correction is 0.0 ppb. That is, the analyzer is not applying a zero background correction. The question mark is used as a prompt to change the background correction. In this case the background correction must be increased to 21.4 ppb in order for the SO_2 reading to be at 0 ppb.

To set the SO_2 reading in the example that follows to zero, use [↑] to increment the SO_2 background correction to 21.4 ppb. As the SO_2 background correction reading is increased, the SO_2 concentration is decreased. Press [↵] to actually set the SO_2 reading to 0 ppb and store the new background correction of 21.4 ppb.

In the Main Menu, choose Calibration Factors > **SO2 BKG or CS BKG**.

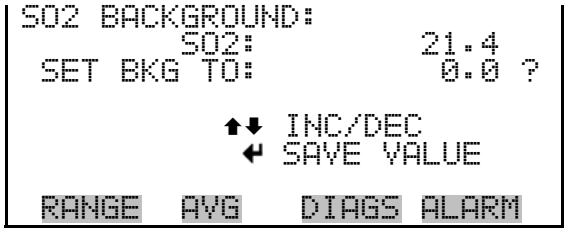

SO_2, H2S and CS Span Coefficients

The SO_2, H_2S, and CS span coefficients are usually calculated by the instrument processor during calibration. The span coefficients are used to correct the SO_2, H_2S, and CS readings. The SO_2 and CS span coefficients normally have values near 1.000. The H_2S span coefficient normally has a value between 0.960 and 1.050.

The SO_2, H_2S, and CS Coefficient screens allow the SO_2, H_2S, and CS span coefficient to be manually changed while sampling span gas of known

concentration. The SO_2, H_2S, and CS Coefficient screens operate the same way and the description of the SO_2 Coefficient screen applies to the H_2S Coefficient and CS Coefficient screens.

The display shows the current SO_2 concentration reading. The next line of the display shows the SO_2 span coefficient that is stored in memory and is being used to correct the SO_2 concentration. Notice that as the span coefficient value is changed, the current SO_2 concentration reading on the above line also changes. However, no real changes are made to the value stored in memory until [↵] is pressed. Only proposed changes, as indicated by a question mark prompt, are displayed until [↵] is pressed.

In dual or auto range modes, "HIGH" or "LOW" is displayed to indicate the calibration of the high or low coefficient.

The example that follows shows the coefficient screen in dual or auto range mode.

Note The concentration value will show ERROR if the measured concentration is not a valid span value (either higher than the selected range, or 0 or lower). ▲

In the Main Menu, choose Calibration Factors > **Hi SO_2 Coef**.

```
HIGH SO2 COEFFICIENT:
    HIGH SO2:          400
 SET COEF TO:        1.000 ?

          ↑↓ INC/DEC
           ↵ SAVE VALUE

 RANGE  AVG   DIAGS ALARM
```

Reset User Calibration Defaults

The Reset User Calibration Defaults screen allows the user to reset the calibration configuration values to factory defaults.

In the Main Menu, choose Calibration Factors > **Reset User Cal Defaults**.

```
RESTORE DEFAULT CAL:

                  ↵ RESTORE



 RANGE  AVG  DIAGS ALARM
```

```
RESTORE DEFAULT CAL:

                  ↵ RESTORE
ARE YOU SURE YOU WANT TO?
PRESS → TO CONFIRM RESTORE

 RANGE  AVG  DIAGS ALARM
```

Calibration Menu

The Calibration menu is used to set the SO_2 and CS backgrounds and the CO_2, H_2S, and CS span coefficients. The calibration menu is similar for the single, dual, and auto range mode as shown below. The dual and auto range modes have two SO_2, H_2S, and CS span factors ("HI" and "LO"). This allows each range to be calibrated separately. This is necessary if the two ranges used are not close to one another. For example, a low SO_2 range of 500 ppb and a high SO_2 range of 10 ppm. The zero/span check menu item is visible only if the zero/span valve option is installed. For more information about calibration, see the "Calibration" chapter.

In the Main Menu, choose **Calibration**.

```
CALIBRATION:
>CAL SO2 BACKGROUND
 CAL CS BACKGROUND
 CAL SO2 COEFFICIENT
 CAL H2S COEFFICIENT
 CAL CS COEFFICIENT
 ZERO/SPAN CHECK

 RANGE  AVG   DIAGS ALARM
```

```
CALIBRATION:
>CAL SO2 BACKGROUND
 CAL CS BACKGROUND
 CAL HI SO2 COEFFICIENT
 CAL HI H2S COEFFICIENT
 CAL HI CS COEFFICIENT
 CAL LO SO2 COEFFICIENT
 CAL LO H2S COEFFICIENT  ⬇
 RANGE  AVG  DIAGS ALARM
```

```
CAL LO CS COEFFICIENT
ZERO/SPAN CHECK
```

Calibrate SO_2 and CS Backgrounds

The Calibrate SO_2 Background and Calibrate CS Background screens are used to automatically adjust the instrument zero or SO_2 or CS background. Before performing a zero calibration, ensure the analyzer samples zero air for at least 5 minutes and the zero value is stable. The display shows the current reading.

It is important to note the averaging time when calibrating. The longer the averaging time, the more accurate the calibration will be. To be most accurate, use the 300-second averaging time. For more information about calibration, see the "Calibration" chapter.

In the Main Menu, choose Calibration > **Cal SO_2 Background**.

```
SO2 BACKGROUND:
      SO2:          25.7
 CURRENTLY:          0.0 ?
        ↵ SET SO2 TO ZERO

 RANGE  AVG   DIAGS ALARM
```

Calibrate SO_2, H2S and CS Coefficients

The Calibrate SO_2, H_2S, and CS Coefficient screens are used to automatically adjust the SO_2, H_2S, and CS coefficients while sampling span gas of a known concentration. The display shows the current concentration reading. The next line of the display is where the span calibration gas concentration is entered. The SO_2, H_2S, and CS calibrate coefficient screens operate the same way and the description of the Calibrate SO_2 screen applies to the Calibrate H_2S and Calibrate CS screens.

It is important to note the averaging time when calibrating. The longer the averaging time, the more accurate the calibration will be. To be most accurate, use the 300-second averaging time. The SO_2 span coefficient is calculated, stored, and used to correct the current SO_2 reading. In dual or auto range modes, "HIGH" or "LOW" is displayed to indicate the calibration of the high or low range coefficient. For more information about calibration, see the "Calibration" chapter.

In the Main Menu, choose Calibration > **Cal SO_2, H_2S, or CS Coefficient**.

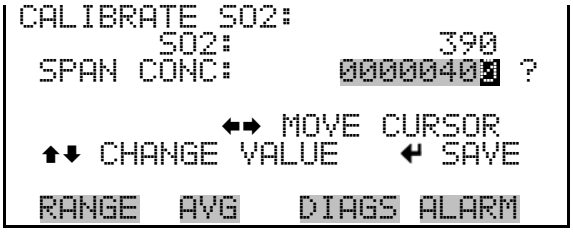

Zero/Span Check

The Zero/Span Check menu is available with the zero/span or dual span valve options. It is used to program the instrument to perform fully automated zero and span checks or adjustments. Total Duration Hr is the sum of zero, span, and purge duration minutes.

Note Zero and Span Calibration Reset are toggle items that change between yes or no when selected, and present only if auto calibration is installed and the instrument is in single range, manual mode. ▲

Note If the dual span option is installed, the automatic span checks and calibrations are performed using SPAN 1 only. ▲

In the Main Menu, choose Calibration > **Zero/Span Check**.

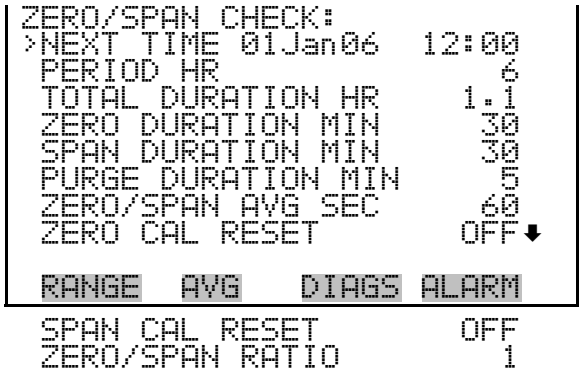

Next Time

The Next Time screen is used to view and set the initial date and time (24-hour format) of the zero/span check. Once the initial zero/span check is performed, the date and time of the next zero/span check is calculated and displayed.

In the Main Menu, choose Calibration > Zero/Span Check > **Next Time**.

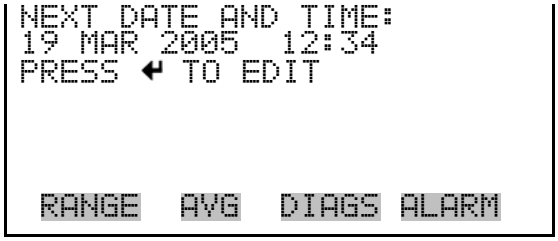

Period Hours

The Zero/Span Period Hours screen defines the period or interval between zero/span checks. Periods between 0 and 999 hours are acceptable. To turn the zero/span check off, set the period to 0.

In the Main Menu, choose Calibration > Zero/Span Check > **Period HR**.

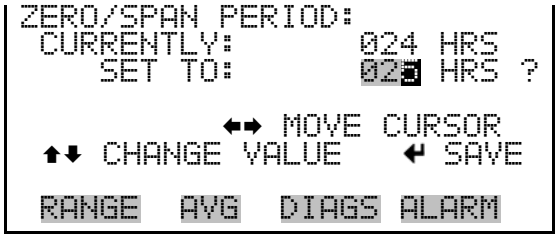

Zero/Span/Purge Duration Minutes

The Zero Duration Minutes screen defines how long zero air is sampled by the instrument. The span and purge duration screens look and functions the same way as the zero duration screen, and are used to set how long the

span gas and sample gas are sampled by the instrument. Durations between 0 and 99 minutes are acceptable. Each time a zero/span check occurs the zero check is done first, followed by the span check. To perform just a zero check, set the span and purge duration screens to 0 (off). The same applies to perform just a span or purge check.

In the Main Menu, choose Calibration > Zero/Span Check > **Zero, Span** or **Purge Duration Min**.

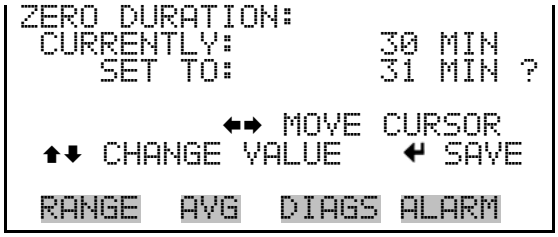

Zero/Span Averaging Time

The Zero/Span Averaging Time screen allows the user to adjust the zero/span averaging time. The zero/span averaging time is used by the analyzer only when performing an automatic zero, or span check or calibration. The analyzer's averaging time is used for all other functions. The following averaging times are available: 1, 2, 5, 10, 20, 30, 60, 90, 120, 180, 240, and 300 seconds (in auto SO_2/CS mode, only 60, 90, 120, 180, 240, and 300 seconds are available).

In the Main Menu, choose Calibration > Zero/Span Check > **Zero/Span Avg Sec**.

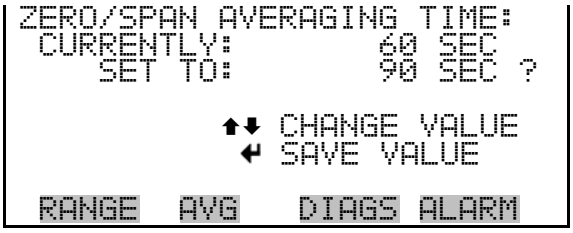

Zero/Span Ratio

The Zero/Span Ratio screen is used to adjust the ratio of zeros to spans. For example, if this value is set to 1, a span check will follow every zero check. If this value is set to 3, there will be two zero checks between each zero/span check. This value may be set from 1 to 10, with 1 as default.

In the Main Menu, choose Calibration > Zero/Span Check > **Zero/Span Ratio**.

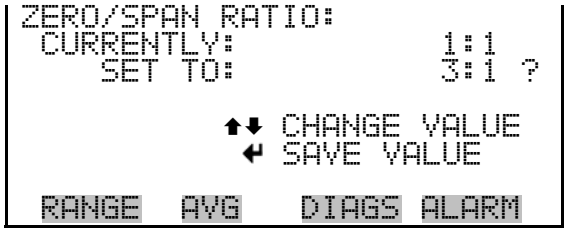

Instrument Controls Menu

The Instrument Controls menu contains a number of items. The software controls listed in this menu enable control of the listed instrument functions.

In the Main Menu, choose **Instrument Controls**.

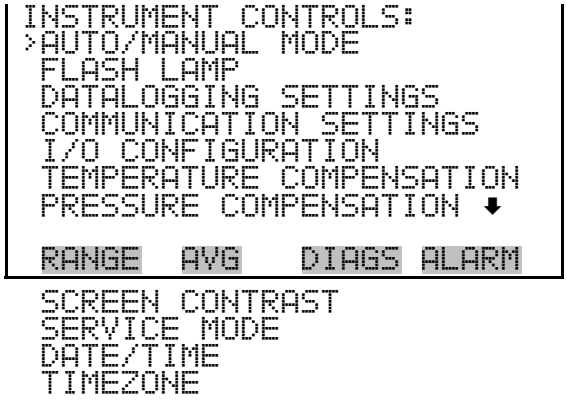

Auto/Manual Mode

The Auto/Manual Mode screen allows selection of the automatic mode (SO_2/CS), SO_2 mode (manual SO_2), or CS mode (manual CS). The auto cycle mode switches the mode solenoid valve automatically on a 60 second cycle so that SO_2, H_2S, and CS concentrations are determined. The manual SO_2 mode puts the mode solenoid valve into the SO_2 position. Therefore, only the SO_2 concentration is determined. The manual CS mode puts the mode solenoid valve into the CS position. Therefore, only the CS concentration is determined. In the manual modes, additional averaging times of 1, 2, 5, 10, 20, and 30 seconds are available from the Averaging Times screen.

In the Main Menu, choose Instrument Controls > **Auto/Manual Mode**.

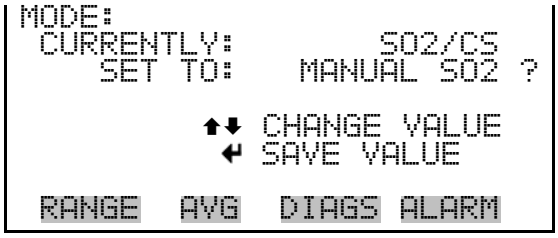

Flash Lamp

The Flash Lamp screen is used to turn the flash lamp on or off. The flash lamp must be off when using the optical span test LED. For more information about the optical span test LED, see "Optical Span Test" later in this chapter.

In the Main Menu, choose Instrument Controls > **Flash Lamp**.

Datalogging Settings

The *i*Series instruments include a built-in data logging capability as a standard feature. The operator is allowed to create two different types of records, which for historical reasons are named lrecs and srecs. Each record can contain up to 32 different fields or data items, and records can be created at user-defined intervals ranging from 1 to 60 minutes.

Record generation is tied to the instrument's real-time clock. For example, if the logging period for srecs is set to 30 minutes, a new srec will be generated on every hour and every half hour (10:00, 10:30, 11:00 …). Lrecs and srecs can be interleaved. For example, an srec containing just the current concentration level could be generated every five minutes while an lrec containing a full set of diagnostic data could be generated once every hour.

The analyzer's computer system includes three megabytes of flash memory which is enough to store a full lrec containing 32 data items and a full srec containing 32 items once each minute for a week (>20,000 total records). If logging is limited to the minimum content of date, time, concentration and error flags, the analyzer can store data once each minute for four months (>190,000 records).

In the Main Menu, choose Instrument Controls > **Datalogging Settings**.

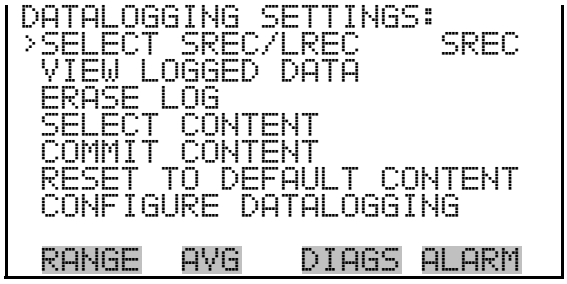

Select SREC/LREC

The Select SREC/LREC is used to select short record or long record format for other operations in this menu.

In the Main Menu, choose Instrument Controls > Datalogging Settings > **Select SREC/LREC**.

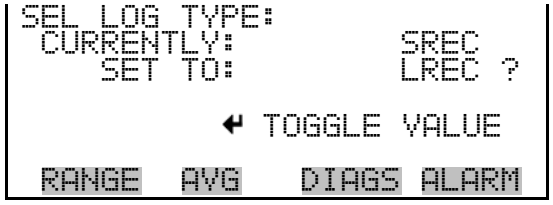

View Logged Data

The View Logged Data screen is used to select the start point to view the logged data by number or records or date and time.

In the Main Menu, choose Instrument Controls > Datalogging Settings > Select SREC or LREC > **View Logged Data**.

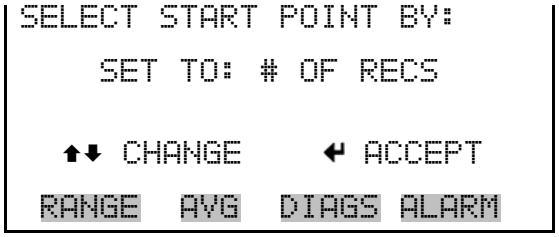

Number of Records

The Number of Records screen is used to select the number of records to view, ending with the most recent. It also shows the total number of records that have been logged.

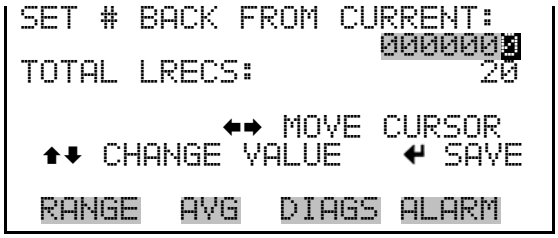

The Record Display screen (read only) displays the selected records.

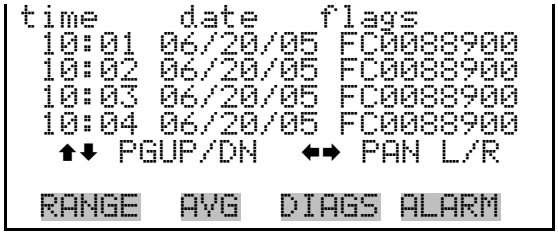

Date and Time The Date and Time screen is used to set a start date and time for which to view logged data. For example, if "20 JUN 2005 10:00" is entered, then the first logged data record that is displayed is the first record after this time. If set to one minute logging, this would be at "20 JUN 2005 10:01".

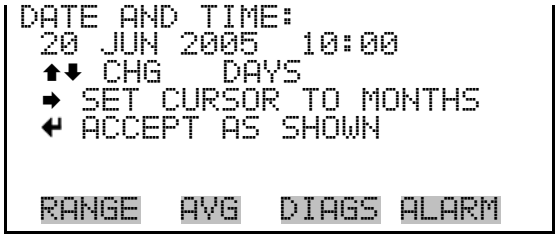

Record Display The Record Display screen (read only) displays the selected records.

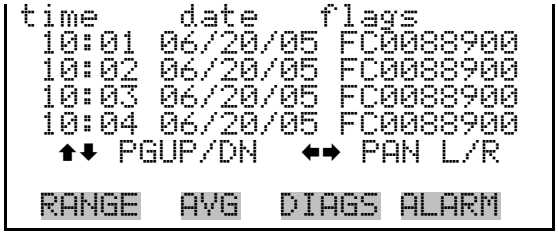

Erase Log

The Erase Log screen is used to erase all saved data for the selected record type only (not both short records and long records).

In the Main Menu, choose Instrument Controls > Datalogging Settings > **Erase Log**.

Select Content

The Select Content submenu displays a list of 32 record fields to use. When a field is selected, a submenu list appears of the analog output signal group choices to choose from. Choices are Concentrations, Other Measurements, and Analog Inputs (if the I/O expansion board is installed). This is a temporary list of items for the selected record type that must be committed via the datalogging menu before the changes will apply. Note that committing any changes to this list will erase all currently logged data, as the format of the stored data is changed.

In the Main Menu, choose Instrument Controls > Datalogging Settings > **Select Content**.

Choose Item Type

The Choose Item Type submenu is a list of the type of data that can be logged for the current field. Choices are Concentrations, Other Measurements, and Analog Inputs (if the I/O expansion board is installed).

In the Main Menu, choose Instrument Controls > Datalogging Settings > Select Content > **Field 1-32**.

Note The ANALOG INPUTS item is only displayed if the I/O Expansion Board option is installed. ▲

Concentrations

The Concentrations screen allows the user to select the output signal that is tied to the selected field item. The selected item is shown by "<--" after it. Note that at this point, pressing [↵] indicates that these are proposed changes as opposed to implemented changes. To change the selected record format and erase record log file data, see "Commit Content" that follows. Range Status is visible only in auto range mode.

In the Main Menu, choose Instrument Controls > Datalogging Settings > Select Content > Select Field > **Concentrations**.

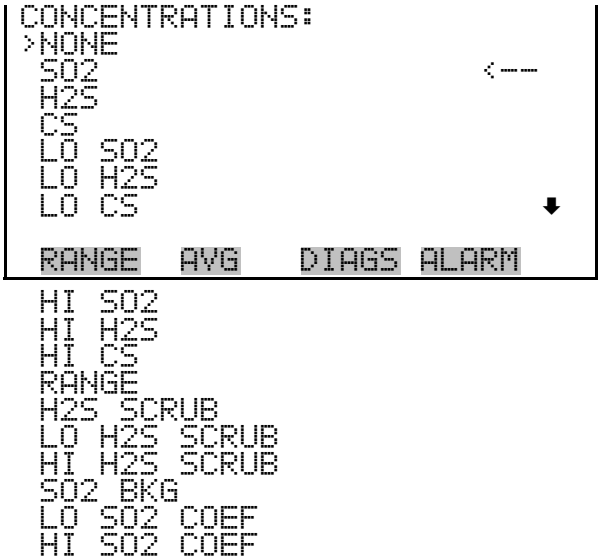

Other Measurements

The Other Measurements screen allows the user to select the output signal that is tied to the selected field item. The selected item is shown by "<--"

after it. Items displayed are determined by the options installed. Note that at this point, pressing [↵] indicates that these are proposed changes as opposed to implemented changes. To change the selected record format and erase record log file data, see "Commit Content" that follows.

In the Main Menu, choose Instrument Controls > Datalogging Settings > Select Content > Select Field > **Other Measurements**.

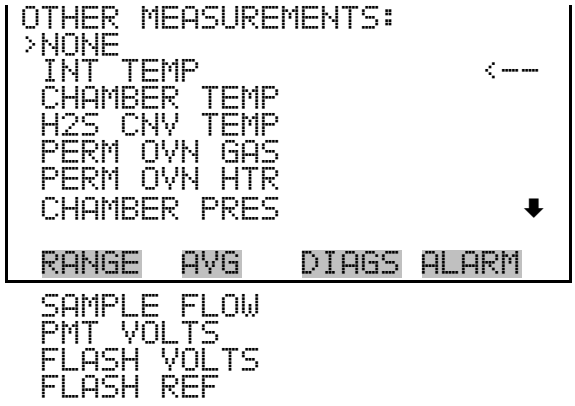

Analog Inputs

The Analog Inputs screen allows the user to select the parameter (none or analog inputs 1-8) that is tied to the selected field item. The selected item is shown by "<--" after it. Note that at this point, pressing [↵] indicates that these are proposed changes as opposed to implemented changes. To change the selected record format and erase record log file data, see "Commit Content" that follows.

In the Main Menu, choose Instrument Controls > Datalogging Settings > Select Content > Select Field > **Analog Inputs**.

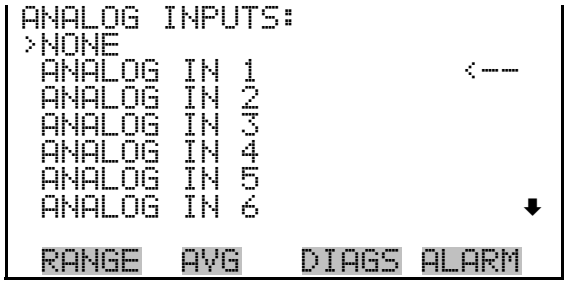

Commit Content

The Commit Content screen is used to save any changes that have been made to any of the record fields for the selected record type. If no changes have been made "NO CHANGES TO RECORD LIST!" will appear. For more information about selecting the content of logged data fields, see "Select Content" in this chapter.

In the Main Menu, choose Instrument Controls > Datalogging Settings > **Select Content**.

Reset to Default Content

The Reset to Default Content screen is used to reset all of the datalogging field items to default values for the selected record type. For more information about selecting the content of logged data fields, see "Select Content" described previously.

In the Main Menu, choose Instrument Controls > Datalogging Settings > **Reset to Default Content**.

Configure Datalogging

The Configure Datalogging menu deals with datalogging configuration for the currently selected record type.

In the Main Menu, choose Instrument Controls > Datalogging Settings > **Configure Datalogging**.

Logging Period Min

The Logging Period Min screen is used to select the logging period in minutes for the record format (srec or lrec). List of choices include: off, 1, 5, 15, 30, and 60 minutes (default).

In the Main Menu, choose Instrument Controls > Datalogging Settings > Configure Datalogging > **Logging Period Min**.

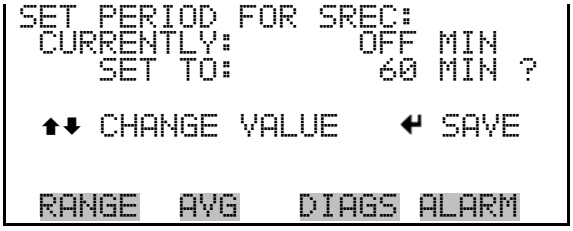

Memory Allocation Percent

The Memory Allocation Percent screen is used to select the percentage of memory used by each record type. Percentages between 0 and 100% are available in increments of 10. Changing this value results in log erasure for both types of records.

In the Main Menu, choose Instrument Controls > Datalogging Settings > Configure Datalogging > **Memory Allocation %**.

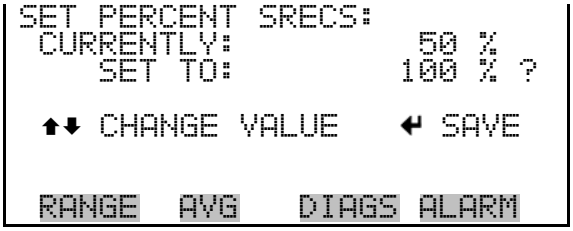

Data Treatment

The Data Treatment screen is used to select the data type for the selected record type: whether the data should be averaged over the interval, the minimum or maximum measured during the interval, or the current value (last value measured). Data treatment doesn't apply to all data, just to the concentration measurement. All other data points log the current value at the end of the interval.

In the Main Menu, choose Instrument Controls > Datalogging Settings > Configure Datalogging > **Data Treatment**.

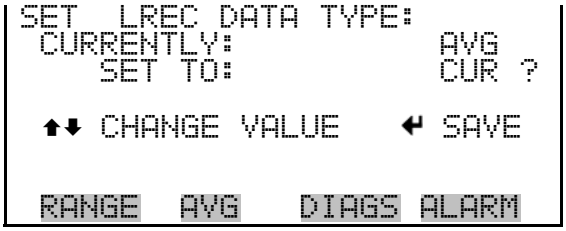

Communication Settings

The communication Settings menu is used with communications control and configuration.

In the Main Menu, choose Instrument Controls > **Communication Settings**.

Serial Settings

The Serial Settings screen is used for serial communications control and configuration.

In the Main Menu, choose Instrument Controls > Communication Settings > **Serial Settings**.

Baud Rate

The Baud Rate screen is used to set the RS-232/RS485 interface baud rate. Baud rates of 1200, 2400, 4800, 9600, 19200, 38400, 57600 and 115200 are available. The analyzer's default baud rate is set to 9600 to provide backwards compatibility with the older C-series analyzers.

In the Main Menu, choose Instrument Controls > Communication Settings > Serial Settings > **Baud Rate**.

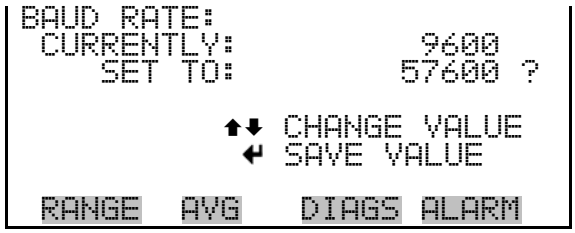

Data Bits The Data Bits Screen is used to set the number of serial data bits. Selections of 7 or 8 are available (defaults to 8).

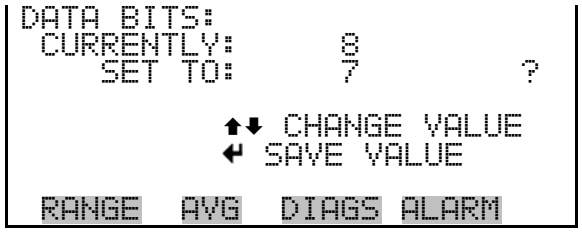

Parity The Parity screen is used to select the parity bit for the serial port. Selections of NONE, EVEN, or ODD are available (defaults to NONE).

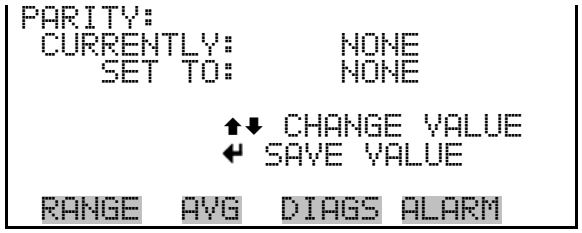

Stop Bits The Stop Bits screen is used to select the number of stop bits for the serial port. Selections of 1 and 2 are available (defaults to 1).

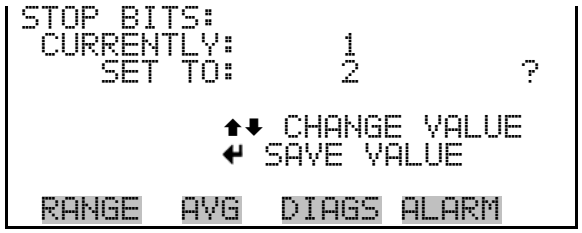

RS-232/RS-485 Selection

The RS-232/RS-485 Selection screen allows the user to choose between the RS-232 or RS-485 specification for serial communication.

Equipment Damage Disconnect the serial cable before changing RS-232 and RS-485 selection to prevent damage to any equipment currently connected to the instrument. ▲

In the Main Menu, choose Instrument Controls > Communication Settings > Serial Settings > **RS-232/RS-485 Selection**.

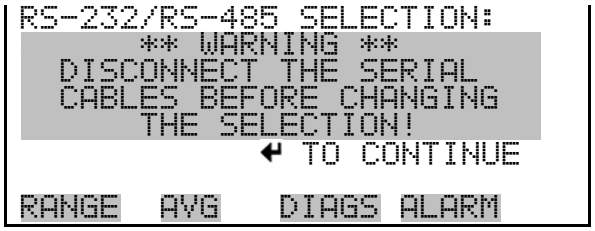

Instrument ID

The Instrument ID screen allows the operator to edit the instrument ID. The ID is used to identify the instrument when using the C-Link or MODBUS protocols to control the instrument or collect data. It may be necessary to edit the ID number if two or more of the same instruments are connected to one computer. Valid Instrument ID numbers are from 0 to 127. The Model 450*i* has a default Instrument ID of 45. For more information about the Instrument ID, see Appendix B “C-Link Protocol Commands” or Appendix C “MODBUS Protocol”.

In the Main Menu, choose Instrument Controls > Communication Settings > **Instrument ID**.

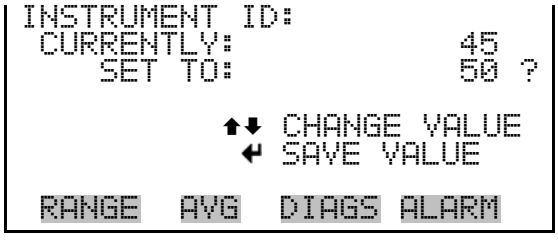

Communication Protocol

The Communication Protocol screen is used to change the instrument communication protocol for serial communications.

In the Main Menu, choose Instrument Controls > Communication Settings > **Communication Protocol**.

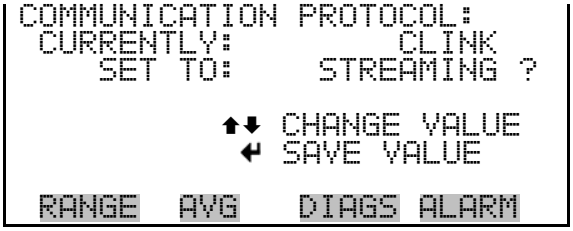

Streaming Data Configuration

The Streaming Data Configuration menu is used to allow for configuration of the 8 streaming data output items, streaming interval, current data format, and current timestamp setting. The Choose Item Signal submenu displays a list of the analog output signal group choices to choose from. Choices are Concentrations, Other Measurements, and Analog Inputs (if the I/O expansion board option is installed).

Note Add Labels, Prepend Timestamp, and Add Flags are toggle items that change between yes or no when selected. ▲

Note The selected item list is different depending on the AUTO/MANUAL MODE and RANGE MODE settings. Changing either of these settings will produce a different set of streaming data items. If either of these modes is going to be changed on a regular basis, then the user must configure each set of data separately after changing the modes to each setting. ▲

In the Main Menu, choose Instrument Controls > Communication Settings > **Streaming Data Config**.

Streaming Data Interval

The Streaming Data Interval screen is used to adjust the streaming data interval. The following interval times are available: 1, 2, 5, 10, 20, 30, 60, 90, 120, 180, 240, and 300 seconds.

In the Main Menu, choose Instrument Controls > Communication Settings > Streaming Data Config > **Interval**.

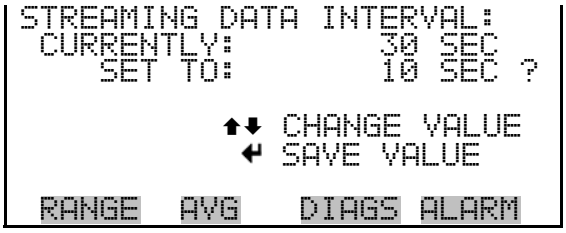

Choose Item Signal

The Choose Signal screen displays a submenu list of the analog output signal group choices. Group choices are Concentrations, Other Measurements, and Analog Inputs (if the I/O expansion board is installed).

In the Main Menu, choose Instrument Controls > Communication Settings > Streaming Data Config > **Item 1-8**.

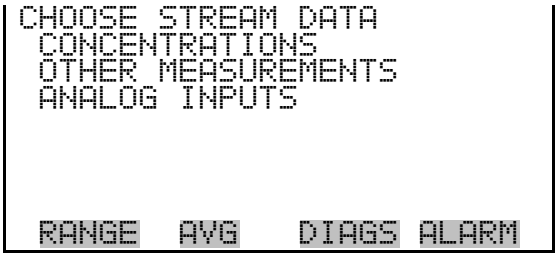

Concentrations

The Concentrations screen allows the user to select the output signal that is tied to the selected streaming data item. The selected item is shown by "<--" after it. In dual or auto range mode, "HI" or "LO" is displayed to indicate high or low range concentrations. Range is visible only in auto range mode.

In the Main Menu, choose Instrument Controls > Communication Settings > Streaming Data Config > Select Item > **Concentrations**.

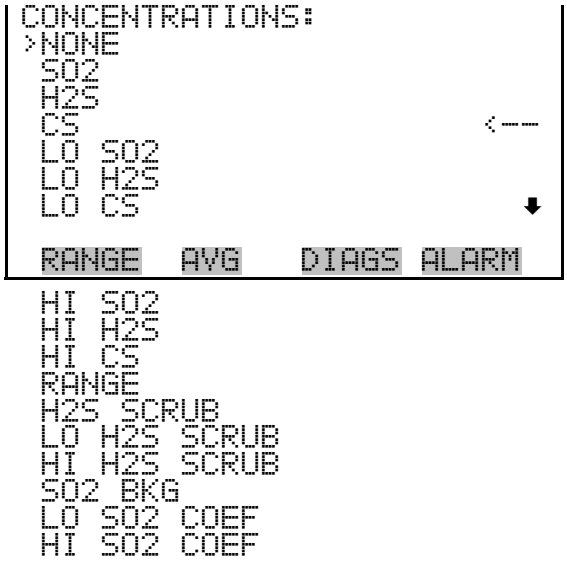

Other Measurements

The Other Measurements screen allows the user to select the output signal that is tied to the selected streaming data item. The selected item is shown by "<--" after it. Items displayed are determined by the options installed.

In the Main Menu, choose Instrument Controls > Communication Settings > Streaming Data Config > Select Item > **Other Measurements**.

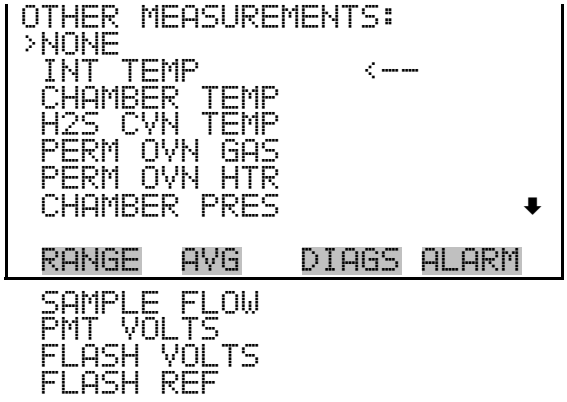

Analog Inputs

The Analog Inputs screen allows the user to select the analog input signal (none or analog inputs 1-8) that is tied to the selected streaming data item. The selected item is shown by "<--" after it.

In the Main Menu, choose Instrument Controls > Communication Settings > Streaming Data Config > Select Item > **Analog Inputs**.

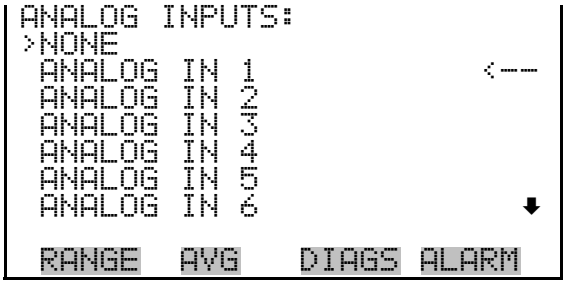

TCP/IP Settings

The TCP/IP Settings menu is used for defining TCP/IP settings.

Note The instrument power must be cycled after any of these parameters have been changed for the change to take effect. ▲

In the Main Menu, choose Instrument Controls > Communication Settings > **TCP/IP Settings**.

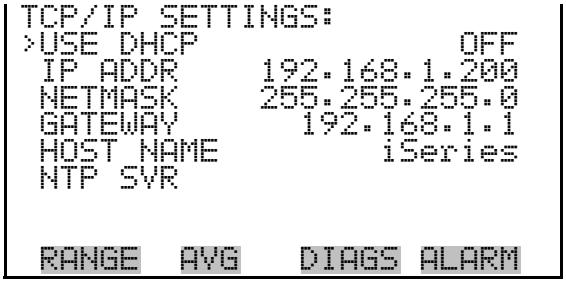

Use DHCP

The Use DHCP screen is used to specify whether to use DHCP or not. When DHCP is enabled, the network dynamically provides an IP address for the instrument.

In the Main Menu, choose Instrument Controls > Communication Settings > TCP/IP Settings > **Use DCHP**.

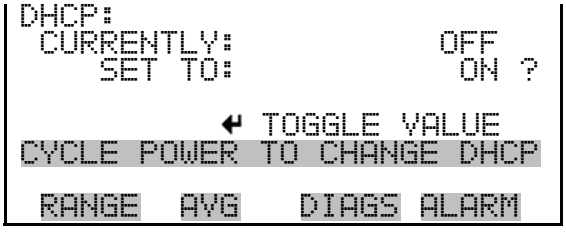

IP Address

The IP Address screen is used to edit the IP address. The IP address can only be changed when DHCP is OFF. For more information on DHCP, see "Use DHCP".

In the Main Menu, choose Instrument Controls > Communication Settings > TCP/IP Settings > **IP Address.**

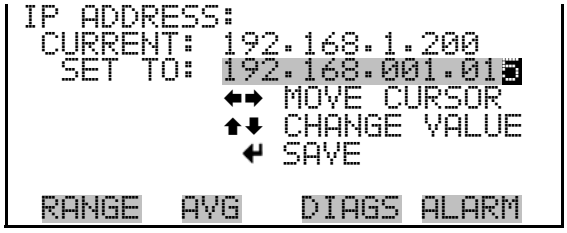

Netmask

The Netmask screen is used to edit the netmask. The netmask is used to determine the subnet for which the instrument can directly communicate to other devices on. The netmask can only be changed when DHCP is OFF. For more information on DHCP, see "Use DHCP" in this chapter.

In the Main Menu, choose Instrument Controls > Communication Settings > TCP/IP Settings > **Netmask**.

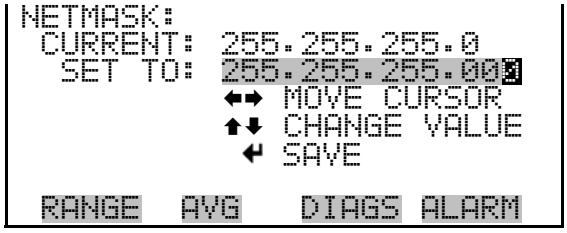

Default Gateway

The Default Gateway screen is used to edit the gateway address. The default gateway can only be changed when DHCP is OFF. For more information on DHCP, see "Use DHCP" in this chapter. Any traffic to addresses that are not on the local subnet will be routed through this address.

In the Main Menu, choose Instrument Controls > Communication Settings > TCP/IP Settings > **Gateway**.

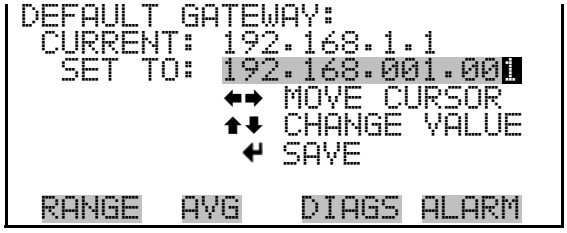

Host Name

The host name screen is used to edit the host name. When DHCP is enabled, this name is reported to the DHCP server.

In the Main Menu, choose Instrument Controls > Communication Settings > TCP/IP Settings > **Host Name**.

Network Time Protocol Server

The Network Time Protocol (NTP) Server screen is used to edit the IP address of the NTP server. More information about the NTP servers and a list of public servers may be found at http://www.ntp.org.

In the Main Menu, choose Instrument Controls > Communication Settings > TCP/IP Settings > **NTP Server**.

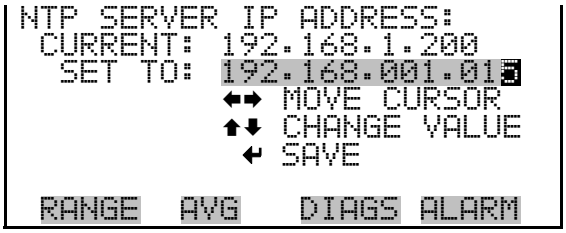

I/O Configuration

The I/O Configuration menu deals with configuration of the analyzer's I/O system. The analog input configuration is displayed only if the I/O expansion board option is installed.

Note The digital outputs may take up to one second after the assigned state occurs to show up on the outputs. ▲

In the Main Menu, choose Instrument Controls > **I/O Configuration**.

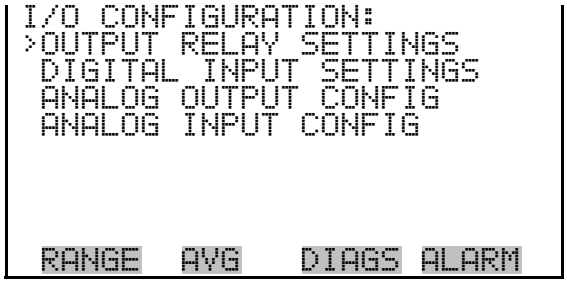

Output Relay Settings

The Output Relay Settings menu displays a list of the 10 digital output relays available, and allows the user to select the instrument parameter or logic state to change for the relay selected.

In the Main Menu, choose Instrument Controls > I/O Configuration > Output Relay Settings > **1-10**.

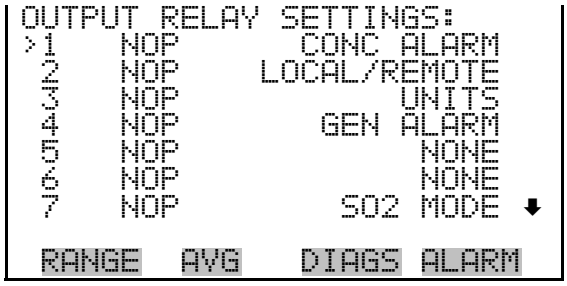

Logic State

The Logic State screen is used to change the I/O relay to either normally open or normally closed.

Press [↵] to toggle and set the logic state between open and closed.

Instrument State

The Instrument State submenu allows the user to select the instrument state that is tied to the selected relay output. A submenu lists signal types of either alarm and non-alarm to choose from.

In the Main Menu, choose Instrument Controls > I/O Configuration > Output Relay Settings > Select Relay > **Instrument State**.

Alarms The Alarms status screen allows the user to select the alarm status for the selected relay output. The selected item is shown by "<--" after it. The I/O BD STATUS alarm is only present if the I/O expansion board is installed. ZERO CHK/CAL and SPAN CHK/CAL are only present if autozero/span check is enabled.

In the Main Menu, choose Instrument Controls > I/O Configuration > Output Relay Settings > Select Relay > Instrument State > **Alarms**.

CS CONC MIN
INT TEMP
CHAMB TEMP
CONV TEMP
PGAS TEMP
PRESSURE
SAMPLE FLOW
FLASH REF
FLASH VOLTS
MB STATUS
MIB STATUS
I/O BD STATUS
CONC ALARM
ZERO CHK/CAL
SPAN CHK/CAL

Non-Alarm The Non-Alarm status screen allows the user to select the non-alarm status for the selected relay output. The selected item is shown by "<--" after it.

"ZERO MODE", "SPAN MODE", "SAMPLE MODE", and "PURGE MODE" are only displayed if the zero/span option is installed. If the dual span option is installed then "SPAN 1 MODE" and "SPAN 2 MODE" are displayed instead of "SPAN MODE".

In the Main Menu, choose Instrument Controls > I/O Configuration > Output Relay Settings > Relay 1-10 > Instrument State > **Non-Alarm**.

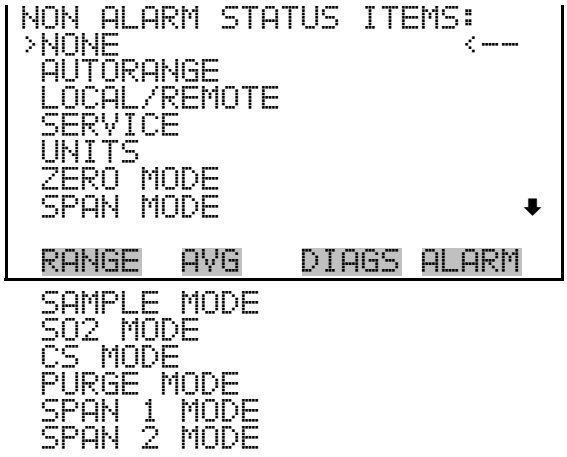

Note Not all of the I/O available in the instrument are brought out on the supplied terminal board, if more I/O is desired, an alternative means of connection is required. ▲

Digital Input Settings

The Digital Input Settings menu displays a list of the 16 digital inputs available, and allows the user to select the instrument parameter or logic state to change for the relay selected.

Note The digital inputs must be asserted for at least one second for the action to be activated. ▲

Note Not all of the I/O available in the instrument are brought out on the supplied terminal board, if more I/O is desired, an alternative means of connection is required. ▲

In the Main Menu, choose Instrument Controls > I/O Configuration > **Digital Input Settings**.

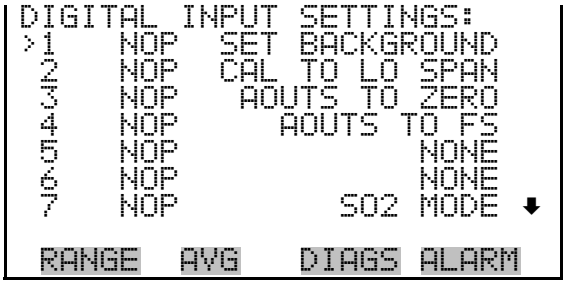

Logic State

The Logic State screen is used to change the I/O relay to either normally open or normally closed. The default state is open, which indicates that a relay connected between the digital input pin and ground is normally open and closes to trigger the digital input action. If nothing is connected to the digital input pin, the state should be left at open to prevent the action from being triggered.

Press [↵] to toggle and set the logic state open or closed.

Instrument Action

The Instrument Action screen allows the user to select the instrument state that is tied to the selected digital input. "ZERO MODE" and "SPAN MODE" are only displayed if the zero/span option is installed. If the dual span option is installed then "SPAN 1 MODE" and "SPAN 2 MODE" are displayed instead of "SPAN MODE".

In the Main Menu, choose Instrument Controls > I/O Configuration > Digital Input Settings > Select Relay > **Instrument Action**.

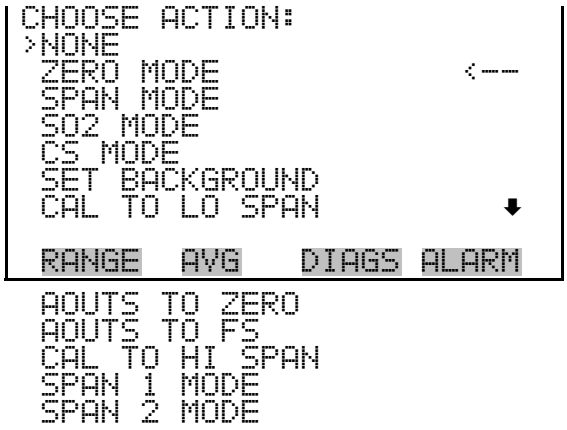

Analog Output Configuration

The Analog Output Configuration menu displays a list of the analog output channels available for configuration. Channel choices include all voltage channels, all current channels, voltage channels 1-6, and current channels 1-6 (if the I/O expansion board option is installed). Configuration choices include selecting range, setting minimum/maximum values, and choosing signal to output.

Note The settings are different depending on the AUTO/MANUAL MODE and RANGE MODE settings. Changing either of these settings will produce a different set of analog output data items. If either of these modes are going to be changed on a regular basis, then the user must configure each set of data separately after changing the modes to each setting. ▲

In the Main Menu, choose Instrument Controls > I/O Configuration > **Analog Output Config**.

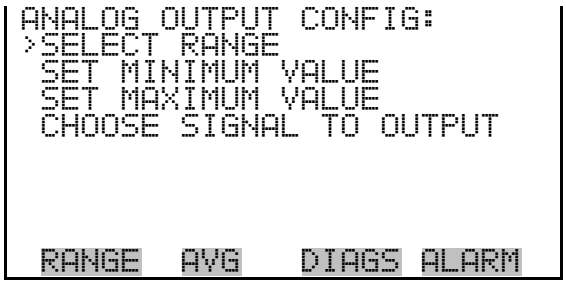

Allow Over/Under Range

The Allow Over/Under Range screen is used to select whether or not the analog outputs are allowed to exceed the maximum selected value of 100

mV, 1 V, 5 V, 10 V, or 20 mA or the minimum selected value of 0 V, 0 mA, or 4 mA. By default this parameter is set to on, and 5% over and under range is allowed for all analog output channels.

In the Main Menu, choose Instrument Controls > I/O Configuration > Analog Output Config > **Allow Over/Under Range**.

Select Output Range

The Select Output Range screen is used to select the hardware range for the selected analog voltage output channel. Possible ranges for the voltage outputs are: 0-100 mV, 0-1, 0-5, 0-10 V.

In the Main Menu, choose Instrument Controls > I/O Configuration > Analog Output Config > Select Channel > **Select Range**.

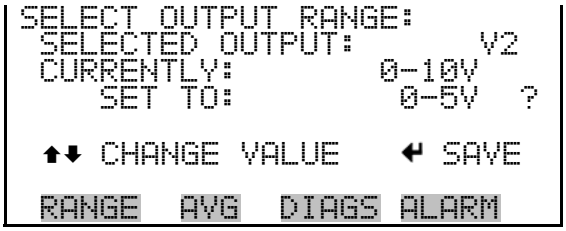

Minimum and Maximum Value

The Minimum Value screen is used to edit the zero (0) to full-scale (100) value in percentages for the selected analog output channel. See **Table 3–7** for a list of choices. In dual or auto range mode, “HI” or “LO” is displayed to indicate high or low concentrations. Range Status is visible only in auto range mode. The minimum and maximum output value screens function the same way. The example that follows shows the set minimum value screen.

In the Main Menu, choose Instrument Controls > IO Configuration > Analog Output Config > Select Channel > **Set Minimum Value** or **Set Maximum Value**.

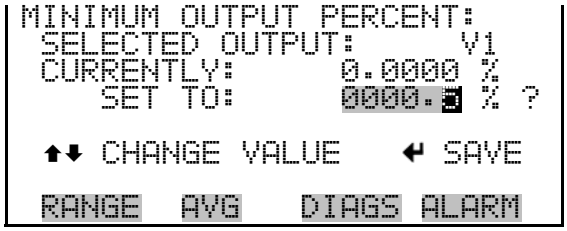

Table 3–7. Analog Output Zero to Full Scale Values

Output	Zero % Value	Full-Scale 100% Value
SO2	Zero (0)	Range Setting
H2S	Zero (0)	Range Setting
CS	Zero (0)	Range Setting
LO SO2	Zero (0)	Range Setting
LO H2S	Zero (0)	Range Setting
LO CS	Zero (0)	Range Setting
HI SO2	Zero (0)	Range Setting
HI H2S	Zero (0)	Range Setting
HI CS	Zero (0)	Range Setting
Range	Changing the setting for this output is not recommended	
Internal Temp	User-set alarm min value	User-set alarm max value
Chamber Temp	User-set alarm min value	User-set alarm max value
Perm Oven Gas Temp	Perm Oven Gas alarm min value	Perm Oven Gas alarm max value
Perm Oven Heater Temp	Perm Oven Heater alarm min value	Perm Oven Heater alarm max value
Pressure	User-set alarm min value	User-set alarm max value
Sample Flow	User-set alarm min value	User-set alarm max value
PMT Volts	700 volts	1100 volts
Flash Voltage	User-set alarm min value	User-set alarm max value
Flash Reference	User-set alarm min value	User-set alarm max value
Everything Else	0 units	10 units

Choose Signal To Output

The Choose Signal To Output screen displays a submenu list of the analog output signal group choices. Group choices are Concentrations, Other Measurements, and Analog Inputs (if the I/O expansion board is installed). This allows the user to select the output signal to the selected output channel. In dual or auto range mode, “HI” or “LO” is displayed to indicate high or low concentrations. Range is visible only in auto range mode. The

Concentrations screen is shown below. See **Table 3–8** that follows for a list of items for each signal group choice.

Note The selected item list is different depending on the AUTO/MANUAL MODE and RANGE MODE settings. Changing either of these settings will produce a different set of analog output data items. If either of these modes are going to be changed on a regular basis, then the user must configure each set of data separately after changing the modes to each setting. ▲

In the Main Menu, choose Instrument Controls > I/O Configuration > Analog Output Config > Select Channel > **Choose Signal To Output**.

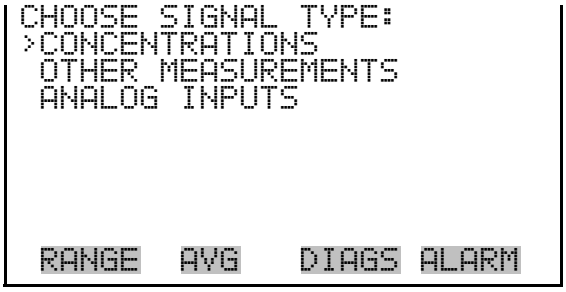

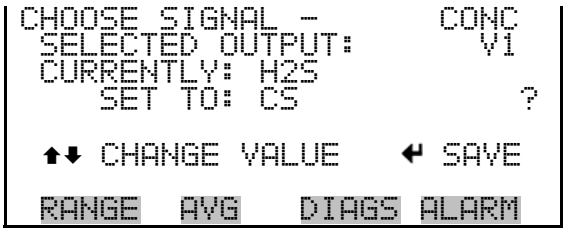

Table 3–8. Signal Types Group Choices

Concentrations	Other Measurements	Analog Inputs
None	None	None
SO2 (single/auto range)	Internal Temperature	Analog Input 1 (if I/O Expansion Board installed
H2S (single/auto range)	Chamber Temperature	Analog Input 2 (if I/O Expansion Board installed
CS (single/auto range)	H2S Converter Temperature	Analog Input 3 (if I/O Expansion board installed)
LO SO2	Perm Oven Gas (if	Analog Input 4

Concentrations	Other Measurements	Analog Inputs
(dual range)	perm oven installed)	(if I/O Expansion board installed)
LO H2S (dual range)	Perm Oven Heater (if perm oven installed)	Analog Input 5 (if I/O Expansion board installed)
LO CS (dual range)	Chamber Pressure	Analog Input 6 (if I/O Expansion board installed)
HI SO2 (dual range)	Sample Flow	Analog Input 7 (if I/O Expansion board installed)
HI H2S (dual range)	PMT Volts	Analog Input 8 (if I/O Expansion board installed)
HI CS (dual range)	Flash Volts	
Range Status (auto range)	Flash Ref	
SO2 BKG		
LO SO2 COEF		
HI SO2 COEF		

Analog Input Configuration

The Analog Input Configuration menu displays a list of the 8 analog input channels available for configuration. This screen is only displayed if the I/O expansion board option is installed. Configuration includes entering descriptor, units, decimal places, and choice of 2-10 table points, and corresponding number of points selected.

In the Main Menu, choose Instrument Controls > I/O Configuration > **Analog Input Config**.

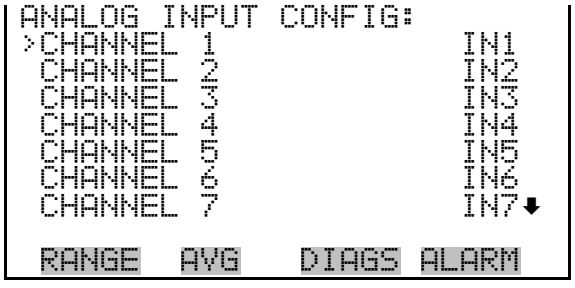

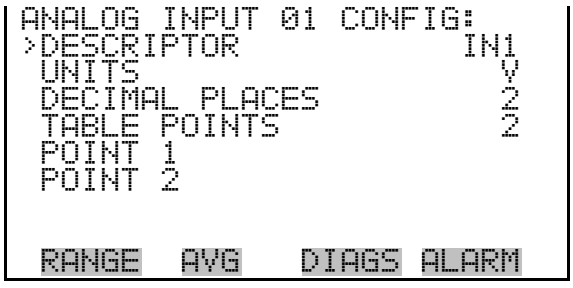

Descriptor

The Descriptor screen allows the user to enter the descriptor for the selected analog input channel. The descriptor is used in datalogging and streaming data to report what data is being sent out. The descriptor may be from 1 to 3 characters in length, and defaults to IN1to IN8 (user input channel number).

In the Main Menu, choose Instrument Controls > I/O Configuration > Analog Input Config > Select Channel > **Descriptor**.

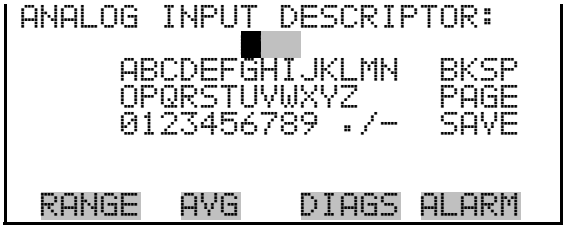

Units The Units screen allows the user to enter the units for the selected analog input channel. The units are displayed on the diagnostic screen and in datalogging and streaming data. The units may be from 1 to 3 characters in length, and defaults to V (volts).

In the Main Menu, choose Instrument Controls > I/O Configuration > Analog Input Config > Select Channel > **Units**.

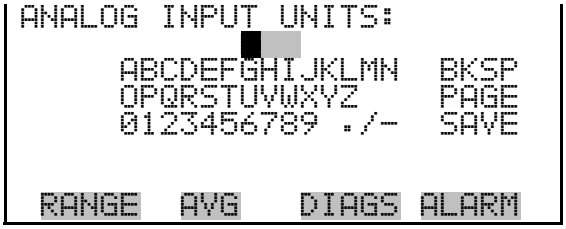

Decimal Places The Decimal Places screen allows the user to select how many digits are displayed to the right of the decimal, from 0 to 6, with a default of 2.

In the Main Menu, choose Instrument Controls > I/O Configuration > Analog Input Config > Select Channel > **Decimal Places**.

Number of Table Points

The Number of Table Points screen allows the user to select how many points are used in the analog input conversion table. The instrument uses linear interpolation between the points in this table to determine what the reading value is based on the analog input voltage. Each point in the table consists of an analog input voltage value (0-10.5 V) and a corresponding reading value. Only two points are necessary for linear inputs, however a larger number of points may be used to approximate non-linear inputs. The points range from 2 to 10, with a default of 2.

In the Main Menu, choose Instrument Controls > I/O Configuration > Analog Input Config > Select Channel > **Table Points**.

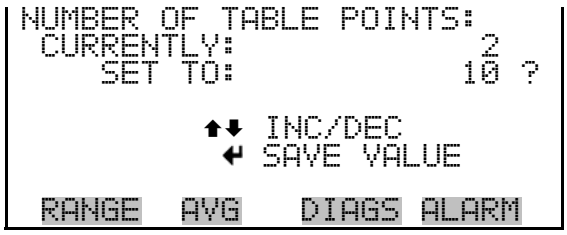

Table Point

The Table Point submenu allows the user to set up an individual table point.

In the Main Menu, choose Instrument Controls > I/O Configuration > Analog Input Config > **Table Point 1-10**.

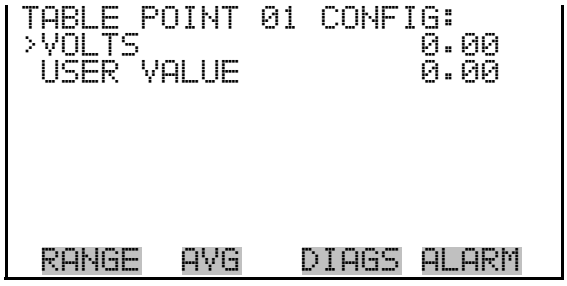

Volts

The Volts screen allows the user to set the input voltage for the selected table point in the conversion table, from 0.00 to 10.50. The default table is a two-point table with point 1: 0.00 V = 000.0 U and point 2: 10.00 V = 10.0 U.

In the Main Menu, choose Instrument Controls > I/O Configuration > Analog Input Config > Select Channel > select Point > **Volts**.

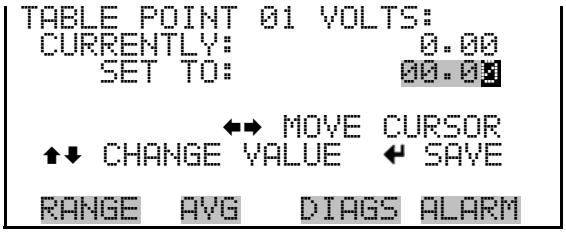

User Value

The User Value screen allows the user to set the output value for the corresponding input voltage for the selected table point in the conversion table, from -9999999 to 99999999. The default table is a two-point table with point 1: 0.00 V = 000.0 U and point 2: 10.00 V = 10.0 U.

In the Main Menu, choose Instrument Controls > I/O Configuration > Analog Input Config > Select Channel > select Point > **User Value**.

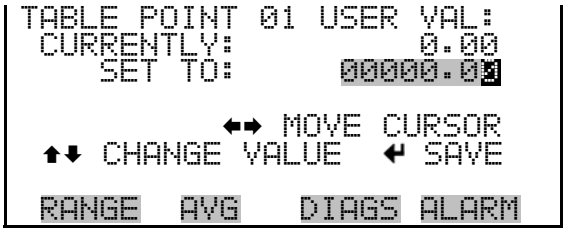

Temperature Compensation

Temperature compensation allows the user to turn temperature compensation on or off. The effects of temperature changes on the analyzer's subsystems and output have been empirically determined. This empirical data is used to compensate for any changes in temperature. This compensation can be used for special applications, or when operating the instrument outside the recommended temperature range.

When temperature compensation is on, the first line of the display shows the current internal instrument temperature (measured by a thermistor on the Interface board). When temperature compensation is off, the first line of the display shows the factory standard temperature of 30 °C.

In the Main Menu, choose Instrument Controls > **Temperature Compensation**.

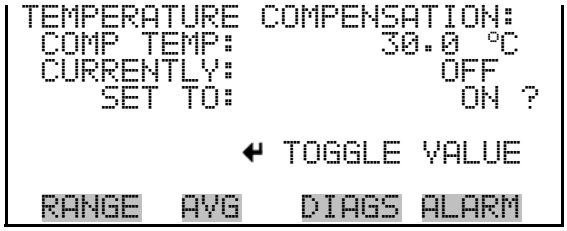

Pressure Compensation

Pressure compensation provides compensation for any changes to the instrument's output signal due to reaction chamber pressure variations. The effects of reaction chamber pressure changes on the analyzer's subsystems and output have been empirically determined. This empirical data is used to compensate for any change in reaction chamber pressure.

When pressure compensation is on, the display represents the current pressure in the fluorescence chamber. When pressure compensation is off, the display shows the factory standard pressure of 750 mmHg.

In the Main Menu, choose Instrument Controls > **Pressure Compensation**.

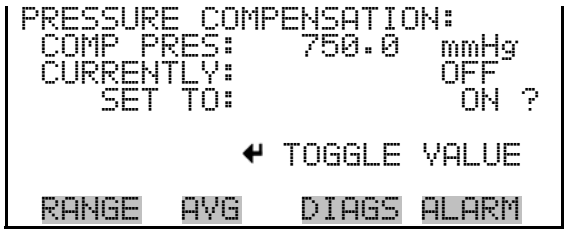

Screen Contrast

The Screen Contrast screen is used to change the contrast of the display. Values between 0 and 100% in increments of 5 are available. Changing the screen contrast may be necessary if the instrument is operated at extreme temperatures.

Notes The optimal contrast will change with changes in temperature. ▲

The optimal contrast will change from one LCD screen to another. If the LCD screen is replaced, the contrast may need to be reset. ▲

If the display contrast is not optimal, but the content on the screen is visible, select Instrument Controls > **Screen Contrast** and adjust the screen contrast. If the content on the screen is not visible, use the “set contrast 10” C-Link command to set screen contrast to mid range, then optimize the contrast. See “Contrast Levels” in the “C-Link Protocol Commands” appendix for more information on this command. ▲

In the Main Menu, choose Instrument Controls > **Screen Contrast**.

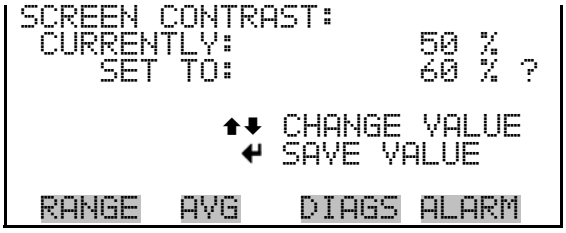

Service Mode

The Service Mode screen is used to turn the service mode on or off. The service mode locks out any remote actions and includes parameters and functions that are useful when making adjustments or diagnosing the Model 450*i*. The service (wrench) icon on the status bar is shown when service mode is on. For more information about the service mode, see "Service Menu" later in this chapter.

Note The service mode should be turned off when finished, as it prevents remote operation. ▲

In the Main Menu, choose Instrument Controls > **Service Mode**.

Date/Time

The Date/Time screen and allows the user to view and change the system date and time (24-hour format). The internal clock is powered by its own battery when instrument power is off.

In the Main Menu, choose Instrument Controls > **Date/Time**.

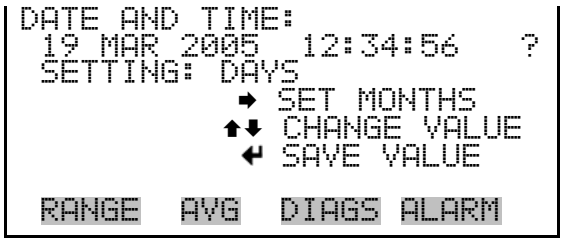

Timezone

The Timezone screen is used to set the timezone for the NTP time server. This should be set to the timezone that the instrument is located in. If the exact timezone is not shown in the list, it may be entered via a CLINK command (see Appendix B). The selections are: UTC (GMT), EST (GMT+5), CST (GMT+6), MST (GMT+7), PST (GMT+8), YST (GMT+9), HST (GMT+10), NST (GMT+11), DLW (GMT+12), CET (GMT-1), EET (GMT-2), BST (GMT-3), DLT (GMT-4), ECH (GMT-5), FOX (GMT-6), GLF (GMT-7), CCT (GMT-8), JST (GMT-9), GST (GMT-10), LMA (GMT-11), DLE (GMT-12), EDT (GMT+5/4), CDT (GMT+6/5), MDT (GMT+7/6), and PDT (GMT+8/7)

In the Main Menu, choose Instrument Controls > **Timezone**.

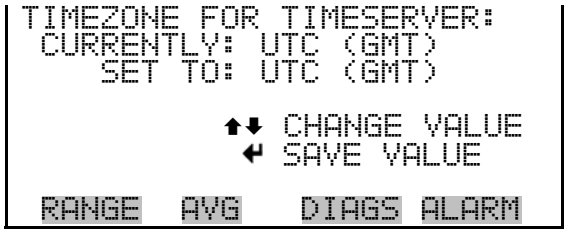

Diagnostics Menu

The Diagnostics menu provides access to diagnostic information and functions. This menu is useful when troubleshooting the instrument. The analog input readings and analog input voltages are only displayed if the I/O expansion board option is installed.

In the Main Menu, choose **Diagnostics**.

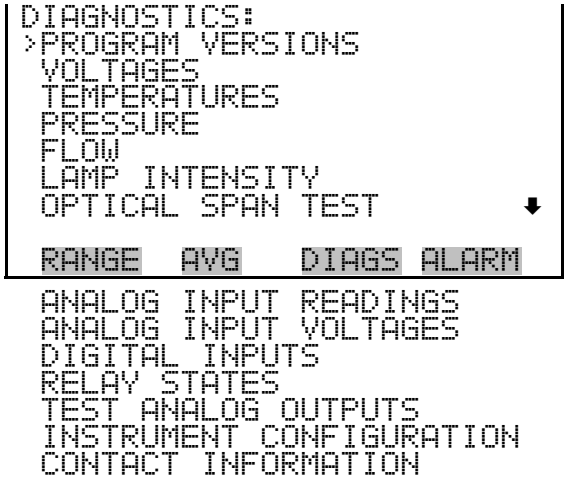

Program Versions

The Program Versions screen (read only) shows the version numbers of the programs installed. Prior to contacting the factory with any questions regarding the instrument, please note the product model program version numbers.

In the Main Menu, choose Diagnostics > **Program Versions**.

Voltages

The Voltages menu displays the current diagnostic voltage readings. This screen enables the power supply to be quickly read for low or fluctuating voltages without having to use a voltage meter. The I/O board item is only displayed if the I/O expansion board is installed.

In the Main Menu, choose Diagnostics > **Voltages**.

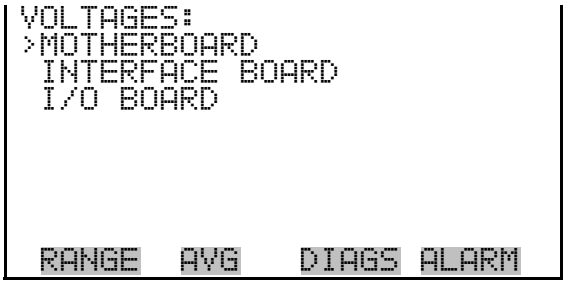

Motherboard Voltages

The Motherboard screen (read only) is used to display the current voltage readings on the motherboard.

In the Main Menu, choose Diagnostics > Voltages > **Motherboard Voltages**.

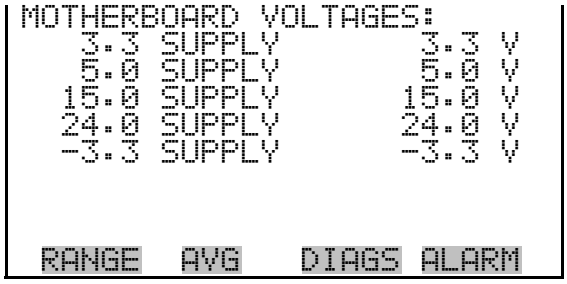

Interface Board Voltages

The Interface Board screen (read only) is used to display the current voltage readings on the interface board.

In the Main Menu, choose Diagnostics > Voltages > **Interface Board Voltages**.

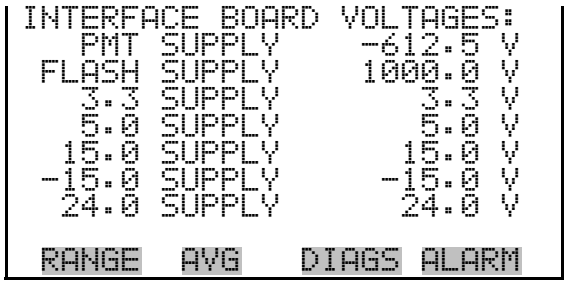

I/O Board Voltages

The I/O Board screen (read only) is used to display the current voltage readings on the I/O expansion board. This menu is only accessible if the I/O expansion board is installed.

In the Main Menu, choose Diagnostics > Voltages > **I/O Board Voltages**.

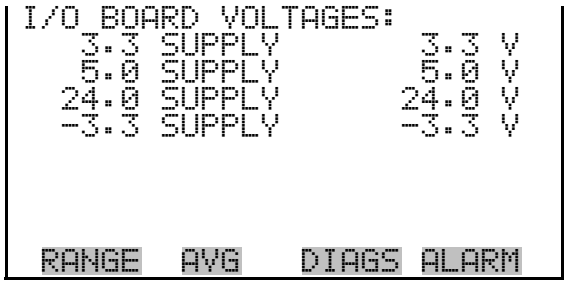

Temperatures

The Temperatures screen (read only) displays the current internal instrument temperature, chamber temperature, converter temperature, and permeation oven temperature (if installed). The internal temperature is the air temperature measured by a sensor located on the interface board.

In the Main Menu, choose Diagnostics > **Temperatures**.

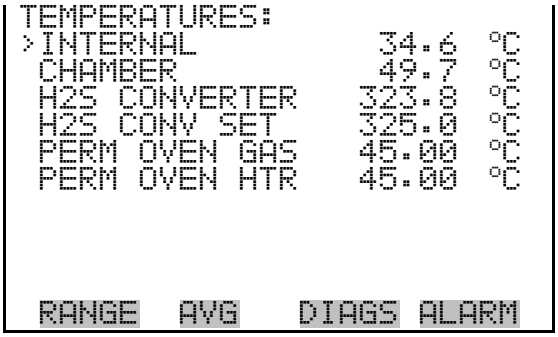

Pressure

The Pressure screen (read only) displays the current optical bench pressure. The pressure is measured by a pressure transducer in-line with the optical bench.

In the Main Menu, choose Diagnostics > **Pressure**.

Sample Flow

The Sample Flow screen (read only) displays the current sample flow rate. The flows is measured by an internal flow sensor.

In the Main Menu, choose Diagnostics > **Flow**.

Lamp Intensity

The Lamp Intensity screen (read only) displays the current lamp intensity in Hertz. Normally the intensity would read 90%, but this number will decrease over time as the lamp degrades.

In the Main Menu, choose Diagnostics > **Lamp Intensity**.

Optical Span Test

The Optical Span Test screen is used to turn the optical span test LED on or off, and displays the SO_2 concentration reading. Within the fluorescence chamber is a light emitting diode (LED) which may be used to simulate a concentration of SO_2. It is designed to provide a quick and easy way of checking the optics and electronics for span drift or other problems. The difference between when the LED is ON and OFF must be greater than 50 ppb.

In the Main Menu, choose Diagnostics > **Optical Span Test**.

Analog Input Readings

The Analog Input Readings screen (read only) displays the 8 current user-scaled analog readings (if the I/O expansion board option is installed).

In the Main Menu, choose Diagnostics > **Analog Input Readings**.

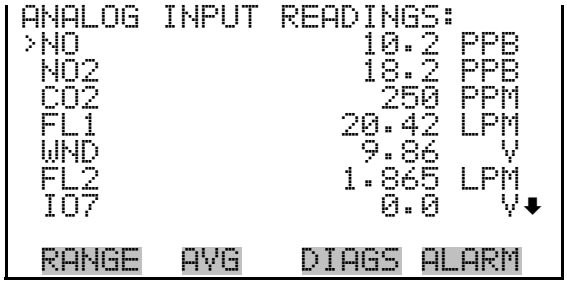

Analog Input Voltages

The Analog Input Voltages screen (read only) displays the 8 raw analog voltage readings (if the I/O expansion board option is installed).

In the Main Menu, choose Diagnostics > **Analog Input Voltages**.

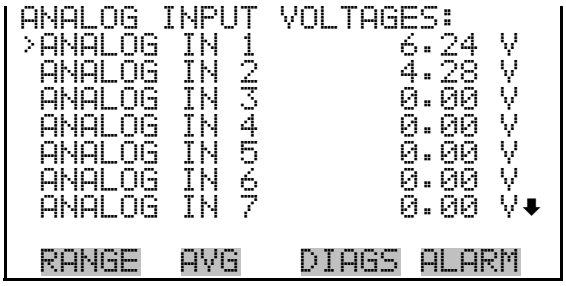

Digital Inputs

The Digital Inputs screen (read only) displays the state of the 16 digital inputs. Pull-ups are provided on all the inputs, so if nothing is connected they will read (1), if an input is brought to ground, it will read (0).

In the Main Menu, choose Diagnostics > **Digital Inputs**.

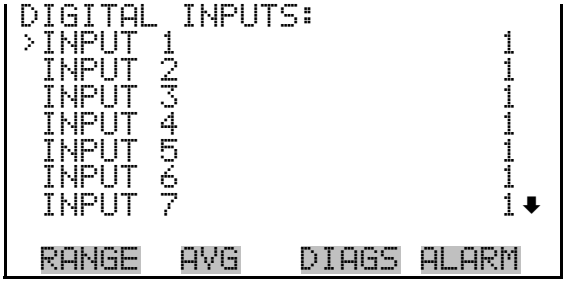

Relay States

The Relay States screen displays the state of the 10 digital outputs and allows toggling of the state to either on (1) or off (0). The relays are restored to their original states upon exiting this screen.

In the Main Menu, choose Diagnostics > **Relay States**.

Press [↵] to toggle the relay state open and closed.

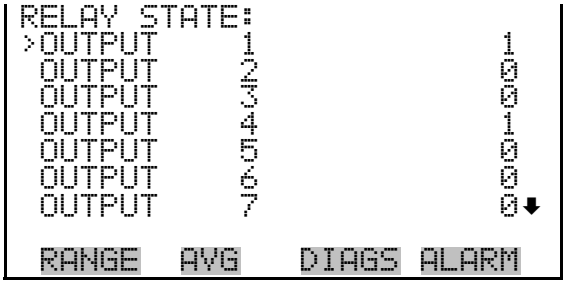

Test Analog Outputs

The Test Analog Outputs menu contains a number of digital to analog converter (DAC) calibration items. Channel choices include all analog outputs, 6 voltage channels, and 6 current channels (if the I/O expansion board option is installed).

In the Main Menu, choose Diagnostics > **Test Analog Outputs**.

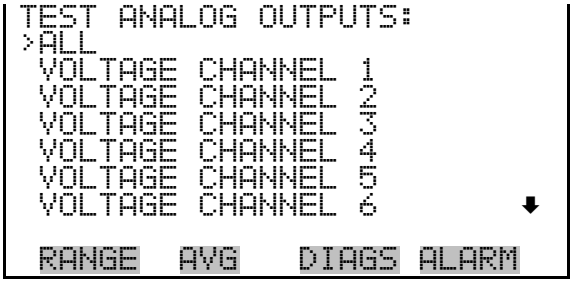

Set Analog Outputs

The Set Analog Outputs screen contains three choices: Set to full-scale, set to zero, or reset to normal. Full-scale sets the analog outputs to the full-scale voltage, zero sets the analog outputs to 0 volts, and normal operation. The example that follows shows the selected output state "ALL" is set to full-scale.

In the Main Menu, choose Diagnostics > Test Analog Outputs > **ALL, Voltage Channel 1-6**, or **Current Channel 1-6**.

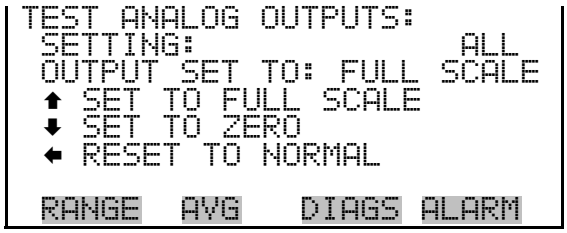

Instrument Configuration

The Instrument Configuration screen displays information on the hardware configuration of the instrument.

In the Main Menu, choose Diagnostics > **Instrument Configuration**.

Note If the analyzer is in service mode, pressing [↵] on the item will toggle it yes or no (with the exception of some items such as dilution and auto calibration, which may only be enabled at the factory). ▲

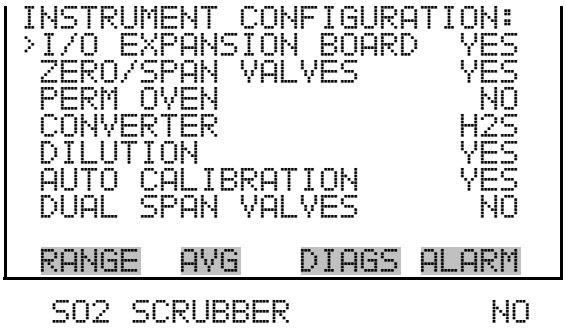

Contact Information

The Contact Information screen displays the customer service information.

In the Main Menu, choose Diagnostics > **Contact Information**.

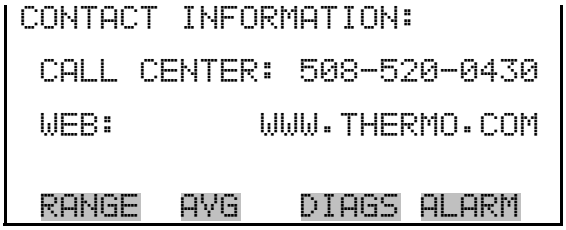

Alarms Menu

The alarms menu displays a list of items that are monitored by the analyzer. If the item being monitored goes outside the lower or upper limit, the status of that item will go from “OK” to either “LOW” or “HIGH”, respectively. If the alarm is not a level alarm, the status will go from “OK” to “FAIL”. The number of alarms detected is displayed to indicate how many alarms have occurred. If no alarms are detected, the number zero is displayed.

To see the actual reading of an item and its minimum and maximum limits, move the cursor to the item and press ↵.

Items displayed are determined by the options installed. The zero/span check and auto calibration alarms are visible only if the zero/span check or auto calibration options are enabled and the instrument is in manual (single gas) mode. The motherboard status, interface board status, and I/O expansion board status (if installed) indicates that the power supplies are working and connections are successful. There are no setting screens for these alarms.

If any alarms are active, the alarm (bell) icon is displayed on the right side of the status bar.

In the Main Menu, choose **Alarms**.

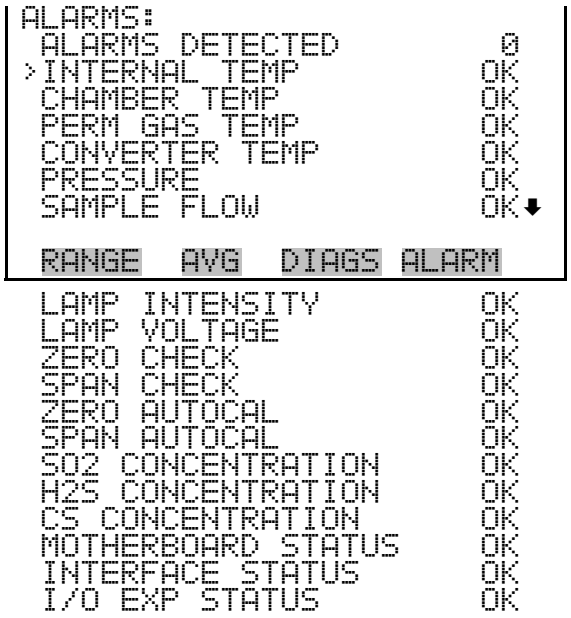

Internal Temperature

The Internal Temperature screen displays the current internal temperature and sets the minimum and maximum alarm limits. Acceptable alarm limits range from 8 to 47 °C. If the internal temperature reading goes beyond either the minimum or maximum alarm limit, an alarm is activated and the alarm (bell) icon appears in status bar on the Run screen and in the Main Menu.

In the Main Menu, choose Alarms > **Internal Temp**.

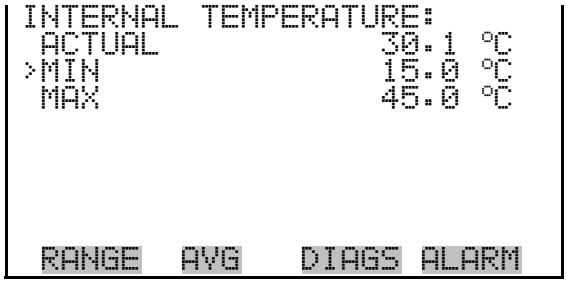

Min and Max Internal Temperature Limits

The Minimum Internal Temperature alarm limit screen is used to change the minimum internal temperature alarm limit. The minimum and maximum internal temperature screens function the same way.

In the Main Menu, choose Alarms > Internal Temp > **Min** or **Max**.

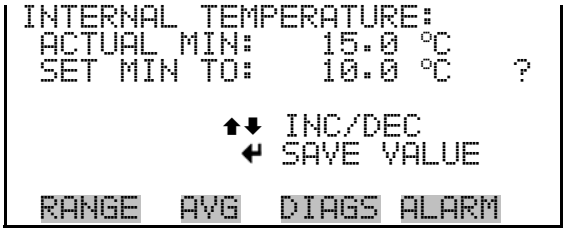

Chamber Temperature

The Chamber Temperature screen displays the current chamber temperature and sets the minimum and maximum alarm limits. The chamber temperature is regulated at 45.0 degrees C. Acceptable alarm limits range from 43 to 47 °C. If the chamber temperature reading goes beyond either the minimum or maximum limit, an alarm is activated and the alarm (bell) icon appears in status bar on the Run screen and in the Main Menu.

In the Main Menu, choose Alarms > **Chamber Temp**.

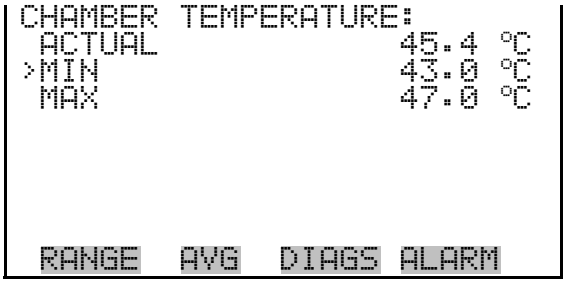

Min and Max Chamber Temperature Limits

The Minimum Chamber Temperature alarm limit screen is used to change the minimum chamber temperature alarm limit. The minimum and maximum internal temperature screens function the same way.

In the Main Menu, choose Alarms > Chamber Temp > **Min** or **Max**.

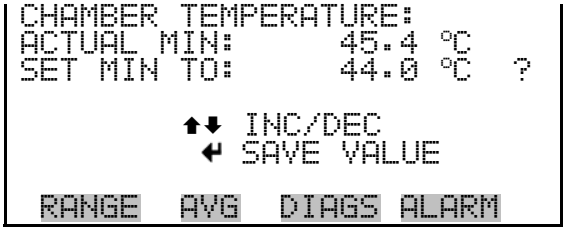

Permeation Oven Gas Temperature

The Permeation Oven Gas Temperature screen displays the current permeation oven gas temperature and sets the minimum and maximum alarm limits. Acceptable alarm limits range from 25.00 to 50.00 °C. If the temperature reading goes beyond either the minimum or maximum limit, an alarm is activated. The alarm (bell) icon appears in status bar on the Run screen and in the Main Menu.

In the Main Menu, choose Alarms > **Perm Gas Temp**.

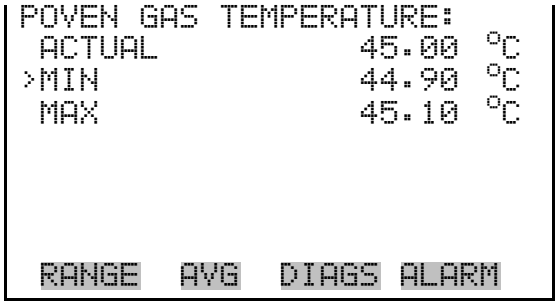

Min and Max Permeation Oven Temperature Limits

The Minimum Permeation Oven Gas Temperature alarm limit screen is used to change the minimum temperature alarm limit. The minimum and maximum permeation gas temperature screens function the same way.

In the Main Menu, choose Alarms > Perm Gas Temp > **Min** or **Max**.

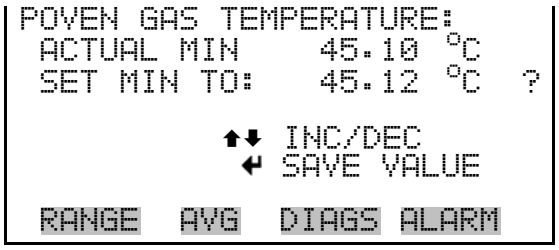

Converter Temperature

The Converter Temperature screen displays the current converter temperature and sets the minimum and maximum alarm limits. The converter temperature is regulated at 325.0 °C. Acceptable alarm limits range from 300 to 400 °C. If the converter temperature reading goes beyond either the minimum or maximum limit, an alarm is activated and the alarm (bell) icon appears in status bar on the Run screen and in the Main Menu.

In the Main Menu, choose Alarms > **Converter Temp**.

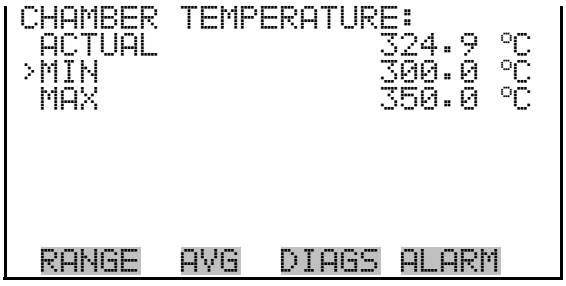

Min and Max Converter Temperature Limits

The Minimum Converter Temperature alarm limit screen is used to change the minimum converter temperature alarm limit. The minimum and maximum internal temperature screens function the same way.

In the Main Menu, choose Alarms > Converter Temp > **Min** or **Max**.

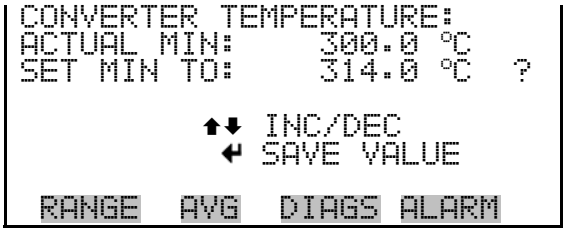

Pressure

The Pressure screen displays the current reaction chamber pressure reading and sets the minimum and maximum alarm limits. Acceptable alarm limits range from 400 to 1000 mmHg. If the pressure reading goes beyond either the minimum or maximum limit, an alarm is activated and the alarm (bell) icon appears in status bar on the Run screen and in the Main Menu.

In the Main Menu, choose Alarms > **Pressure**.

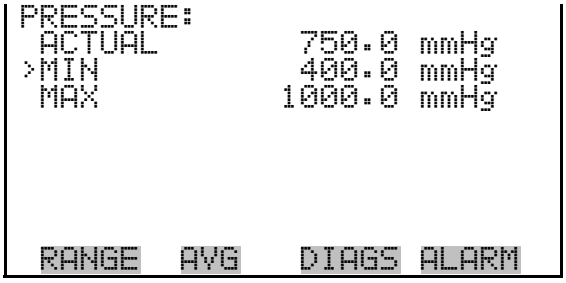

Min and Max Pressure Limits

The Minimum Pressure alarm limit screen is used to change the minimum pressure alarm limit. The minimum and maximum pressure screens function the same way.

In the Main Menu, choose Alarms > Pressure > **Min** or **Max**.

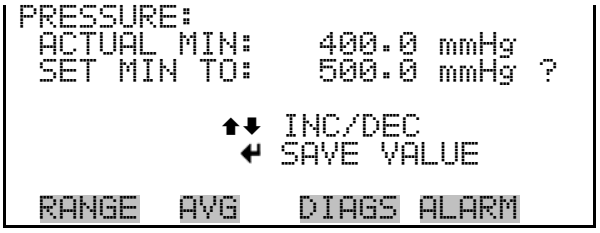

Sample Flow

The Sample Flow screen displays the current sample flow reading and sets the minimum and maximum alarm limits. Acceptable alarm limits range from 0 to 2.5 LPM. If the sample flow reading goes beyond either the minimum or maximum limit, an alarm is activated and the alarm (bell) icon appears in status bar on the Run screen and in the Main Menu.

In the Main Menu, choose Alarms > **Sample Flow**.

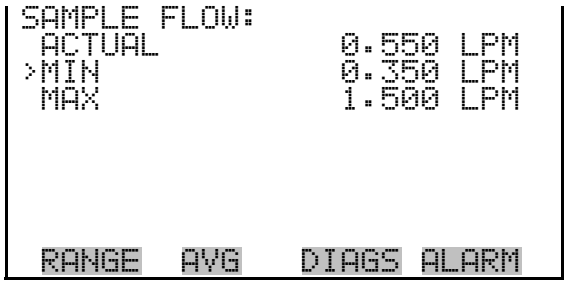

Min and Max Sample Flow Limits

The Minimum Sample Flow alarm limit screen is used to change the minimum sample flow alarm limit. The minimum and maximum sample flow screens function the same way.

In the Main Menu, choose Alarms > Sample Flow > **Min** or **Max**.

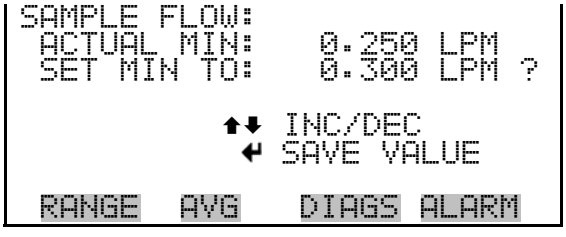

Lamp Intensity

The Lamp Intensity screen displays the current lamp intensity reading and sets the minimum and maximum alarm limits. Acceptable alarm limits range from 20 to 100 percent. If the lamp intensity reading goes beyond either the minimum or maximum limit, an alarm is activated and the alarm (bell) icon appears in status bar on the Run screen and in the Main Menu.

In the Main Menu, choose Alarms > **Lamp Intensity**.

Min and Max Lamp Intensity Limits

The Minimum Lamp Intensity alarm limit screen is used to change the minimum lamp intensity alarm limit. The minimum and maximum lamp intensity screens function the same way.

In the Main Menu, choose Alarms > Lamp Intensity > **Min** or **Max**.

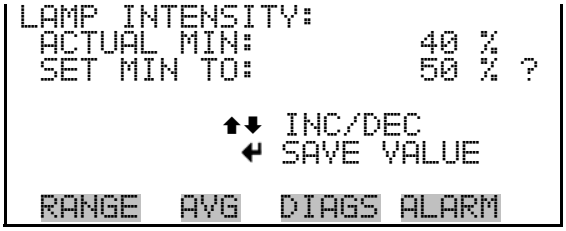

Lamp Voltage

The Lamp Voltage screen displays the current lamp voltage and sets the minimum and maximum alarm limits. Acceptable alarm limits range from 500 to 1200 volts. If the lamp voltage goes beyond either the minimum or maximum limit, an alarm is activated and the alarm (bell) icon appears in status bar on the Run screen and in the Main Menu.

In the Main Menu, choose Alarms > **Lamp Voltage**.

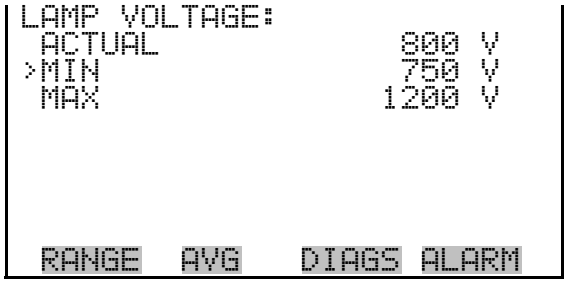

Min and Max Lamp Voltage Limits

The Minimum Lamp Voltage alarm limit screen is used to change the minimum lamp voltage alarm limit. The minimum and maximum lamp voltage screens function the same way.

In the Main Menu, choose Alarms > Lamp Voltage > **Min** or **Max**.

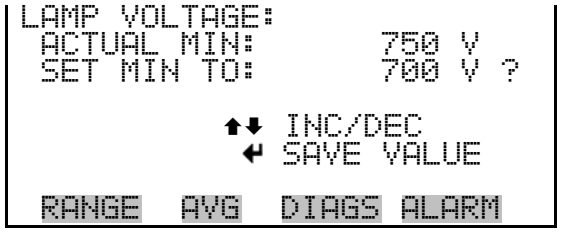

Zero and Span Check

The Zero and Span Check screen allows the user to view the status of the most recent zero/span checks and set the maximum check offsets. An alarm will be triggered if a zero or span check indicates drift that exceeds the offset value. The zero and span check screens are visible only if the zero/span check option is enabled. Their functions are similar.

In the Main Menu, choose Alarms > **Zero** or **Span Check**.

Max Zero and Span Offset

The Max Zero and Span Check Offset screens are used to change the maximum check offsets. The maximum zero and span offset screens function the same way.

In the Main Menu, choose Alarms > Zero or Span Check > **Max Offset**.

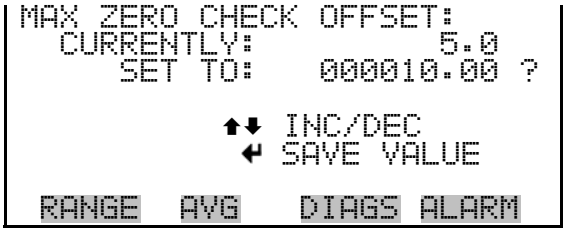

Zero and Span Auto Calibration

The Zero and Span Auto Calibration screens (read only) allow the user to view the status of the most recent auto background calibration or span calibrations. The zero and span auto calibration screens are visible only if the zero/span check option is enabled and the zero or span cal reset function is enabled.

In the Main Menu, choose Alarms > **Zero** or **Span Autocal**.

SO_2, CS, and H_2S Concentration

The Concentration alarm screens display the current SO_2, CS, and H_2S concentrations and set the minimum and maximum alarm limits. Acceptable alarm limits range from 0 to 10000 ppb (0 to 10 ppm) or 0 to 25000 µg/m^3 (0 to 25 mg/ m^3). The minimum alarm may be programmed as a floor trigger (alarm is triggered when the concentration falls below the minimum value) or a ceiling trigger (alarm is triggered when the concentration goes above the minimum value). If the SO_2, CS, or H_2S concentration goes beyond either the minimum or maximum limit, an alarm is activated. The alarm (bell) icon appears in status bar on the Run screen and in the Main Menu.

In the Main Menu, choose Alarms > **SO_2, CS, or H_2S Concentration**.

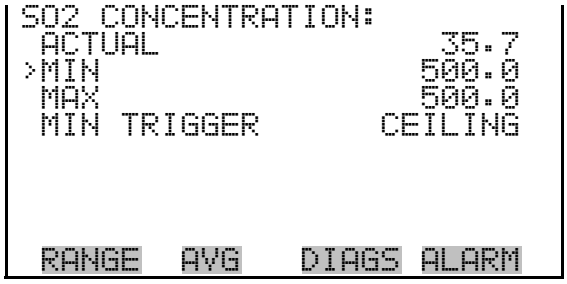

Min and Max SO_2, CS, and H_2S Concentration Limits

The Minimum Concentration alarm limit screens are used to change the minimum concentration alarm limits. The minimum and maximum SO_2, CS, and H_2S concentration alarm limit screens function the same way.

In the Main Menu, choose Alarms > select Concentration> **Min** or **Max**.

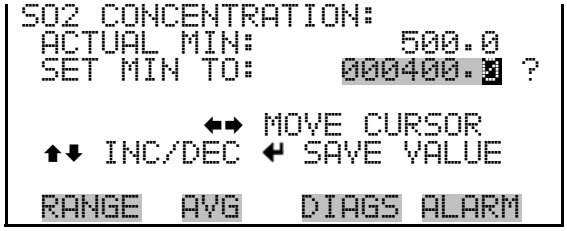

Min Trigger

The Minimum Trigger screen allows the user to view and set the SO_2, CS, and H_2S concentration alarm trigger type to either floor or ceiling. The minimum alarm may be programmed as a floor trigger (alarm is triggered when the concentration falls below the minimum value) or a ceiling trigger (alarm is triggered when the concentration goes above the minimum value).

In the Main Menu, choose Alarms > select Concentration > **Min Trigger**.

Service Menu

The Service menu appears only when the instrument is in the service mode. When service mode is active, the service (wrench) icon is displayed on the right side of the status bar. To put the instrument into the service mode choose Instrument Controls > **Service Mode** in the Main Menu.

Advanced diagnostic functions are included in the service mode. Meaningful data should not be collected when the instrument is in the service mode.

In the Main Menu, choose **Service**.

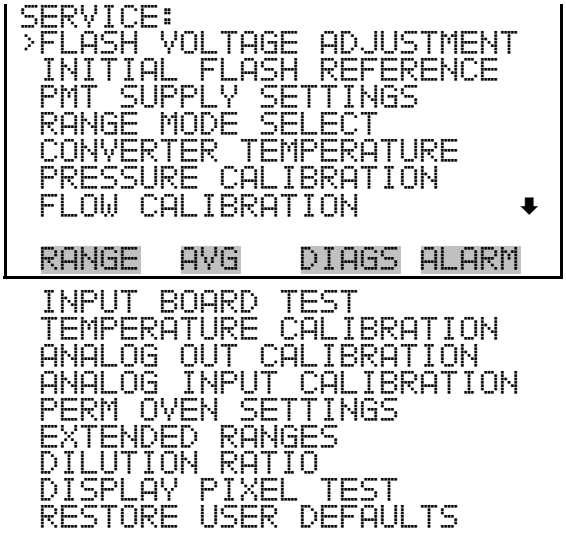

Flash Voltage Adjustment

The Flash Voltage Adjustment screen allows the user to manually adjust the flasher supply voltage. The flash voltage adjustment screen is visible only when the instrument is in service mode. For more information on the service mode, see "Service Mode" earlier in this chapter.

Note This adjustment should only be performed by an instrument service technician. ▲

In the Main Menu, choose Service > **Flash Voltage Adjustment**.

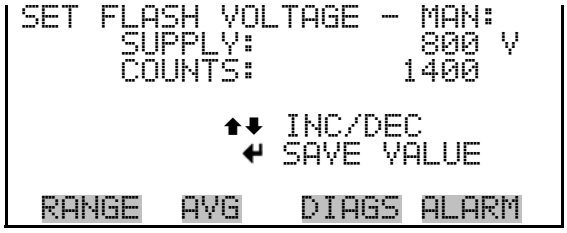

Initial Flash Reference

The Initial Flash Reference allows the user to view and set the initial flash reference. The initial flash reference limits are from 2.8 to 5.0 volts. The initial flash reference screen is visible only when the instrument is in service mode. For more information on the service mode, see "Service Mode" earlier in this chapter.

Note This adjustment should only be performed by an instrument service technician. ▲

In the Main Menu, choose Service > **Initial Flash Reference**.

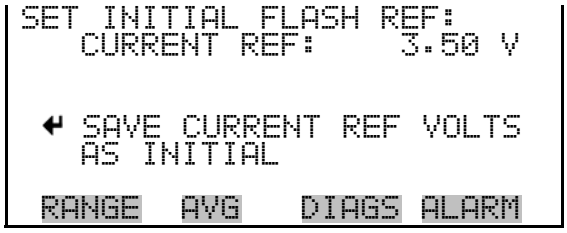

PMT Voltage Adjustment

The PMT Voltage Adjustment screen is used to manually adjust the PMT supply voltage. The PMT voltage adjustment is visible only when the instrument is in service mode. For more information on the service mode, see "Service Mode" earlier in this chapter.

Note This adjustment should only be performed by an instrument service technician. ▲

In the Main Menu, choose Service > **PMT Supply Settings**.

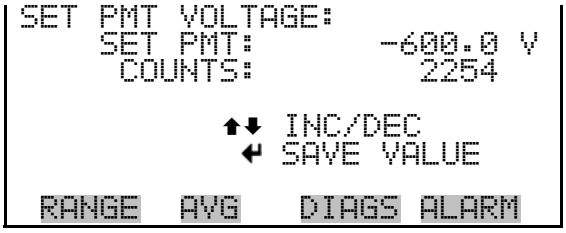

Range Mode Select

The Range Mode Select screen is used to switch between the various range modes: single, dual, and auto range. The Range Mode Select screen is visible only when the instrument is in service mode. For more information on the service mode, see "Service Mode" earlier in this chapter.

In the Main Menu, choose Service > **Range Mode Select**.

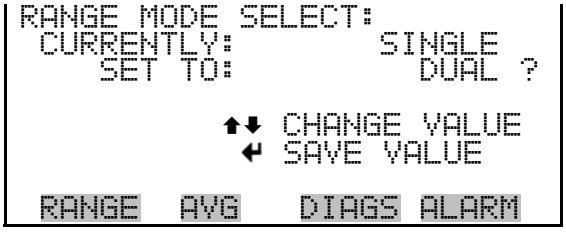

Converter Temperature

The Set Converter Temperature screen is used to change the converter set temperature. The converter set temperature reading is updated every second. The converter set temperature screen is visible only when the instrument is in service mode. For more information on the service mode, see “Service Mode” earlier in the chapter.

Note This adjustment should only be performed by an instrument service technician. ▲

In the Main Menu, choose Service > **Converter Temperature**.

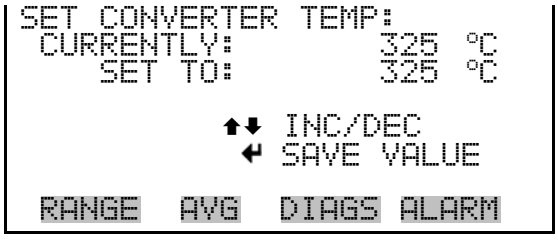

Pressure Calibration

The Pressure Calibration submenu is used to calibrate the pressure sensor to zero, span, or restore factory default values. The pressure calibration is visible only when the instrument is in service mode. For more information on the service mode, see "Service Mode" earlier in this chapter.

The pressure sensor's zero counts and span slope are displayed on the menu

Note This adjustment should only be performed by an instrument service technician. ▲

In the Main Menu, choose Service > **Pressure Calibration**.

Calibrate Pressure Zero

The Calibrate Pressure Zero screen calibrates the pressure sensor at zero pressure.

Notes A vacuum pump must be connected to the pressure sensor before performing the zero calibration. ▲

Wait at least 30 seconds for the reading to stabilize before saving the value. ▲

In the Main Menu, choose Service > Pressure Calibration > **Zero**.

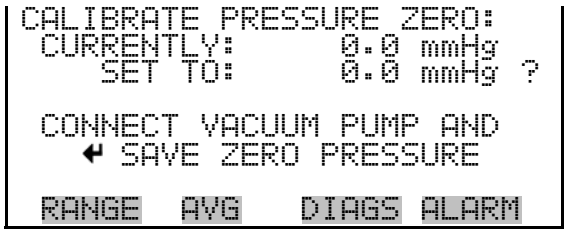

Calibrate Pressure Span

The Calibrate Pressure Span screen allows the user to view and set the pressure sensor calibration span point.

Notes The plumbing going to the pressure sensor should be disconnected so the sensor is reading ambient pressure before performing the span calibration. The operator should use an independent barometer to measure the ambient pressure and enter the value on this screen before calibrating. Wait at least 30 seconds for the reading to stabilize before saving the value. ▲

In the Main Menu, choose Service > Pressure Calibration > **Span**.

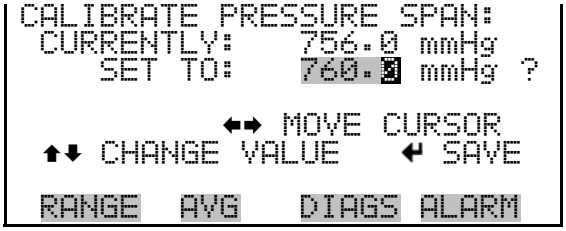

Restore Default Pressure Calibration

The Restore Default Pressure Calibration screen allows the user to reset the configuration values to factory defaults.

In the Main Menu, choose Service > Pressure Calibration > **Set Defaults**.

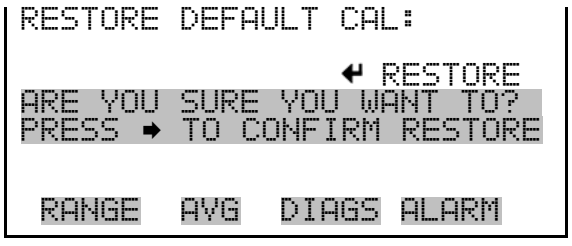

Flow Calibration

The Flow Calibration submenu is used to calibrate the flow sensor to zero, span, or restore factory default values. The flow calibration is visible only when the instrument is in service mode. For more information on the service mode, see "Service Mode" earlier in the chapter.

Note This adjustment should only be performed by an instrument service technician. ▲

In the Main Menu, choose Service > **Flow Calibration**.

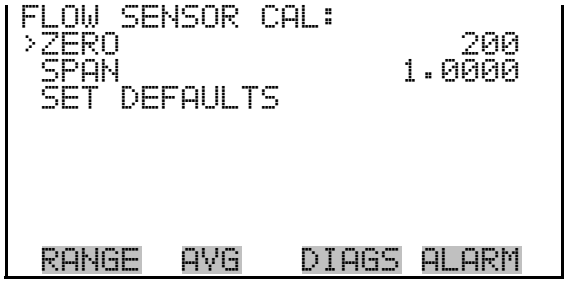

Calibrate Flow Zero

The Calibrate Flow Zero screen calibrates the flow sensor at zero flow.

Notes The pump must be disconnected before performing the zero calibration. ▲

Wait at least 30 seconds for the reading to stabilize before saving the value. ▲

In the Main Menu, choose Service > Flow Calibration > **Zero**.

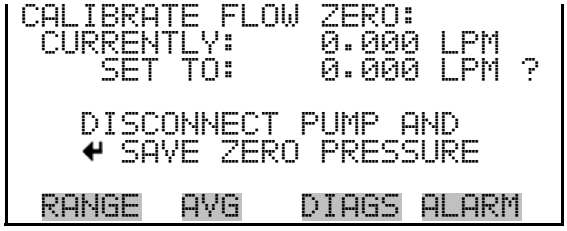

Calibrate Flow Span

The Calibrate Flow Span screen allows the user to view and set the flow sensor calibrate span point.

Notes An independent flow sensor is required to read the flow, then the operator enters the flow value on this screen to perform the calibration. ▲

Wait at least 30 seconds for the reading to stabilize before saving the value. ▲

In the Main Menu, choose Service > Flow Calibration > **Span**.

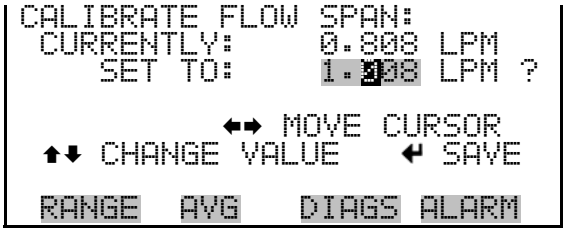

Restore Default Flow Calibration

The Restore Default Flow Calibration screen allows the user to reset the configuration values to factory defaults.

In the Main Menu, choose Service > Flow Calibration > **Set Defaults**.

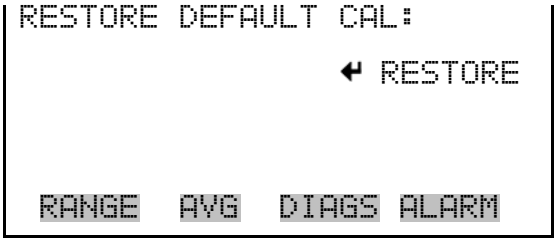

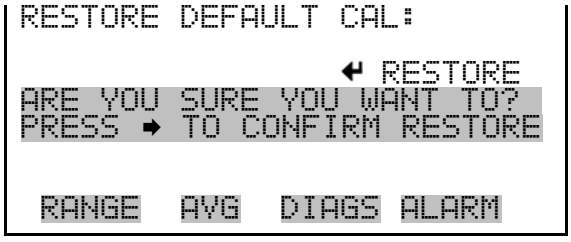

Input Board Test

The Input Board Test screen is used to manually adjust the input board gain. This may be used as a troubleshooting tool for the input board. The gain setting is reset upon exiting this screen. The input board test is visible only when the instrument is in service mode. For more information on the service mode, see "Service Mode" earlier in the chapter.

Note This adjustment should only be performed by an instrument service technician. ▲

In the Main Menu, choose Service > **Input Board Test**.

Use ← and → to change the gain between 1, 10 and 100.

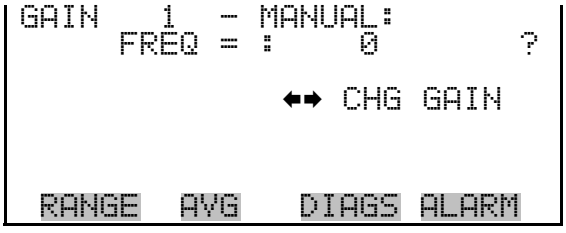

Temperature Calibration

The Temperature calibration screen allows the user to view and set the ambient temperature sensor calibration. The temperature calibration is visible only when the instrument is in service mode. For more information on the service mode, see "Service Mode" earlier in the chapter.

Notes This adjustment should only be performed by an instrument service technician. ▲

Wait at least 30 seconds for the reading to stabilize before saving the value. ▲

In the Main Menu, choose Service > **Temperature Calibration**.

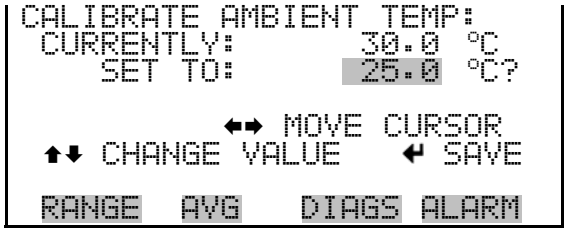

Analog Output Calibration

The Analog Output Calibration menu is a selection of analog output channels to calibrate, and allows the user to select the calibration action zero or span. Current channels are visible only if the I/O expansion board is installed. The analog output calibration is visible only when the instrument is in service mode. For more information on the service mode, see "Service Mode" earlier in the chapter.

Note This adjustment should only be performed by an instrument service technician. ▲

In the Main Menu, choose Service > **Analog Out Calibration**.

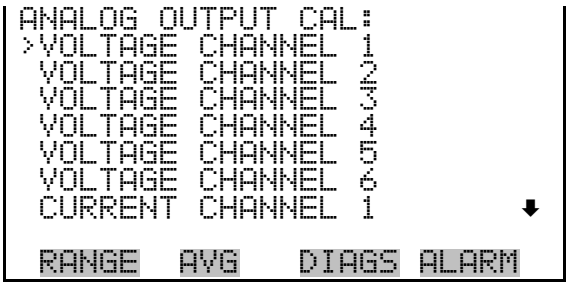

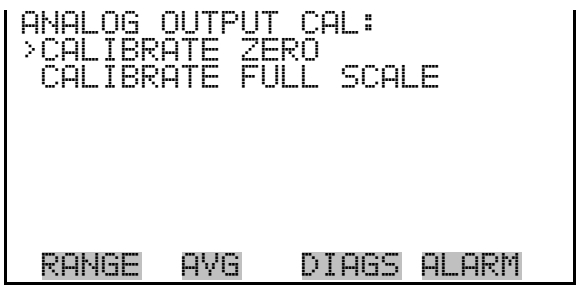

Analog Output Calibrate Zero

The Analog Output Calibrate Zero screen allows the user to calibrate the zero state of the selected analog output. The operator must connect a meter to the output and adjust the output until it reads 0.0 V on the meter.

In the Main Menu, choose Service > Analog Out Calibration > Selected Channel > **Calibrate Zero**.

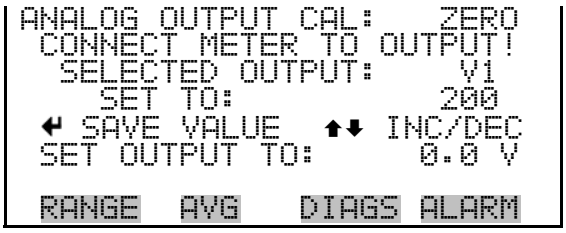

Analog Output Calibrate Full-Scale

The Analog Output Calibrate Full-Scale screen allows the user to calibrate the full-scale state of the selected analog output. The operator must connect a meter to the output and adjust output until it reads the value shown in the set output to: field.

In the Main Menu, choose Service > Analog Out Calibration > Selected Channel > **Calibrate Full Scale**.

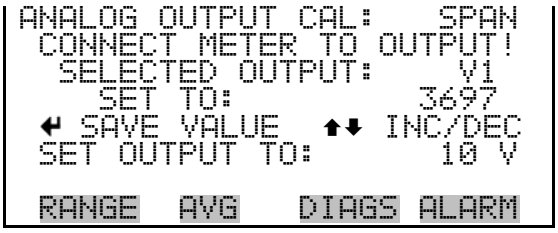

Analog Input Calibration

The Analog Input Calibration menu is a selection of analog input channels to calibrate, and allows the user to select the calibration action zero or span. The analog input calibration is visible only when the I/O expansion board is installed and the instrument is in service mode. For more information on the service mode, see "Service Mode" earlier in the chapter.

Note This adjustment should only be performed by an instrument service technician. ▲

In the Main Menu, choose Service > **Analog Input Calibration**.

Analog Input Calibrate Zero

The Analog Input Calibrate Zero screen allows the user to calibrate the zero state of the selected analog input.

In the Main Menu, choose Service > Analog Input Calibration > select Channel > **Calibrate Zero**. (Hook up a voltage source of 0 V to the analog input channel.)

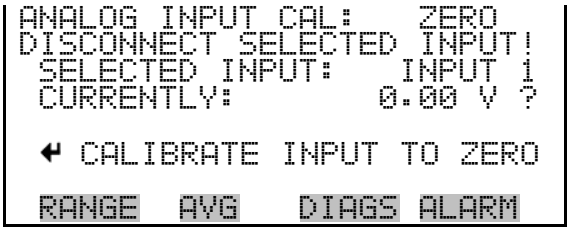

Analog Input Calibrate Full-Scale

The Analog Input Calibration Full-Scale screen allows the user to calibrate the full-scale state of the selected analog input.

In the Main Menu, choose Service > Analog Input Calibration > select Channel > **Calibrate Full Scale**. (Connect a voltage source of 10 V to the analog input channel.)

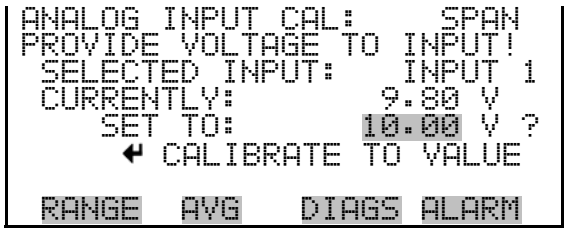

Permeation Oven Settings

The Permeation Oven Settings menu is used for setting up and calibrating the permeation oven option. The permeation oven settings menu is visible only when the instrument is in service mode. For more information on the service mode, see "Service Mode" earlier in the chapter.

Note This adjustment should only be performed by an instrument service technician. ▲

In the Main Menu, choose Service > **Perm Oven Settings**.

Calibrate Gas Thermistor

The Calibrate Gas Thermistor submenu is used for calibrating the permeation oven gas thermistor using a water bath or known resistance.

In the Main Menu, choose Service > Perm Oven Settings > Cal Gas Thermistor > **Water Bath** or **Known Resistor**.

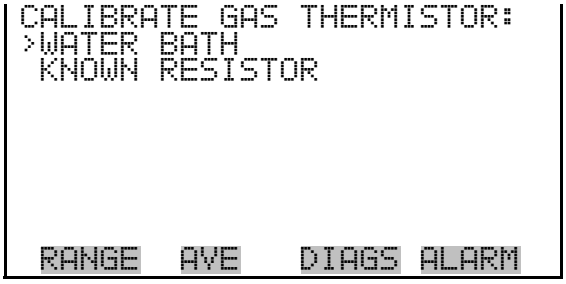

Water Bath

The Calibrate Gas Thermistor Water Bath screen allows the user to view and set the permeation oven gas temperature to a known temperature value.

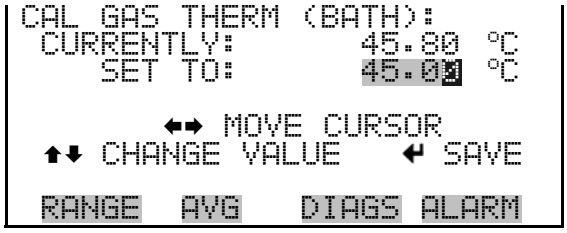

Resistor

The Calibrate Gas Thermistor Resistance screen allows the user to view and set the permeation oven gas thermistor resistance to a known resistor value.

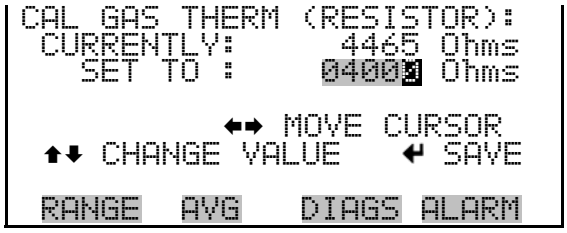

Calibrate Oven Thermistor

The Calibrate Oven Thermistor menu is used to view and set the permeation oven thermistor resistance to a known resistor value.

In the Main Menu, choose Service > Perm Oven Settings > **Cal Oven Thermistor.**

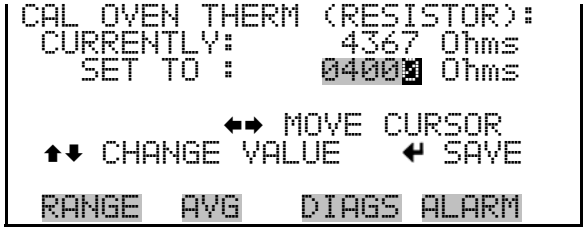

Permeation Oven Setpoint

The Permeation Oven Setpoint screen is used to select the permeation oven state to not present, or the desired temperature choice of 30, 35, and 45 °C.

In the Main Menu, choose Service > Perm Oven Settings > **Perm Oven Selection**.

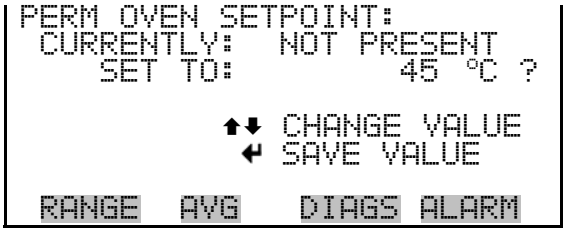

Factory Calibrate Gas Thermistor

The Factory Calibrate Gas Thermistor submenu is used for calibrating the permeation oven gas thermistor to either low point, high point, or set defaults.

In the Main Menu, choose Service > Perm Oven Settings > **Factory Cal Gas Therm**.

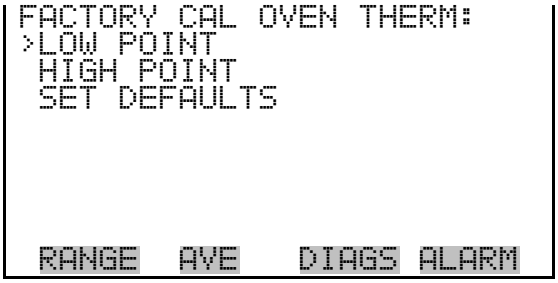

Low and High Points

The Calibrate Gas Thermistor Low Point screen allows the user to view and set the permeation oven thermistor resistance. The low and high point screens function the same way. Typically, 4.2K Ohms is used for the low point and 5.0K Ohms is used for the high point.

In the Main Menu, choose Service > Perm Oven Settings > Factory Cal Gas Therm > **Low Point** or **High Point**.

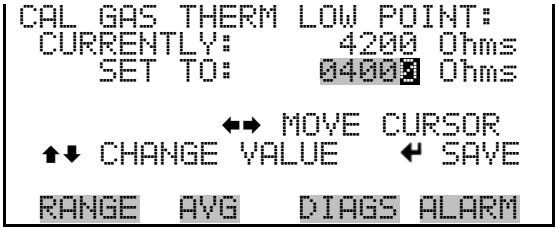

Set Defaults

The Set Defaults screen allows the user to reset the configuration values to factory defaults.

In the Main Menu, choose Service > Perm Oven Settings > Factory Cal Gas Therm > **Set Defaults**.

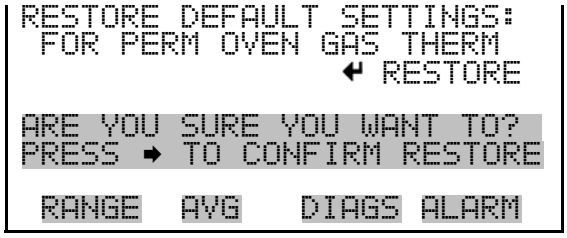

Factory Calibrate Oven Thermistor

The Factory Calibrate Oven Thermistor submenu is used for calibrating the permeation oven heater thermistor to either low point, high point, or set defaults.

In the Main Menu, choose Service > Perm Oven Settings > **Factory Cal Oven Therm**.

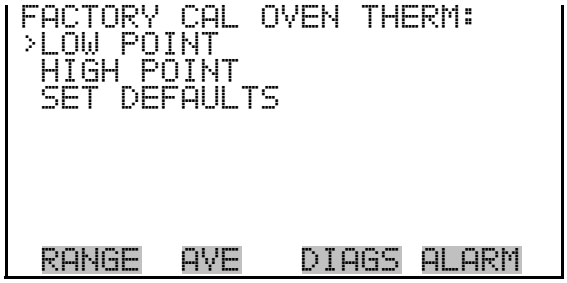

Low and High Points

The Calibrate Oven Thermistor Low Point screen allows the user to view and set the permeation oven thermistor resistance. The low and high point screens function the same way. Typically, 4.2K Ohms is used for the low point and 5.0K Ohms is used for the high point.

In the Main Menu, choose Service > Perm Oven Settings > Factory Cal Oven Therm > **Low Point** or **High Point**.

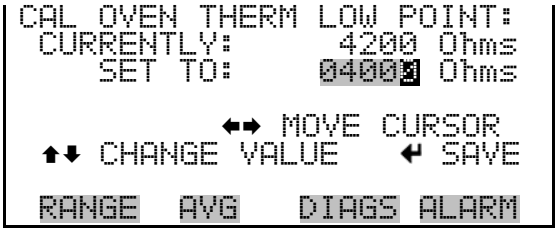

Set Defaults

The Set Defaults screen allows the user to reset the configuration values to factory defaults.

In the Main Menu, choose Service > Perm Oven Settings > Factory Cal Oven Therm > **Set Defaults**.

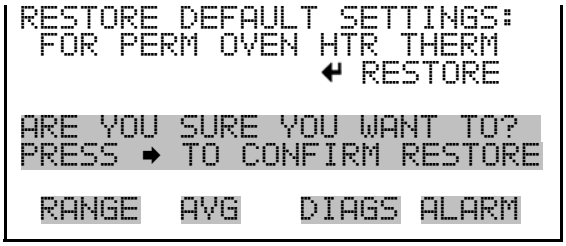

Extended Ranges

The Extended Ranges screen is used to turn the extended ranges feature ON and OFF. The extended ranges is visible only when the instrument is in service mode. For more information on the service mode, see "Service Mode" described previously in this chapter.

Dilution Ratio

The Dilution Ratio screen allows the user to view and set the dilution ratio. Acceptable values are 1–500: 1. The default is 1:1. When this value is set, the dilution ratio is applied to all concentration measurements. This screen is only accessible if the dilution ratio option is installed.

In the Main Menu, choose Service > **Dilution Ratio**.

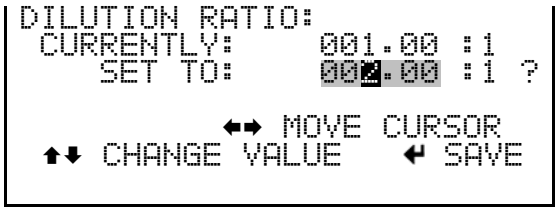

Display Pixel Test

The Display Pixel Test is used to test the LCD display. The display pixel test screen is visible only when the instrument is in service mode. For more information on the service mode, see "Service Mode" earlier in the chapter.

In the Main Menu, choose Service > **Display Pixel Test**.

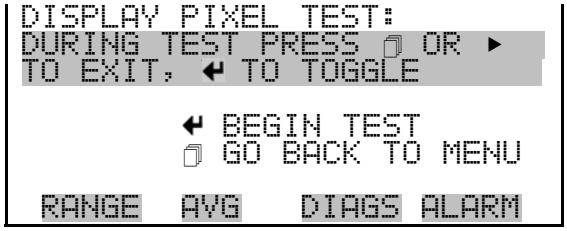

Restore User Defaults

The Restore User Defaults screen is used to reset the user calibration and configuration values to factory defaults. The restore default user is visible only when the instrument is in service mode. For more information on the service mode, see "Service Mode" earlier in the chapter.

In the Main Menu, choose Service > **Restore User Defaults**.

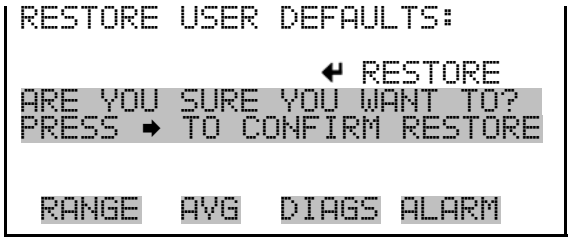

Password Menu

The Password menu allows the user to configure password protection. If the instrument is locked, none of the settings may be changed via the front panel user interface. The password (lock) icon on the right side of the status bar indicates that the password lock is active. The items visible under the password menu are determined by the instrument's password status.

In the Main Menu, choose **Password**.

Set Password

The Set Password screen is used to set the password to unlock the front panel. The set password is shown if the instrument is unlocked and the password is set.

In the Main Menu, choose Password > **Set Password**.

Lock Instrument

The Lock Instrument screen is used to lock the instrument's front panel so users can not change any settings from the front panel. The lock instrument screen is shown if the instrument is unlocked and the password is set.

Lock/Unlock and Local/Remote Operation

If the instrument keyboard is locked via the front panel using Password > Lock Instrument > Lock Front Panel, the instrument reports being in Remote mode. In this mode, the keypad is locked, data can be viewed but

not changed using the front panel interface, and the remote "Set" commands are active.

If the instrument keyboard is unlocked via the front panel using Password > Unlock Instrument > Enter The Password, the instrument reports being in Local mode, the front panel interface is unlocked, and data can be changed from the front panel. In this mode the instrument does not process the remote "Set" commands.

Refer to "C-Link Protocol Commands" appendix for detailed information about "mode," "allow mode," and "power up mode" commands.

In the Main Menu, choose Password > **Lock Instrument**.

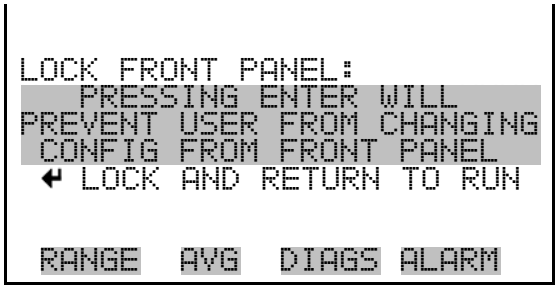

Change Password

The Change Password is used to set or change the password used to unlock the instrument's front panel. The change password screen is shown if the instrument is unlocked.

In the Main Menu, choose Password > **Change Password**.

Remove Password

The Remove Password screen is used to erase the current password and disable password protection. The remove password screen is shown if the instrument is unlocked and the password set.

In the Main Menu, choose Password > **Remove Password**.

Unlock Instrument

The Unlock Instrument screen is used to enter the password to unlock the front panel. The unlock instrument is shown if the instrument is locked.

In the Main Menu, choose Password > **Unlock Instrument**.

Chapter 4
Calibration

The Model 450*i* requires initial and periodic calibration according to the procedures described in this chapter. A quality control plan that allows the frequency and number of calibration points to be modified depending on calibration and zero/span check data should be implemented. Such a quality control program is essential to ascertain the accuracy and reliability of the air quality data collected. The data compiled for such a program might include items such as dates of calibration, atmospheric conditions, control settings and other pertinent data. For more detailed quality assurance guidelines, see the *Quality Assurance Handbook for Air Pollution Measurement Systems*, published by the U.S. EPA, Research Triangle Park, NC, 27711.

The following sections discuss the required apparatus and procedures for calibrating the instrument:

- "Zero Gas Generation" on page 4-1
- "Calibration Gas Generation" on page 4-2
- "Permeation Tube System" on page 4-4
- "Pre-Calibration" on page 4-5
- "Calibration in Single Range Mode" on page 4-7
- "Calibration in Dual Range and Auto Range Mode" on page 4-12
- "Zero/Span Check" on page 4-13

Zero Gas Generation

A zero air source, such as a Thermo Fisher Scientific *Model 111 Zero Air Supply* or *Model 1160 Zero Air Supply*, free of contaminants such as SO_2 and H_2S (< 0.0005 ppm) is required for the proper calibration and checkout of the instrument. There are several methods that are acceptable to generate this zero gas.

Commercial Heatless Air Dryers

Commercial heatless air dryers filled with a mixed bed of activated charcoal and a 13X molecular sieve have been found effective in removing SO_2 from compressed air. The use of this type of zero gas system is recommended when minimum maintenance is of prime importance. This system requires

a source of compressed air. Refer to the manufacturer's recommendations for installation of such a system.

Absorbing Column

An absorbing column packed with activated charcoal is acceptable for scrubbing SO_2 from ambient air. Ambient air is forced through a laboratory gas absorption column packed with the charcoal and the SO_2 is removed to acceptable levels (<0.0005 ppm). The charcoal should be changed at a minimum of every six months. It may be necessary to change the charcoal more frequently depending on local conditions.

Calibration Gas Generation

A calibration gas system capable of providing accurate levels of SO_2 and H_2S calibration gas between zero and 80% of the full-scale range is required. The calibration system must provide a flow rate of at least 1.5 LPM for an instrument with the standard flow (instruments with higher flow rates will require a higher minimum calibration system flow rate). All calibration gas should be derived from local or working standards (such as cylinders of compressed gas or permeation devices) that are certified as traceable to an NIST primary standard.

Cylinder Gas Dilution

A cylinder gas dilution system, shown in **Figure 4–1**, can be constructed. All connections between components in the system should be made with glass, Teflon®, or other non-reactive material.

The air flow controller should be capable of maintaining a constant air flow within ±2% of the required flow rate. The SO_2 flow controller should be capable of maintaining constant SO_2 flows within ±2% of the required flow rate. Ensure both flow controllers are properly calibrated. The pressure regulator for the standard SO_2 cylinder must have a non-reactive diaphragm and internal parts and a suitable delivery pressure.

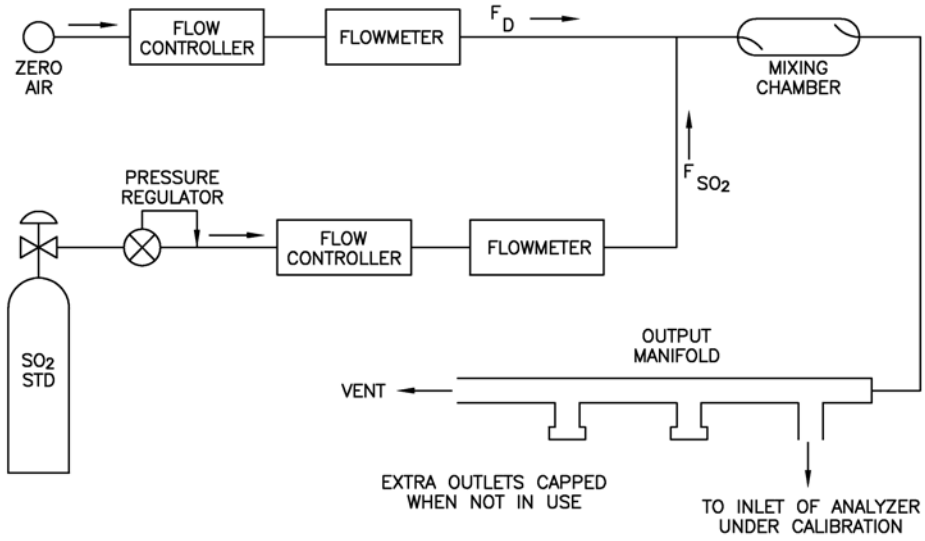

Figure 4–1. Cylinder Gas Dilution System

The exact SO_2 concentration is calculated from:

$$[SO_2]_{OUT} = \frac{[SO_2]_{STD} \, x \, F_{SO_2}}{F_D + F_{SO_2}}$$

Where:

$[SO_2]_{OUT}$ = diluted SO_2 concentration at the output manifold, ppm

$[SO_2]_{STD}$ = concentration of the undiluted SO_2 standard, ppm

F_{SO2} = flow rate of the SO_2 standard corrected to 25 °C and 760 mm Hg

F_D = flow rate of the dilution air corrected to 25 °C and 760 mm Hg

Note The same dilution system may be used for H_2S by swapping out the SO_2 cylinder for an H_2S cylinder. ▲

Commercial Precision Dilution Systems

Commercial precision dilution systems are available which reliably and accurately dilute a high concentration gas mixture to provide a reliable span gas. A high concentration (50 ppm) of SO_2 or H_2S in air is precisely diluted to the concentration range required.

The Thermo Fisher Scientific *Model 146 Multigas Calibration System* is one such system for precision dilution.

Permeation Tube System

Permeation tube systems which precisely maintain a set temperature to within ±0.1 °C and hold a zero air flow rate to within ±0.5% can be used for generation of span gas. The flow rate of the permeation system must be at least 0.5 LPM for proper operation.

A permeation tube system, shown in **Figure 4–2** can be constructed. All connections between components in the system should be made with glass, Teflon®, or other non-reactive material.

The air flow controllers should be capable of maintaining a constant air flow within ±2% of the required flow rate. Ensure all devices are properly calibrated and that all flows are corrected to 25 °C and 750 mm Hg.

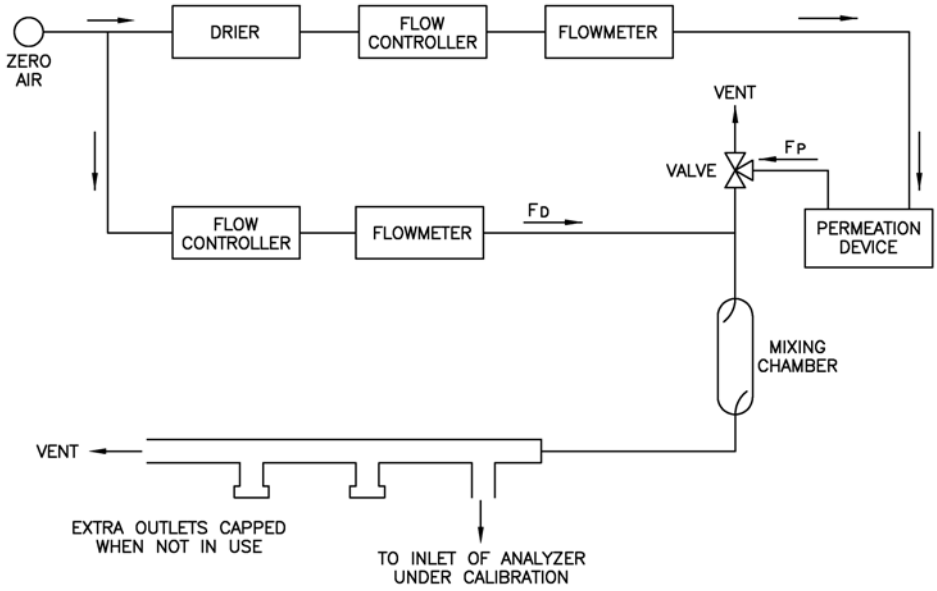

Figure 4–2. Permeation Tube System

The SO_2 output level is calculated from:

$$[SO_2]_{OUT} = \frac{P \times K}{F_T}$$

Where:

$[SO_2]_{OUT}$ = SO_2 output concentration in ppb

P = permeation rate in ng/min

F_T = total flow rate of gas after mixing chamber (F_P + F_D) in liters/minute

K (SO_2) = 0.382 constant for SO_2 permeant

The H_2S output level is calculated from:

$$[H_2S] = \frac{P \times K}{F_T}$$

Where:

$[H_2S]_{OUT}$ = H_2S output concentration in ppb

P = permeation rate in ng/min

F_T = total flow rate of gas after mixing chamber (F_P + F_D) in liters/minute

K (H_2S) = 0.717 constant for H_2S permeant

Commercial Permeation Systems

Commercial permeation systems, such as the Thermo Fisher Scientific *Model 146 Multigas Calibration System*, are available for this requirement. Refer to the instrument instruction manual for more information. An internal permeation span source option is also available for this instrument. Refer to "Internal Permeation Span Source" on page 9-3.

Pre-Calibration

There are a number of conditions which should be met prior to a calibration or a zero/span check. First, the instrument should have at least 30 minutes to warm up and stabilize. Second, the range used during the calibration or zero/span check should be the same as that used during normal monitoring. Third, all operational adjustments to the instrument should be completed prior to calibration. Fourth, all parts of the gas flow system, such as sample lines, and particulate filters, which are used in normal monitoring should also be used during calibration. Finally, it is recommended that the recording devices and outputs used during normal monitoring be calibrated prior to the instrument calibration and that they be used during the calibration or the zero/span check.

Perform the following pre-calibration procedure before calibrating the Model 450*i*. For detailed information about the menu parameters and the icons used in these procedures, see the "Operation" chapter.

Note The calibration and calibration check duration times should be long enough to account for the transition (purge) process when switching from sample to zero and from zero to span. This transition time is the time required to purge the existing air. ▲

Depending on the plumbing configuration and the instrument, data from approximately the first minute of a zero calibration or check should be disregarded because of residual sample air. Also, data from approximately the first minute of a span calibration or check should be disregarded because the span is mixing with the residual zero air. ▲

1. Allow the instrument to warm up and stabilize.

2. Be sure the instrument is in the auto mode, that is, SO_2, H_2S, and CS measurements are being displayed on the front panel display. If the instrument is not in auto mode:
   a. Press [■] to display the Main Menu, then choose Instrument Controls > **Auto/Manual Mode**.
   b. Select **SO_2/CS** and press [↵].
   c. Press [▸] to return to the Run screen.

Note Does not apply if selective SO_2 Scrubber option is installed since only H_2S can be measured with this option. ▲

3. Select SO_2, H_2S, and CS ranges. For more information about the ranges, see the "Operation" chapter.
   a. Press [■] to display the Main Menu, then choose Range > **Gas Units, SO2 Range, H2S Range, CS Range, or Set Custom Ranges**.
   b. Select concentration range, and press [↵].
   c. Press [▸] to return to the Run screen.

4. Select the Averaging Time. It is recommended that a higher averaging time be used for best results. For more information about the averaging time, see the "Operation" chapter.
   a. Press [■] to display the Main Menu, then choose **Averaging Time**.
   b. Select **300**, and press [↵].
   c. Press [▸] to return to the Run screen.

Note The averaging time should be less than the zero duration and less than the span duration. ▲

5. Verify that any filters used during normal monitoring are also used during calibration.

6. If required, connect the analog/digital outputs, serial port, or Ethernet port to a strip chart recorder(s) or PC(s).

Calibration in Single Range Mode

The following procedure calibrates the analyzer using the zero gas generator and calibration gas generator described previously in this chapter. It is suggested that a calibration curve have at least seven points between the zero and full scale concentrations. Although the seven-point curve is optional, two of whatever number of points is chosen should be located at the zero and 90% levels and the remaining points equally spaced between these values.

Note When the instrument is equipped with internal zero/span and sample valves, the ZERO and SPAN ports should give identical responses to the SAMPLE port when test gases are introduced. The user should calibrate the instrument using the SAMPLE port to introduce the zero and span gas sources. After calibration, the zero and span sources should be plumbed to the appropriate ports on the rear panel of the instrument, and then reintroduced to the instrument. The instrument should give identical responses to the test gases whether they are introduced via the SAMPLE port or the ZERO or SPAN ports. If not, the plumbing and/or valves should be serviced. ▲

Calibration

Use the following procedure to calibrate the instrument. This includes:

- Set SO_2 and CS Backgrounds to Zero
- Calibrate SO_2
- Calibrate CS
- Calibrate H_2S

Set SO_2 and CS Backgrounds to Zero

The SO_2 and CS background corrections are determined during zero calibration. The background signal is the combination of electrical offsets, PMT dark current, and trace substances undergoing fluorescence. For more detailed information, see “Calibrate SO_2 and CS Backgrounds” in the “Operation” chapter.

Use the following procedure to set the SO_2 background. Both the SO_2 and CS (Combined Sulfur) background screens operate the same way, and the following procedure also applies to the CS background screen.

Note The SO_2 channel background should be calibrated first and then calibrate the CS channel. ▲

For detailed information about the menu parameters and the icons used in these procedures, see the "Operation" chapter.

1. If the instrument is equipped with the optional zero/span and sample valves, connect the zero and span gas to the rear panel bulkheads labeled ZERO and SPAN, otherwise connect a source of vented zero air to the SAMPLE bulkhead.

Note Do not use nitrogen for zero air. ▲

[▶] is used to activate the zero and span valves. The lower left-hand corner of the Run screen indicates which mode is active: ZERO, SPAN (and SPAN 2 if the dual span option is installed), or SAMPLE.

2. To ensure that the zero air is being measured at atmospheric pressure, check that the zero air flow reported by the analyzer is approximately 0.5 LPM. Actual zero air flow should be 0.8 LPM or more, with the excess flowing out the atmospheric bypass.
   a. From the Run screen, press [■] to display the Main Menu.
   b. From the Main Menu, choose Diagnostics > **Flow** to display the Sample Flow screen.
   c. Make sure that the reported sample flow is less than the actual zero air flow.

3. Monitor the zero air reading and wait for the readings to stabilize.

4. From the Main Menu, choose **Calibration** to display the Calibration menu.

5. At the Calibration menu, press [↵] to display the SO_2 Background screen, after 10 minutes of zero air and when the readings are stable, press [↵] to set the SO_2 reading to zero.

   The display flashes the message "SAVING", and the SO_2 reading is added to the background correction. Record the stable zero air reading as Z_{SO2}.

6. Press [■] to return to the Calibration menu, press [↓] [↵] to display the CS Background screen, and repeat Step 5 for the CS background.

7. Press [ ] to return to the Calibration menu.

Calibrate SO_2

Use the following procedure to calibrate the SO_2 channel to the SO_2 calibration gas.

1. Allow the analyzer to sample the SO_2 calibration gas of approximately 80% of the full-scale range until the SO_2, H_2S, and CS readings have stabilized.

2. When the responses stabilize, from the Main Menu, choose Calibration > **Cal SO2 Coefficient**.

   The SO_2 line of the Calibrate SO_2 screen displays the current SO_2 concentration. The SPAN CONC line of the display is where you enter the SO_2 calibration gas concentration.

   Enter the concentration of SO_2 calibration gas. Use [ ][ ] to move the cursor left and right and use [ ][ ] to increment and decrement the numeric character at the cursor.

   The exact SO_2 concentration is calculated from:

$$[SO_2]_{OUT} = \frac{[SO_2]_{STD} \, x \, F_{SO_2}}{F_D + F_{SO_2}}$$

   Where:

   $[SO_2]_{OUT}$ = diluted SO_2 concentration at the output manifold, ppm

   $[SO_2]_{STD}$ = concentration of the undiluted SO_2 standard, ppm

   F_{SO2} = SO_2 flow

   F_D = dilution flow

3. Press [ ] to calculate and save the new SO_2 coefficient based on the entered span concentration.

The SO_2 recorder response will equal:

$$\text{Recorder response (\% scale)} = \frac{[SO_2]_{OUT}}{\text{URL}} \times 100 + Z_{SO_2}$$

Where:

URL = upper range limit of the analyzer's operating range

Z_{SO2} = analyzer response to zero air, % fullscale

4. Record the $[SO_2]_{OUT}$ concentration and the analyzer SO_2 response as indicated by the recorder response.

Calibrate CS

Use the following procedure to calibrate the CS channel to the CS calibration gas.

1. Press [ ] to return to the Calibration menu, and choose **Cal CS Coefficient**.

2. Verify that the CS calibration gas concentration is the same as the SO_2 calibration gas concentration plus any known H_2S impurity.

   The CS line of the Calibrate CS screen displays the current CS concentration. The SPAN CONC line of the display is where you enter the CS calibration gas concentration.

   Enter the concentration of SO_2 calibration gas plus any known H_2S impurity. Use [ ] [ ] to move the cursor left and right and use [ ] [ ] to increment and decrement the numeric character at the cursor. The exact CS concentration is calculated from:

$$[CS]_{OUT} = \frac{F_{SO_2} \times ([SO_2]_{STD} + [H_2S]_{IMP})}{F_{SO_2} + F_D}$$

   Where:

   $[CS]_{OUT}$ = diluted CS concentration at the output manifold, ppm

   $[H_2S]_{IMP}$ = concentration of H_2S impurity in the standard SO_2 cylinder, ppm

3. Press [ ] to calculate and save the new CS coefficient based on the entered span concentration.

   The CS recorder response will equal:

$$\text{Recorder Response (\% scale)} = \frac{[CS]_{OUT}}{\text{URL}} \text{ x } 100 + Z_{CS}$$

Where:

URL = Nominal upper range limit of the CS channel, ppm

Z_{CS} = analyzer response to zero air, % full scale

4. Record the $[CS]_{OUT}$ concentration and the analyzer's CS response as indicated by the recorder response.

Calibrate H_2S

Use the following procedure to calibrate the H_2S channel to the H_2S calibration gas.

1. Allow the analyzer to sample the H_2S calibration gas until the SO_2, H_2S and CS readings have stabilized.

2. When the responses stabilize, from the Main Menu, choose Calibration > **Cal H2S Coefficient**.

   The H_2S line of the Calibrate H_2S screen displays the current H_2S concentration. The SPAN CONC line of the display is where you enter the H_2S calibration gas concentration.

3. Enter the concentration of H_2S calibration gas. Use ← → to move the cursor left and right and use ↑ ↓ to increment and decrement the numeric character at the cursor.

   The exact H_2S concentration is calculated from:

$$[H_2S]_{OUT} = \frac{[H_2S]_{STD} \, x \, F_{H_2S}}{F_D + F_{H_2S}}$$

   Where:

   $[H_2S]_{OUT}$ = diluted H_2S concentration at the output manifold, ppm

   $[H_2S]_{STD}$ = tank concentration, ppm

4. Press ↵ to calculate and save the new H_2S coefficient based on the entered span concentration.

   The H_2S recorder response will equal:

$$\text{Recorder response (\% scale)} = \frac{[H_2S]_{OUT}}{\text{URL}} \times 100$$

Where:

URL = upper range limit of the analyzer's operating range

5. Record the $[H_2S]_{OUT}$ concentration and the analyzer H_2S response as indicated by the recorder response.

Note It is important that the curve be linear within ±1% FS over the range. If the curve is nonlinear, the analyzer is not operating correctly, (possible leak, or converter failure, etc.), and should be serviced. Assuming the curve is linear, subsequent data should be reduced using this calibration curve response. ▲

Using the Calibration Factors menu can change the calibration factors. This is often useful in a troubleshooting situation. However, after the above calibration procedure is completed, all subsequent data reduction depends on the calibration parameters, remaining the same as during the initial calibration. ▲

Therefore, never change any calibration factor without first recording the value so that after any troubleshooting procedure is completed, the initial value can be re-entered thereby not altering the multipoint calibration. ▲

Calibration in Dual Range and Auto Range Mode

The dual/auto range calibration feature is used to calibrate the analyzer at two different span levels (as opposed to a single span level in the standard mode) generating a “tailored multi-point” calibration curve stored in the analyzer's memory. This feature may be used:

- When widely different gas levels are being monitored, such as a factor of 10 or greater apart
- If precision and span levels are being introduced using separate tanks
- If more than one multi-component cylinder is being used to calibrate the instrument

Properly designed fluorescence analyzers are inherently linear over a wide dynamic range; and under normal USEPA compliance situations this feature is not required. Dual calibration may be used for span levels less than a factor of 10 apart, however if this is done to correct for a significant

non-linearity, it may mask the problems causing the effect, such as, bad calibration cylinder, leaks in sampling lines, or low ozonator output.

Use the following procedure to calibrate the analyzer in dual or auto range mode.

Set SO_2 and CS Backgrounds to Zero

1. Follow the "Set SO_2 and CS Backgrounds to Zero" procedure on page 4-7.

Calibrate Low SO_2, H_2S, and CS

2. Follow the Calibrate SO_2, H_2S and CS procedures described previously in "Calibration in Single Range Mode" selecting **Cal Lo SO_2 Coefficient** to calibrate the low SO_2 channel to the low SO_2 calibration gas, **Cal Lo CS Coefficient** to calibrate the low CS channel to the low CS calibration gas, and **Cal Lo H_2S Coefficient** to calibrate the low H_2S channel to the low H_2S calibration gas.

Note The low channels should be calibrated first and then the high channels, due to conditioning of the measurement system with SO_2. ▲

Calibrate High SO_2, H_2S, and CS

3. Follow the "Calibrate SO_2, H_2S and CS procedures described previously in "Calibration in Single Range Mode" selecting **Cal Hi SO_2 Coefficient** to calibrate the high SO_2channel to the high SO_2 calibration gas, **Cal Hi CS Coefficient** to calibrate the high CS channel to the high CS calibration gas, **Cal Hi H_2S Coefficient** to calibrate the high H_2S channel to the high H_2S calibration gas.

Zero/Span Check

The zero/span check procedure is normally performed any time a quick check of the accuracy of the instrument is required. Normally, zero and span are checked daily. As experience is gained with the instrument, the frequency of these checks can be adjusted accordingly.

The span gas concentration used in the span check should be between 70% and 90% of the full-scale range. The zero and span drift should be measured and recorded prior to making any adjustments.

All gas must be supplied to the instrument at atmospheric pressure. It will be necessary to employ an atmospheric bypass plumbing arrangement to accomplish this.

If a filter is used, all gas must enter the instrument through the filter.

For detailed information about the menu parameters and the icons used in these procedures, see the "Operation" chapter.

Use the following procedure to check the zero/span.

1. If the instrument is equipped with the optional zero/span and sample valves, connect the zero and span gas to the rear panel bulkheads labeled ZERO and SPAN, otherwise connect a source of vented zero air to the SAMPLE bulkhead.

Note Do not use nitrogen for zero air. ▲

Use [▶] to activate the zero and span valves. The lower left-hand corner of the Run screen indicates which mode is active: ZERO, SPAN (and SPAN 2 if the dual span option is installed), or SAMPLE.

2. To ensure that the zero air is being measured at atmospheric pressure check that the flow reported by the analyzer is approximately 0.5 LPM. Actual zero air flow should be 0.8 LPM or more, with the excess flowing out the atmospheric bypass.
   a. From the Run screen, press [■] to display the Main Menu.
   b. From the Main Menu, select Diagnostics scroll to **Flow** and press [↵] to display the Sample Flow screen.
   c. Make sure that the reported sample flow is less than the actual zero air flow.

3. Press [▶] to monitor the zero air reading and wait for the reading to stabilize.

4. Record the measured SO_2 value as the zero drift since the last adjustment. If the zero has changed by more than ±15 ppb, it is recommended that a new calibration be performed.

5. Connect a source of vented span gas to the SAMPLE bulkhead. The span gas should be approximately 80% of the full-scale range.

6. To ensure that the span gas is being measured at atmospheric pressure check that the flow is approximately 0.5 LPM or more, with the excess flowing out the atmospheric bypass.

7. Press [▶] to monitor the span gas reading and wait for the reading to stabilize.

8. Record the difference between the measured SO_2 value and the actual SO_2 span concentration used. This is the span drift since the last

adjustment. If the calibration has changed by more than ±10%, a new calibration should be performed.

Chapter 5
Preventive Maintenance

This chapter describes the periodic maintenance procedures that should be performed on the instrument to ensure proper operation. Since usage and environmental conditions vary greatly, you should inspect the components frequently until an appropriate maintenance schedule is determined.

This chapter includes the following maintenance information and replacement procedures:

- "Safety Precautions" on page 5-1
- "Replacement Parts" on page 5-2
- "Cleaning the Outside Case" on page 5-2
- "Visual Inspection and Cleaning" on page 5-2
- "Cleaning the Mirrors" on page 5-2
- "Fan Filter Inspection and Cleaning on page 5-4
- "Sample Particulate Filter Inspection" on page 5-5
- "Lamp Voltage Check" on page 5-5
- "Leak Test" on page on page 5-6
- "Pump Rebuilding" on page 5-6

Safety Precautions

Read the safety precautions before beginning any procedures in this chapter.

WARNING If the equipment is operated in a manner not specified by the manufacturer, the protection provided by the equipment may be impaired. Do not attempt to lift the instrument by the cover or other external fittings. ▲

Equipment Damage Some internal components can be damaged by small amounts of static electricity. A properly ground antistatic wrist strap must be worn while handling any internal component. If an antistatic wrist strap is not available, be sure to touch the instrument chassis before touching any

internal components. When the instrument is unplugged, the chassis is not at earth ground. ▲

Equipment Damage Do not use solvents or other cleaning products to clean the outside case. ▲

Equipment Damage DO NOT attempt to clean the mirrors in the optical bench. These mirrors do not come in contact with the sample gas and should not be cleaned. Cleaning the mirrors can damage the mirrors. ▲

Replacement Parts

See the "Servicing" chapter for a list of replacement parts.

Cleaning the Outside Case

Clean the outside case using a damp cloth being careful not to damage the labels on the case.

Equipment Damage Do not use solvents or other cleaning products to clean the outside case. ▲

Visual Inspection and Cleaning

The instrument should be inspected occasionally for obvious visible defects, such as loose connectors, loose fittings, cracked or clogged Teflon® lines, and excessive dust or dirt accumulation. Dust and dirt can accumulate in the instrument and can cause overheating or component failure. Dirt on the components prevents efficient heat dissipation and may provide conducting paths for electricity. The best way to clean the inside of the instrument is to first carefully vacuum all accessible areas and then blow away the remaining dust with low pressure compressed air. Use a soft paint brush or cloth to remove stubborn dirt.

Cleaning the Mirrors

The mirrors located in the optical bench do not come in contact with the sample gas and DO NOT need cleaning. Read the Equipment Damage warning that follows.

Equipment Damage DO NOT attempt to clean the mirrors in the optical bench. These mirrors do not come in contact with the sample gas and should not be cleaned. Cleaning the mirrors can damage the mirrors. ▲

Capillary Inspection and Replacement

The capillary normally only requires inspection when instrument performance indicates that there may be a flow problem. A decreased sample flow may be an indication that a capillary is blocked.

Equipment Damage Some internal components can be damaged by small amounts of static electricity. A properly ground antistatic wrist strap must be worn while handling any internal component. If an antistatic wrist strap is not available, be sure to touch the instrument chassis before touching any internal components. When the instrument is unplugged, the chassis is not at earth ground. ▲

Use the following procedure to inspect and replace the capillary.

1. Turn the instrument OFF and unplug the power cord.

2. Remove the instrument cover.

3. Locate the capillary holder (**Figure 5–1**) and unscrew the knurled capillary nut.

Note The capillary used with the heated kicker option is located adjacent to the flow transducer. ▲

4. Remove the glass capillary (1.5-inch long x 0.020-inch OD x 0.013-inch ID) and O-ring . Refer to the “Replacement Parts List” in the “Servicing” chapter.

5. Check capillary for particulate deposits. Clean or replace as necessary.

6. Inspect O-ring for cuts or abrasion, and replace as necessary.

7. Replace capillary in the holder, making sure the O-ring is around the capillary before inserting it into the body.

8. Finger-tighten the capillary nut enough to ensure a tight seal.

9. Re-install the cover.

10. Connect the power cord and turn the instrument ON.

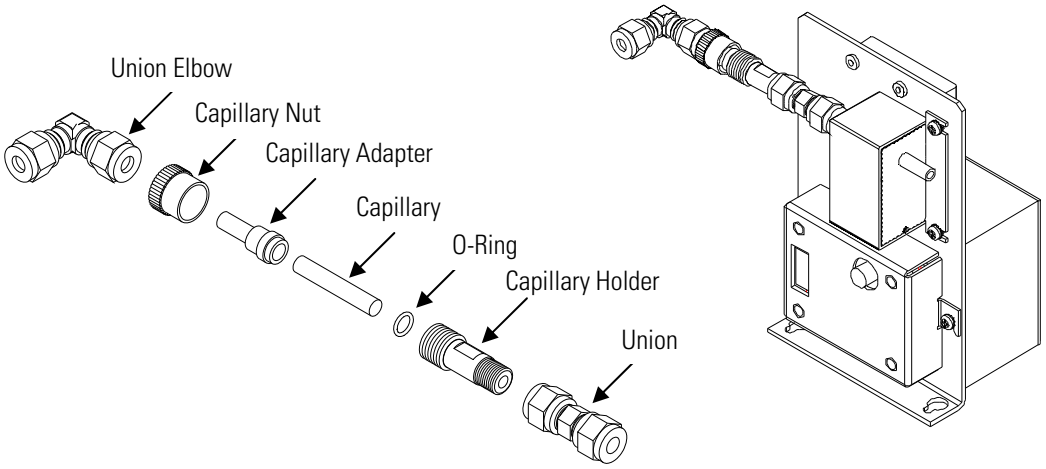

Figure 5–1. Inspecting and Replacing the Capillary

Fan Filter Inspection and Cleaning

Under normal use, the filter over the instrument fan located on the rear panel of the instrument should be cleaned and reconditioned at six-month intervals. If the instrument is operated in excessively dirty surroundings, this procedure should be instituted on a more frequent schedule. Use the following procedure to inspect and clean the fan filter (**Figure 5–2**).

Equipment Required:

Fan

Fan filter

1. Remove the fan guard and filter from the rear of the instrument by unsnapping it.

2. Replace the filter as appropriate or flush the filter with warm water and let dry (a clean, oil-free purge will help the drying process) or blow the filter clean with compressed air.

3. Re-install the filter and fan guard.

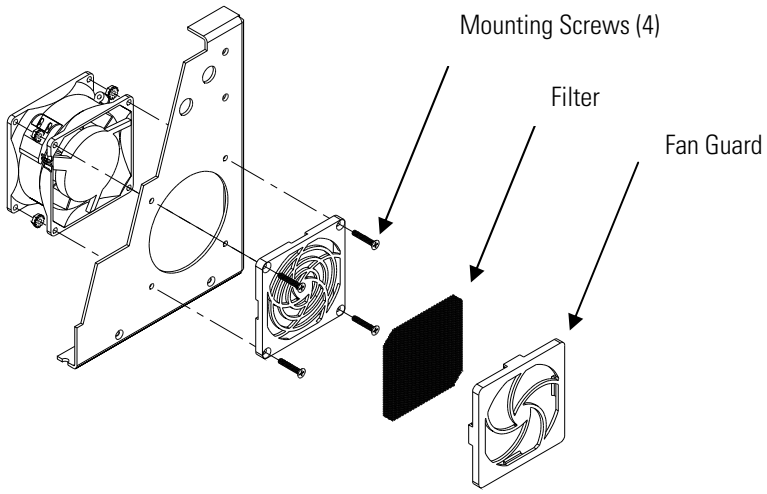

Figure 5–2. Inspecting and Cleaning the Fan

Sample Particulate Filter Inspection

If a sample pre-filter is used, it should be inspected regularly for excessive dust and particulates which will restrict flow. Replace the sample filter as necessary.

Lamp Voltage Check

The instrument is equipped with a lamp voltage control circuit, which automatically corrects for degradation of the flash lamp. However, after several years of use, the lamp may have degraded to the point that is being driven with the maximum voltage that the power supply can deliver.

Use the following procedure to check the lamp voltage.

1. Press [■] to display the Main Menu.

2. From the Main Menu, select Diagnostics > Voltages > **Interface Board** and press [↵] to display the Interface Board Voltages screen

3. Check the flash supply voltage. If this voltage is at 1200 V, it is necessary to either replace the lamp or adjust the lamp voltage control circuit.

   For detailed information about this screen, refer to the “Operation” chapter. For more information about replacing the lamp or adjusting the lamp voltage control circuit, see the “Servicing” chapter.

Leak Test

A normal flow rate is approximately 1.2 LPM. If the flow rate is less than 0.85 LPM, use the following procedure to perform a leak test.

1. Block the SAMPLE bulkhead on the rear panel with a leak-tight cap.
2. Wait two minutes.
3. Press [▮] to display the Main Menu.
4. Press [↓] to move the cursor to Diagnostics and press [↵] to display the Diagnostics menu.
5. Press [↓] to move the cursor to Flow and press [↵] to display the Sample Flow screen. The flow reading should indicate zero flow.
6. Press [▮] to display the Diagnostics Menu, then press [↑] to move the cursor to Pressure and press [↵] to display the Pressure screen. The pressure reading should be less than 180 mm Hg. If not, check to see that all fittings are tight and that none of the input lines are cracked or broken. For detailed information about these screens, refer to the "Operation" chapter.
7. If the instrument passes the leak test, but still has low flow, check the capillary for blockage.
8. If the flow drops to zero during the flow check, but the pressure is above 250 mm Hg, the pump may need to be rebuilt.

Pump Rebuilding

Use the following procedure to rebuild the pump (**Figure 5–3**). To replace the pump, see "Pump Replacement" in the "Servicing" chapter.

Equipment Required:

Flatblade screwdriver

Pump rebuild kit (flapper valve and diaphragm)

Equipment Damage Some internal components can be damaged by small amounts of static electricity. A properly ground antistatic wrist strap must be worn while handling any internal component. If an antistatic wrist strap is not available, be sure to touch the instrument chassis before touching any

internal components. When the instrument is unplugged, the chassis is not at earth ground. ▲

1. Turn instrument OFF, unplug the power cord, and remove the cover.

2. Loosen the fittings and remove both lines going to the pump.

3. Remove the four screws from the top plate, remove top plate, flapper valve, and the bottom plate (**Figure 5–3**).

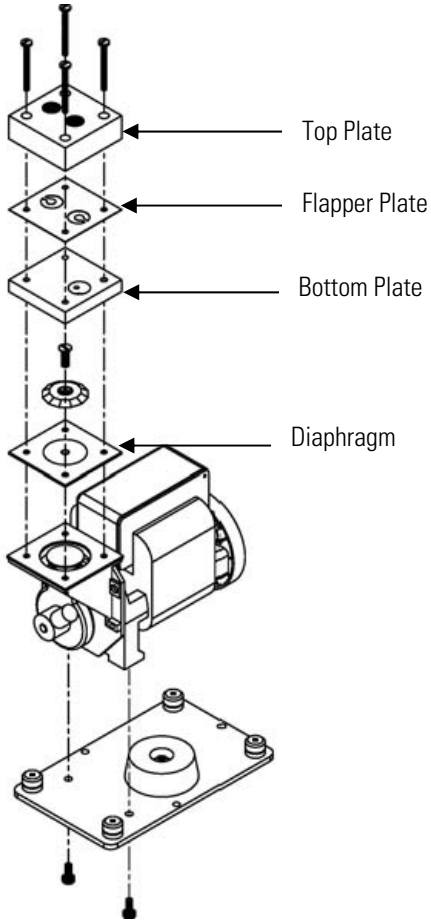

Figure 5–3. Rebuilding the Pump

4. Remove the screw the securing the diaphragm to piston and remove diaphragm.

5. Assemble the pump by following the previous steps in reverse, make sure the Teflon® (white) side of the diaphragm is facing up and that the flapper valves cover the holes of the top and bottom plate.

6. Check that the flow reads approximately 1.2 LPM when power is turned ON.

7. Perform a leak test as described in this chapter.

Chapter 6
Troubleshooting

This instrument has been designed to achieve a high level of reliability. In the rare event of problems or failure, the troubleshooting guidelines, board-level connection diagrams, connector pin descriptions, and testing procedures presented in this chapter should be helpful in isolating and identifying problems.

For additional fault location information refer to the “Preventive Maintenance” chapter in this manual.

The service mode, described in the “Operation” chapter, includes parameters and functions that are useful when making adjustments or diagnosing problems.

The Technical Support Department at Thermo Fisher Scientific can also be consulted in the event of problems. See “Service Locations” at the end of this chapter for contact information. In any correspondence with the factory, please note both the serial number and program number of the instrument.

This chapter provides the following troubleshooting and service support information:

- “Safety Precautions” on page 6-1
- “Troubleshooting Guides” on page 6-1
- “Board-Level Connection Diagrams” on page 6-10
- “Connector Pin Descriptions” on page 6-12
- “Service Locations” on page 6-25

Safety Precautions

Read the safety precautions in the Preface and the “Servicing” chapter before performing any actions listed in this chapter.

Troubleshooting Guides

The troubleshooting guides presented in this chapter are designed to help isolate and identify instrument problems.

Table 6–1. Troubleshooting - Power-Up Failures, **Table 6–2.** Troubleshooting - Calibration Failures, and **Table 6–3.** Troubleshooting -

Measurement Failures provide general troubleshooting information and indicate the checks that you should perform if you experience an instrument problem.

Table 6–4. Troubleshooting - Alarm Messages lists all the alarm messages you may see on the display and provides recommendations about how to resolve the alarm condition.

Table 6–1. Troubleshooting - Power-Up Failures

Malfunction	Possible Cause	Action
Does not start (The backlight on the display does not come on and the pump motor is not running.)	No power or wrong power configuration	Check the line to confirm that power is available and that it matches the voltage and frequency configuration of the instrument.
	Main fuse is blown or missing	Unplug the power cord, open the fuse drawer on the back panel, and check the fuses visually or with a multimeter.
	Bad switch or wiring connection	Unplug the power cord, disconnect the switch and check operation with a multimeter.
Display does not come on. (Pump is running.)	DC power supply failure	Check the green LED on the back edge of the power supply. If the LED is off, the supply has failed.
	DC power distribution failure	Check surface mount LEDs labelled "24V PWR" on the motherboard and the interface board. If lit, power is OK.
	Display failure	If possible, check instrument function through RS-232 or Ethernet. Contact Thermo Fisher Scientific Service Department.
Power comes on and the display functions, but the pump is not running.	AC power is not reaching the pump.	Locate the three-pin connector on the interface board and use a voltmeter to check AC voltage across the two black wires (should read 110 - 120V, even on 220V or 100V instruments).
	Pump is jammed due to a new or stiff diaphragm.	Carefully rotate the pump fan to get past sticking point.
	Pump bearings have failed.	Disconnect AC power and remove the gas lines from the pump head, then try to rotate the pump fan. If it is jammed, or noisy, the motor bearings may have failed.

Table 6–2. Troubleshooting - Calibration Failures

Malfunction	Possible Cause	Action
Cannot zero instrument or there is a high background signal when sampling zero air. (Zero air should produce a reading equivalent to less than 0.015 ppm SO_2.)	Zero air system is faulty, needs new SO_2 scrubbers or requires maintenance.	Test against an ultra-zero cylinder from a reputable scientific gas supplier or check effect of a new chromatography grade activated charcoal scrubber installed at the instrument inlet.
	Zero air flow rate is inadequate.	Check by-pass or atmospheric pressure vent to verify that the zero air system is providing more flow than the instrument is drawing.
	Instrument is not drawing in span gas.	Check sample Flow and Pressure readings on the Diagnostics screen.
		Use an independent flow meter to check flows at the sample inlet and exhaust bulkheads (they should match).
		Perform a leak test, as described in the "Preventive Maintenance" chapter.
	Span gas containing SO_2, NO, or a hydrocarbon is contaminating system.	Verify that span gases connected to the calibration system are shut off and leak-tight.
	Internal or external lines, filters, and other sample handling equipment are contaminated or dirty.	Replace inlet filter (if installed) and as much of the tubing as possible.
	Hydrocarbon kicker has failed.	Replace the hydrocarbon kicker.
	High scattered light	Go to Instrument Controls, select Flash Lamp and toggle to OFF. If the previously high signal drops to zero or less when the flash lamp is off, the problem may be caused by scattered light from dust in the optical bench. If so, carefully clean the optical bench.
	Input board failure	Disconnect the input board from the interface board by unplugging ribbon cable labelled "INPUT." The instrument reading should drop to zero or to a negative value.

Malfunction	Possible Cause	Action
Instrument appears to zero, but there is weak or no response to span gas.	Span cylinder empty	Check the source pressure.
	Calibration system failure	Check solenoids or other hardware to be sure that span gas is being delivered.
	Flow rate of the diluted span mix is inadequate.	Check by-pass or atmospheric vent to verify that the zero air system is providing more flow than the instrument draws.
	Instrument is not drawing in span gas.	Check sample Flow and Pressure readings on the Diagnostics screen.
		Use an independent flow meter to check flows at the sample inlet and exhaust bulkheads (they should match).
		Perform a leak test, as described in the "Preventive Maintenance" chapter.
	SO_2 is being absorbed by tubing, filters, or dirt in the calibration system.	Replace any lines made of vinyl or other plastics with fresh Teflon or stainless steel. Replace Teflon filter membranes that look dirty. Remove any filters that are not Teflon membranes.
	Flash lamp has failed.	Listen for the rapid clicking of the flash lamp. Check the flash lamp voltage and intensity.
	PMT or input board has failed.	Check the PMT voltage and run the optical span test. A good optical span test indicates that the PMT is OK and that the problem is more likely the flash lamp.
Zero or Span will not stabilize.	Flow rate of the diluted span mix is inadequate.	Check by-pass or atmospheric pressure vent to verify that the zero air system is providing more flow than the instrument is drawing.
	Instrument is not drawing in span gas.	Check sample Flow and Pressure readings on the Diagnostics screen.
		Use an independent flow meter to check flows at the sample inlet and exhaust bulkheads (they should match).
		Perform a leak test, as described in the "Preventive Maintenance"

Malfunction	Possible Cause	Action
		chapter.
	SO_2 is being absorbed and released by dirt in the tubing or filters of the calibration system, or contamination inside the instrument.	Replace any lines made of vinyl or other plastics with fresh Teflon or stainless steel. Replace Teflon filter membranes that look dirty. Remove any filters that are not Teflon membranes.
	Averaging time is not set correctly.	Check the Averaging Time in Main Menu. If too high, the unit will be slow to stabilize. If too low, the signal may appear noisy.
	PMT high voltage power supply failure	Check the PMT high voltage power supply voltage. This voltage should be about -600 volts (violet wire is positive).
	Flasher lamp	Replace with known good lamp to see if the lamp is the problem.

Table 6–3. Troubleshooting - Measurement Failures

Malfunction	Possible Cause	Action
Reduced response or no response to sample gas with alarm(s) indicated.	Undefined electronic failure or pump failure	Check alarm screens and the diagnostic voltage screen to localize fault.
		Check the response to known span gas.
		Run an optical span test.
	Instrument is not drawing in sample as expected.	Check sample Flow and Pressure readings on the Diagnostics screens.
		Use an independent flow meter to check flows at the sample inlet and exhaust bulkheads (they should match).
		Perform a leak test, as described in the "Preventive Maintenance" chapter.
Reduced response or no response to sample gas with no alarms indicated.	Instrument is not drawing in sample as expected.	Check sample Flow and Pressure readings on the Diagnostics screen.
		Use an independent flow meter to check flows at the sample inlet and exhaust bulkheads (they should match).
		Perform a leak test, as described in the

Malfunction	Possible Cause	Action
		"Preventive Maintenance" chapter.
		Check the external plumbing for leaks or other problems.
		Check all external plumbing and the source of the sample to verify that the SO_2 is not being adsorbed by the sampling system. Lines carrying SO_2 must be made from clean Teflon or stainless steel.
	Detection circuit failure	Go to Diagnostics menu and run the optical span test to verify PMT and associated electronics.
	Instrument is not properly calibrated.	Go to the Calibration Factors menu and verify that the SO_2 Background and SO_2 Coefficient are set appropriately.
	Input board malfunction	Go to Service Menu and select Input Board Test to verify A/D signal on each range.
	Signal cable failure	While viewing the Input Board Test screen, set the gain to 100 and then disconnect the signal cable from the input board. The signal should drop from a value above 1000 to near zero.
	PMT failure	Check the PMT voltage (Service menu).
	Flash lamp assembly failure	Check the lamp voltage (Service menu).
Span calibration coefficient outside acceptable limits of 0.5 – 2.0.	Bad span gas	Verify quality of span gas.
	System leak	Perform leak test.
	Insufficient calibrator flow	Verify calibrator is providing a flow of at least 0.8 LPM.
Excessive noise or spikes on analog outputs	Defective or low sensitivity PMT	Check PMT voltage and run an optical span test. Replace PMT with known good unit if possible.
	Defective input board or BNC connection	Identify the defective component and replace.
	Noise pick-up by recorder or data logger	Check analog cable shielding and grounding.
		Try to localize source of noise by comparing analog signal to data collected through RS-232 or Ethernet.
Poor linearity	Problem with calibrator	Verify accuracy of the multipoint calibration system with an independent flow meter.

Malfunction	Possible Cause	Action
	Problem with input board range switching	Go to the Input Board Test screen (Service menu) and step through each range while the instrument samples a known stable source of SO_2.
		Stay on the Input Board Test screen, and while holding instrument on the lowest gain, step the calibrator through all SO_2 levels.
		Manually plot signal vs. concentration to verify linearity.
	Leak in sample probe line	Check for variable dilution.
Excessive response time	Averaging time is not set correctly.	Go to Averaging Time (Main Menu) and verify setting.
	Instrument is not drawing in sample at normal flow rate.	Check sample Flow and Pressure readings on the Diagnostics screens.
		Use an independent flow meter to check flows at the sample inlet and exhaust bulkheads (they should match).
		Perform a leak test, as described in the "Preventive Maintenance" chapter.
	SO_2 is being absorbed and/or released by dirt in the tubing or filters of the sampling system, or inside the instrument.	Replace any lines made of vinyl or other plastics with fresh Teflon or stainless steel.
		Replace Teflon filter membranes that look dirty.
		Remove any filters that are not Teflon membranes.
Analog signal doesn't match expected value.	Software has not been configured.	Verify that the selected analog output has been properly configured to match the data system.
	Analog output goes above full-scale value or below zero	By default, a 5% over and underrange on the analog outputs is provided. If this is not desirable due to system restrictions, it may be turned off in the INSTRUMENT CONTROLS > I/O CONFIGURATION > ANALOG OUTPUT CONFIG screens.
	Recorder is loading down output.	Verify that the recorder or data logger input impedance meets minimum requirements.
Flow meter fluctuations	Dirty pump diaphragm	Clean or replace pump diaphragm.

Malfunction	Possible Cause	Action
	Capillary blocked	Clean or replace capillary.
	Clogged Teflon line	Inspect all sample lines.

Table 6–4. Troubleshooting - Alarm Messages

Alarm Message	Possible Cause	Action
Alarm - Internal Temp	Instrument overheating	Replace fan if not operating properly.
		Clean or replace foam filter, refer to the "Preventive Maintenance" chapter in this manual.
		Check 10K thermistor on measurement interface board, replace if bad.
Alarm - Chamber Temp	Chamber temperature below set point	Check 10K thermistor, replace if bad.
		Check temperature control board to insure the LEDs are coming on. If not, temperature control board could be defective.
	Heaters have failed	Check connector pins for continuity.
Alarm - Converter Temp	Converter temperature below set point	Molybdenum converter case should be hot to the touch, if not the heater may have failed. Check that converter temp. set point is approximately 350 degrees C.
		Check that voltage to the heater is 115 VAC.
		Check that CONV HTR LED on temperature control board on rear panel is ON, if not check connections to measurement interface board and replace temperature control board.
	Heater has failed	Check connector pins for continuity.
Alarm - Pressure	Pressure high	Check tubing going to pressure sensor.
		Check plumbing for leaks.
		Check the pump for a tear in the diaphragm, replace with pump repair kit if necessary. Refer to the "Preventive Maintenance" chapter in this manual.
		Check that capillary is properly installed and O-ring is in good shape. Replace if necessary.
	Pressure low	Check electrical cabling between pressure sensor and measurement interface board. Replace pressure sensor.
Alarm - Flow	Flow low	Check sample capillary for blockage. Replace as necessary.

Alarm Message	Possible Cause	Action
		If using sample particulate filter make sure it is not blocked. Disconnect sample particulate filter from the sample bulkhead, if flow increases, replace the filter.
		Perform leak test to check for internal leaks.
	Flow high	When delivering zero air or gas to the instrument, use an atmospheric dump.
Alarm - Intensity	Low - lamp is failing	Check that the lamp and trigger pak are securely fastened.
		Replace lamp.
Alarm - Lamp voltage	Low voltage (<750V) – lamp power supply has failed	Replace the lamp power supply.
	High voltage (>1200V) - flash lamp failed	Replace the flash lamp.
Alarm - SO_2 Conc.	Concentration has exceeded range limit	Check to insure range corresponds with expected value. If not, select proper range.
	Concentration low	Check user-defined low set point, be sure the min trigger is set as desired.
Alarm - Zero Check Alarm - Span Check	Instrument out of calibration	Recalibrate instrument.
Alarm - Zero Autocal Alarm - Span Autocal	Instrument out of calibration	Check gas supply. Perform manual calibration.
Alarm - Motherboard Status Alarm - Interface Status Alarm - I/O Exp Status	Internal cables not connected properly Board is defective	Check that all internal cables are connected properly. Recycle AC power to instrument. If still alarming, change board.

Board-Level Connection Diagrams

Figure 6-1 and **Figure 6-2** are board-level connection diagrams for the common electronics and measurement system. These illustrations can be used along with the connector pin descriptions in **Table 6–5** through **Table 6–13** to troubleshoot board-level faults.

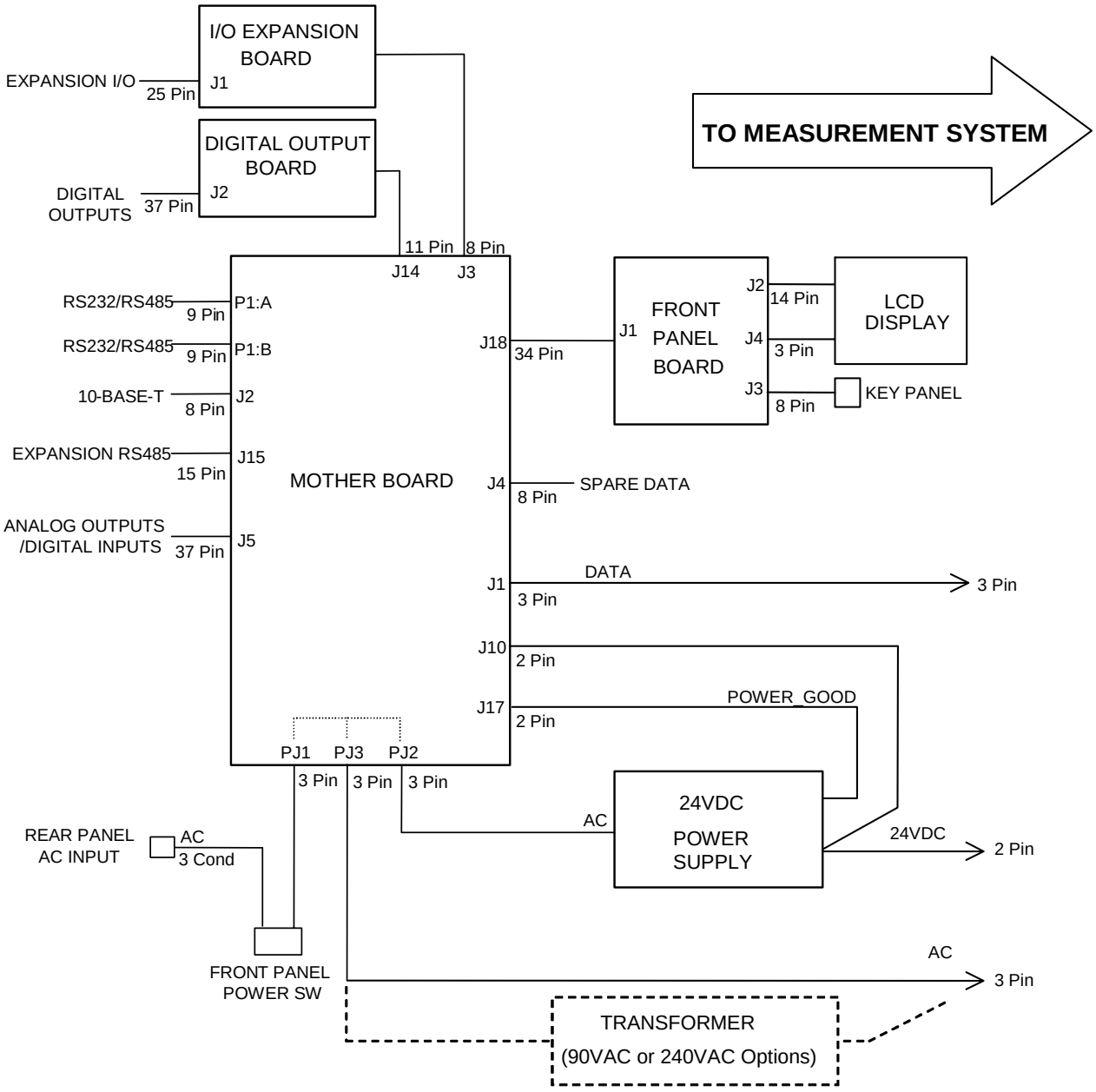

Figure 6–1. Board-Level Connection Diagram - Common Electronics

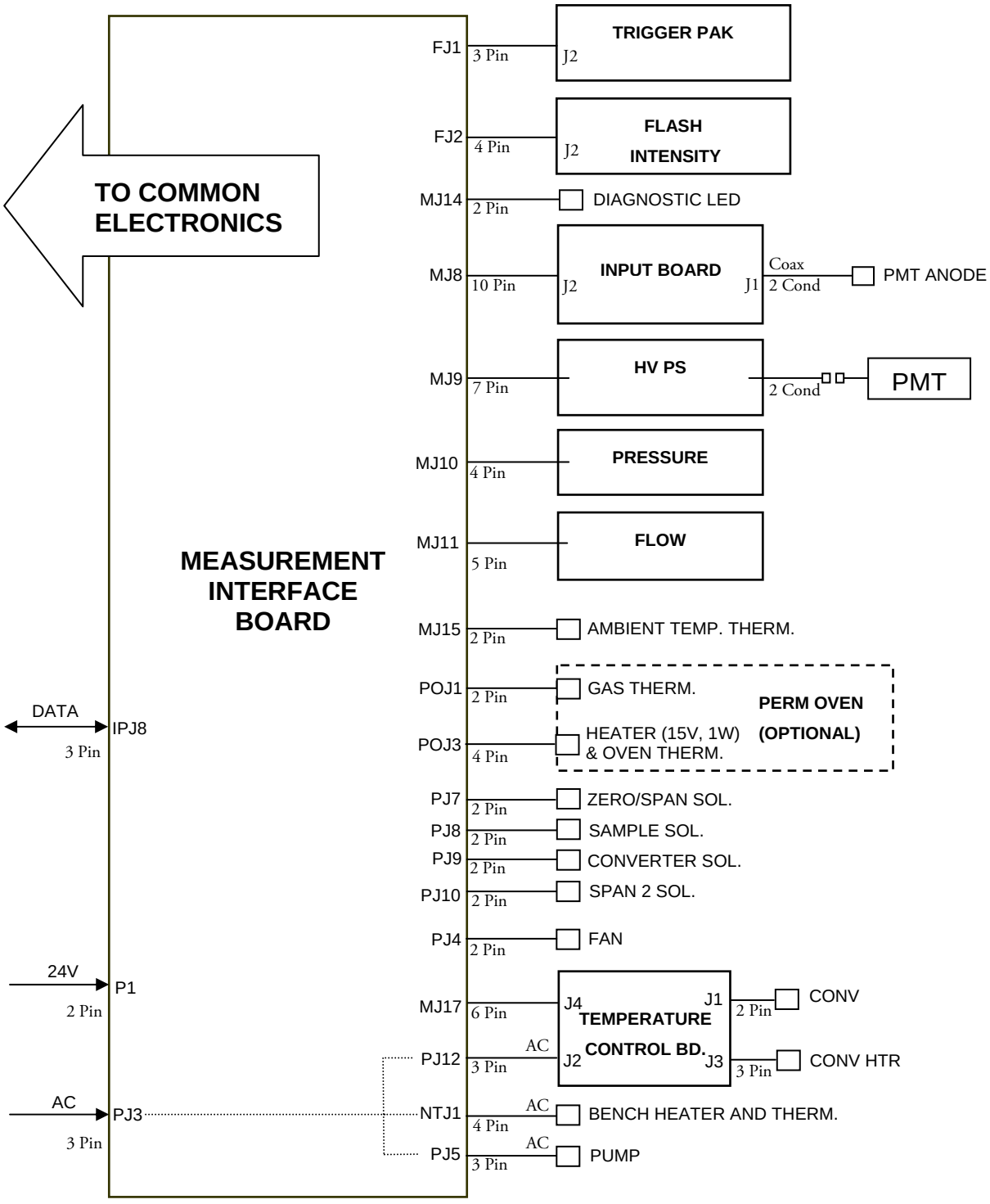

Figure 6–2. Board-Level Connection Diagram – Measurement System

Connector Pin Descriptions

The connector pin descriptions in **Table 6–5** through **Table 6–13** can be used along with the board-level connection diagrams to troubleshoot board-level faults.

- **Table 6–5.** Motherboard Connector Pin Descriptions on page 6-12
- **Table 6–6.** Measurement Interface Board Connector Pin Descriptions on page 6-17
- **Table 6–7.** Front Panel Board Connector Pin Descriptions on page 6-19
- **Table 6–8.** I/O Expansion Board (Optional) Connector Pin Descriptions on page 6-21
- **Table 6–9.** Digital Output Board Connector Pin Descriptions on page 6-22
- **Table 6–10.** Input Board Connector Pin Descriptions on page 6-24
- **Table 6–11.** Flash Trigger Pack Pin Descriptions on page 6-24
- **Table 6–12.** Flash Intensity Assembly Pin Descriptions on page 6-24
- **Table 6–13.** Converter Temperature Control Board Pin Descriptions on page 6-25

Table 6–5. Motherboard Connector Pin Descriptions

Connector Label	Reference Designator	Pin	Signal Description
INTF DATA	J1	1	Ground
		2	+RS485 to Interface Board
		3	-RS485 to Interface Board
10-BASE-T	J2	1	Ethernet Output (+)
		2	Ethernet Output (-)
		3	Ethernet Input (+)
		4	NC
		5	NC
		6	Ethernet Input (-)
		7	NC
		8	NC
EXPANSION BD	J3	1	+5V
		2	+24V

Connector Label	Reference Designator	Pin	Signal Description
		3	+24V
		4	Ground
		5	Ground
		6	Ground
		7	+RS485 to Expansion Board
		8	-RS485 to Expansion Board
SPARE DATA	J4	1	+5V
		2	+24V
		3	+24V
		4	Ground
		5	Ground
		6	Ground
		7	+RS485 to Spare Board
		8	-RS485 to Spare Board
I/O	J5	1	Power Fail Relay N.C. Contact
		2	Ground
		3	TTL Input 1
		4	TTL Input 2
		5	Ground
		6	TTL Input 5
		7	TTL Input 7
		8	TTL Input 8
		9	TTL Input 10
		10	Ground
		11	TTL Input 13
		12	TTL Input 15
		13	Ground
		14	Analog Voltage Output 1
		15	Analog Voltage Output 3
		16	Ground
		17	Analog Voltage Output 5
		18	Ground
		19	Ground
		20	Power Fail Relay COM

Connector Label	Reference Designator	Pin	Signal Description
		21	Power Fail Relay N.O. Contact
		22	Ground
		23	TTL Input 3
		24	TTL Input 4
		25	TTL Input 6
		26	Ground
		27	TTL Input 9
		28	TTL Input 11
		29	TTL Input 12
		30	TTL Input 14
		31	TTL Input 16
		32	Ground
		33	Analog Voltage Output 2
		34	Analog Voltage Output 4
		35	Ground
		36	Analog Voltage Output 6
		37	Ground
SER EN	J7	1	Serial Enable Jumper
		2	+3.3V
24V IN	J10	1	+24V
		2	Ground
DIGITAL OUTPUT	J14	1	+5V
		2	+24V
		3	+24V
		4	Ground
		5	Ground
		6	Ground
		7	SPI Reset
		8	SPI Input
		9	SPI Output
		10	SPI Board Select
		11	SPI Clock
EXT. RS485	J15	1	-RS485 to Rear Panel
		2	+RS485 to Rear Panel

Connector Label	Reference Designator	Pin	Signal Description
		3	+5V
		4	+5V
		5	+5V
		6	Ground
		7	Ground
		8	Ground
		9	NC
		10	NC
		11	+24V
		12	+24V
		13	+24V
		14	+24V
		15	+24V
24V MONITOR	J17	1	24V Power Monitor
		2	Ground
FRONT PANEL BD	J18	1	Ground
		2	Ground
		3	LCLK – LCD Signal
		4	Ground
		5	Ground
		6	LLP – LCD Signal
		7	LFLM – LCD Signal
		8	LD4 – LCD Signal
		9	LD0 – LCD Signal
		10	LD5 – LCD Signal
		11	LD1 – LCD Signal
		12	LD6 – LCD Signal
		13	LD2 – LCD Signal
		14	LD7 – LCD Signal
		15	LD3 – LCD Signal
		16	LCD Bias Voltage
		17	+5V
		18	Ground
		19	Ground

Connector Label	Reference Designator	Pin	Signal Description
		20	LCD_ONOFF – LCD Signal
		21	Keypad Row 2 Input
		22	Keypad Row 1 Input
		23	Keypad Row 4 Input
		24	Keypad Row 3 Input
		25	Keypad Col 2 Select
		26	Keypad Col 1 Select
		27	Keypad Col 4 Select
		28	Keypad Col 3 Select
		29	Ground
		30	Ground
		31	Ground
		32	Ground
		33	+24V
		34	+24V
RS232/RS485:A	P1:A	1	NC
		2	Serial Port 1 RX (-RS485 IN)
		3	Serial Port 1 TX (-RS485 OUT)
		4	NC
		5	Ground
		6	NC
		7	Serial Port 1 RTS (+RS485 OUT)
		8	Serial Port 1 CTS (+RS485 IN)
		9	NC
RS232/RS485:B	P1:B	1	NC
		2	Serial Port 2 RX (-RS485 IN)
		3	Serial Port 2 TX (-RS485 OUT)
		4	NC
		5	Ground
		6	NC
		7	Serial Port 2 RTS (+RS485 OUT)
		8	Serial Port 2 CTS (+RS485 IN)
		9	NC
AC IN	PJ1	1	AC-HOT

Connector Label	Reference Designator	Pin	Signal Description
		2	AC-NEUT
		3	AC-Ground
AC 24VPWR	PJ2	1	AC-HOT
		2	AC-NEUT
		3	AC-Ground
AC INTF BD	PJ3	1	AC-HOT
		2	AC-NEUT
		3	AC-Ground

Table 6–6. Measurement Interface Board Connector Pin Descriptions

Connector Label	Reference Designator	Pin	Signal Description
DATA	IPJ8	1	Ground
		2	+RS485 from Motherboard
		3	-RS485 from Motherboard
FLASH TRIG	FJ1	1	Flash Voltage
		2	Flash Trigger
		3	Ground
FLASH INT	FJ2	1	+15V
		2	-15V
		3	Ground
		4	Lamp Intensity
INPUT BD	MJ8	1	+15V
		2	Ground
		3	-15V
		4	+5V
		5	Ground
		6	Measurement Frequency Output
		7	Sample Hold
		8	NC
		9	GAIN A
		10	GAIN B
HVPS	MJ9	1	HV Power Supply Voltage Adjust
		2	Ground
		3	HV Power Supply On/Off

Connector Label	Reference Designator	Pin	Signal Description
		4	Ground
		5	HV Power Supply Voltage Monitor
		6	Ground
		7	Ground
PRES	MJ10	1	Pressure Sensor Input
		2	Ground
		3	+15V
		4	-15V
FLOW	MJ11	1	Flow Sensor Input
		2	Ground
		3	+15V
		4	-15V
		5	Ground
LED	MJ14	1	LED Drive
		2	LED Supply
AMB TEMP	MJ15	1	Ambient Temperature Thermistor
		2	Ground
BENCH HEATER	NTJ1	1	Bench Temperature Input
		2	Ground
		3	Bench Heater AC-HOT
		4	Bench Heater AC NEUT
CONVERTER	MJ17	1	Converter Temperature Input
		2	Ground
		3	Converter Heater On/Off
		4	Ground
		5	+15V
		6	-15V
24V IN	P1	1	+24V
		2	Ground
AC PUMP	PJ5	1	AC-HOT
		2	AC-NEUT
		3	AC-Ground
FAN	PJ4	1	+24V
		2	Ground

Connector Label	Reference Designator	Pin	Signal Description
AC IN	PJ3	1	AC-HOT
		2	AC-NEUT
		3	AC-Ground
AC CONVERTER	PJ12	1	AC-HOT
		2	AC-NEUT
		3	AC-Ground
Z/S SOL.	PJ7	1	+24V
		2	Zero/Span Solenoid Control
SAMPLE SOL.	PJ8	1	+24V
		2	Sample Solenoid Control
CONV SOL.	PJ9	1	+24V
		2	Spare 1 Solenoid Control
SPAN2 SOL.	PJ10	1	+24V
		2	Spare 2 Solenoid Control
PERM OVEN THERM	POJ1	1	Perm Oven Gas Thermistor
		2	Ground
PERM OVEN	POJ3	1	Perm Oven Heater On/Off
		2	+24V
		3	Perm Oven Heater Thermistor
		4	Ground

Table 6–7. Front Panel Board Connector Pin Descriptions

Connector Label	Reference Designator	Pin	Signal Description
MOTHER BOARD	J1	1	Ground
		2	Ground
		3	LCLK – LCD Signal
		4	Ground
		5	Ground
		6	LLP – LCD Signal
		7	LFLM – LCD Signal
		8	LD4 – LCD Signal
		9	LD0 – LCD Signal
		10	LD5 – LCD Signal
		11	LD1 – LCD Signal

Connector Label	Reference Designator	Pin	Signal Description
		12	LD6 – LCD Signal
		13	LD2 – LCD Signal
		14	LD7 – LCD Signal
		15	LD3 – LCD Signal
		16	LCD Bias Voltage
		17	+5V
		18	Ground
		19	Ground
		20	LCD_ONOFF – LCD Signal
		21	Keypad Row 2 Input
		22	Keypad Row 1 Input
		23	Keypad Row 4 Input
		24	Keypad Row 3 Input
		25	Keypad Col 2 Select
		26	Keypad Col 1 Select
		27	Keypad Col 4 Select
		28	Keypad Col 3 Select
		29	Ground
		30	Ground
		31	Ground
		32	Ground
		33	+24V
		34	+24V
LCD DATA	J2	1	LD0_5V – LCD Signal
		2	LD1_5V – LCD Signal
		3	LD2_5V – LCD Signal
		4	LD3_5V – LCD Signal
		5	LCD_ONOFF_5V – LCD Signal
		6	LFLM_5V – LCD Signal
		7	NC
		8	LLP_5V – LCD Signal
		9	LCLK_5V – LCD Signal
		10	+5V
		11	Ground

Connector Label	Reference Designator	Pin	Signal Description
		12	-25V
		13	LCD Bias Voltage
		14	Ground
KEYBOARD	J3	1	Keypad Row 1 Input
		2	Keypad Row 2 Input
		3	Keypad Row 3 Input
		4	Keypad Row 4 Input
		5	Keypad Col 1 Select
		6	Keypad Col 2 Select
		7	Keypad Col 3 Select
		8	Keypad Col 4 Select
LCD BACKLIGHT	J4	1	+5V Supply
		2	NC
		3	Ground

Table 6–8. I/O Expansion Board (Optional) Connector Pin Descriptions

Connector Label	Reference Designator	Pin	Signal Description
EXPANSION I/O	J1	1	Analog Voltage Input 1
		2	Analog Voltage Input 2
		3	Analog Voltage Input 3
		4	Ground
		5	Analog Voltage Input 4
		6	Analog Voltage Input 5
		7	Analog Voltage Input 6
		8	Ground
		9	Analog Voltage Input 7
		10	Analog Voltage Input 8
		11	Ground
		12	NC
		13	Current Output Return
		14	Ground
		15	Current Output 1
		16	Current Output Return
		17	Current Output 2

Connector Label	Reference Designator	Pin	Signal Description
		18	Current Output Return
		19	Current Output 3
		20	Current Output Return
		21	Current Output 4
		22	Current Output Return
		23	Current Output 5
		24	Current Output Return
		25	Current Output 6
MOTHER BD	J2	1	+5V
		2	+24V
		3	+24V
		4	Ground
		5	Ground
		6	Ground
		7	+RS485 to Motherboard
		8	-RS485 to Motherboard

Table 6–9. Digital Output Board Connector Pin Descriptions

Connector Label	Reference Designation	Pin	Signal Description
MOTHER BD	J1	1	+5V
		2	+24V
		3	+24V
		4	Ground
		5	Ground
		6	Ground
		7	SPI Reset
		8	SPI Input
		9	SPI Output
		10	SPI Board Select
		11	SPI Clock
DIGITAL OUTPUTS	J2	1	Relay 1 Contact a
		2	Relay 2 Contact a
		3	Relay 3 Contact a
		4	Relay 4 Contact a

Connector Label	Reference Designation	Pin	Signal Description
		5	Relay 5 Contact a
		6	Relay 6 Contact a
		7	Relay 7 Contact a
		8	Relay 8 Contact a
		9	Relay 9 Contact a
		10	Relay 10 Contact a
		11	NC
		12	Solenoid Drive Output 1
		13	Solenoid Drive Output 2
		14	Solenoid Drive Output 3
		15	Solenoid Drive Output 4
		16	Solenoid Drive Output 5
		17	Solenoid Drive Output 6
		18	Solenoid Drive Output 7
		19	Solenoid Drive Output 8
		20	Relay 1 Contact b
		21	Relay 2 Contact b
		22	Relay 3 Contact b
		23	Relay 4 Contact b
		24	Relay 5 Contact b
		25	Relay 6 Contact b
		26	Relay 7 Contact b
		27	Relay 8 Contact b
		28	Relay 9 Contact b
		29	Relay 10 Contact b
		30	+24V
		31	+24V
		32	+24V
		33	+24V
		34	+24V
		35	+24V
		36	+24V
		37	+24V

Table 6–10. Input Board Connector Pin Descriptions

Connector Label	Reference Designator	Pin	Signal Description
PMT IN	J1	1	PMT Input
		2	Ground
INTF BD	J2	1	+15V
		2	Ground
		3	-15V
		4	+5V
		5	Ground
		6	Measurement Frequency Output
		7	Sample Hold
		8	NC
		9	Gain A
		10	Gain B

Table 6–11. Flash Trigger Pack Pin Descriptions

Connector Label	Reference Designator	Pin	Signal Description
FLASH TRIG	TO JO1	1	Flash Voltage
		2	Flash Trigger
		3	Ground

Table 6–12. Flash Intensity Assembly Pin Descriptions

Connector Label	Reference Designator	Pin	Signal Description
FLASH INT		1	+15V
		2	-15V
		3	Ground
		4	Lamp Intensity

Table 6–13. Converter Temperature Control Board Pin Descriptions

Connector Label	Reference Designator	Pin	Signal Description
CONV TC	J1	1	Converter Thermocouple –Neg Input
		2	Converter Thermocouple –Pos Input
AC IN	J2	1	AC input - A
		2	AC input - B
CONV HTR	J3	1	Chassis Ground
		2	Converter Heater AC - Return
		3	Converter Heater AC - Output
INTF	J4	1	Converter Temperature Output
		2	Ground
		3	Converter Heater Control Input
		4	Ground
		5	+15V
		6	-15V

Service Locations

For additional assistance, service is available from exclusive distributors worldwide. Contact one of the phone numbers below for product support and technical information or visit us on the web at www.thermo.com/aqi.

1-866-282-0430 Toll Free

1-508-520-0430 International

Chapter 7
Servicing

This chapter explains how to replace the Model 450*i* subassemblies. It assumes that a subassembly has been identified as defective and needs to be replaced (or is an "expendable" item not covered under warranty). Expendable items are indicated by an asterisk (*) in the "Model 450*i* Replacement Parts" table.

For fault location information refer to the "Preventive Maintenance" chapter and the "Troubleshooting" chapter in this manual.

The service mode, described in the "Operation" chapter, includes parameters and functions that are useful when making adjustments or diagnosing problems.

For additional service assistance, see "Service Locations" at the end of this chapter.

This chapter includes the following parts information and component replacement procedures:

- "Safety Precautions" on page 7-3
- "Firmware Updates" on page 7-4
- "Accessing the Service Mode" on page 7-4
- "Replacement Parts List" on page 7-5
- "Cable List" on page 7-6
- "External Device Connection Components" on page 7-7
- "Removing the Measurement Bench and Lowering the Partition Panel" on page 7-8
- "Fuse Replacement" on page 7-10
- "Pump Replacement" on page 7-11
- "Fan/Filter Replacement" on page 7-12
- "Optical Bench Replacement" on page 7-13
- "Cleaning the Mirrors" on page 7-15
- "Flash Lamp Replacement" on page 7-16

- "Flash Lamp Voltage Adjustment" on page 7-18
- "Flash Trigger Assembly Replacement" on page 7-18
- "Flash Intensity Assembly Replacement" on page 7-19
- "Initial Flash Reference Adjustment" on page 7-20
- "Photomultiplier Tube Replacement" on page 7-21
- "PMT High Voltage Power Supply Replacement" on page 7-22
- "PMT Voltage Adjustment" on page 7-23
- "DC Power Supply Replacement" on page 7-24
- "Analog Output Testing" on page 7-25
- "Analog Output Calibration on" page 7-28
- "Pressure Transducer Assembly Replacement" on page 7-31
- "Pressure Transducer Calibration" on page 7-32
- "Flow Transducer Replacement" on page 7-34
- "Flow Transducer Calibration" on page 7-35
- "Heater Assembly Replacement" on page 7-37
- "Heated Kicker Replacement" on page 7-38
- "Converter Replacement" on page 7-39
- "Thermistor Replacement" on page 7-40
- "Ambient Temperature Calibration" on page 7-41
- "Input Board Replacement" on page 7-42
- "I/O Expansion Board (Optional) Replacement" on page 7-43
- "Digital Output Board Replacement" on page 7-45
- "Motherboard Replacement" on page 7-46
- "Measurement Interface Board Replacement" on page 7-47
- "Front Panel Board Replacement" on page 7-48
- "LCD Module Replacement" on page 7-49
- "Service Locations" on page 7-50

Safety Precautions

Read the safety precautions before beginning any procedures in this chapter.

WARNING The service procedures in this manual are restricted to qualified representatives. ▲

If the equipment is operated in a manner not specified by the manufacturer, the protection provided by the equipment may be impaired. ▲

CAUTION Carefully observe the instructions in each procedure. Avoid contact with converter heated components. ▲

Equipment Damage Some internal components can be damaged by small amounts of static electricity. A properly ground antistatic wrist strap must be worn while handling any internal component (**Figure 7–1**). If an antistatic wrist strap is not available, be sure to touch the instrument chassis before touching any internal components. When the instrument is unplugged, the chassis is not at earth ground. ▲

DO NOT point the photomultiplier tube at a light source. This can permanently damage the tube. ▲

DO NOT attempt to clean the mirrors in the optical bench. These mirrors do not come in contact with the sample gas and should not be cleaned. Cleaning the mirrors can damage the mirrors. ▲

Handle all printed circuit boards by the edges. ▲

Do not remove the LCD panel or frame from the LCD module. ▲

The LCD polarizing plate is very fragile, handle it carefully. ▲

Do not wipe the LCD polarizing plate with a dry cloth, it may easily scratch the plate. ▲

Do not use alcohol, acetone, MEK or other Ketone based or aromatic solvents to clean the LCD module, use a soft cloth moistened with a naphtha cleaning solvent. ▲

Do not place the LCD module near organic solvents or corrosive gases. ▲

Do not shake or jolt the LCD module. ▲

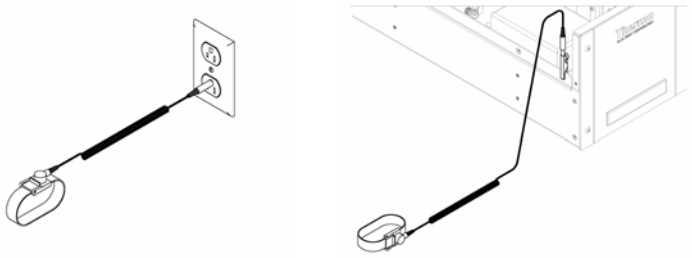

Figure 7–1. Properly Grounded Antistatic Wrist Strap

Firmware Updates

The firmware can be updated by the user in the field via the serial port or over the Ethernet. This includes both the main processor firmware and the firmware in all low-level processors. Refer to the *iPort* manual for the firmware update procedure.

Accessing the Service Mode

If the Service Menu is not displayed on the Main Menu, use the following procedure to display it.

1. At the Main Menu, press ↓ to scroll to Instrument Controls > press ↵ > ↓ to scroll to **Service Mode** > and press ↵.

   The Service Mode screen appears.

2. Press ↵ to toggle the Service Mode to ON. The service (wrench) icon on the status bar is shown when service mode is ON.

3. Press ▮ > ▮ to return to the Main Menu.

4. Return to the procedure.

Replacement Parts List

Table 7–1 lists the replacement parts for the Model 450*i* major subassemblies. Refer to **Figure 7–2** to identify the component location.

Table 7–1. Model 450*i* Replacement Parts

Part Number	Description
100480-00	Front Panel Pushbutton Board
101491-18	Processor Board
100533-00	Motherboard Assembly
100539-00	Digital Output Board
100542-00	I/O Expansion Board (Optional)
102340-00	Front Panel Connector Board
102496-00	Front Panel Display
101399-00	Transformer, Step-Down, 220-240V (Optional)
101863-00	Transformer, 100V, Step-up Transformer
100862-00	Measurement Interface Board Assembly
102273-00	Input Board Assembly
8774	Trigger Board Assembly
103103-00	Temperature Control Board Assembly
103168-01	Converter Assembly, 120V
101023-00	Pressure Transducer Assembly
102055-00	Flow Transducer, two groove
8666	Lamp, Flashtube (UV Source)
8884	Flash Intensity (PhotocelI) Assembly
8746	Kicker Assembly, Heated
8868	Photomultiplier Tube (PMT)
101024-00	PMT High Voltage Power Supply
100727-00	PMT Base Socket Assembly
101426-00	Pump 110VAC w/Plate and Fittings
8606	Pump Repair Kit (for 101426-00)*
101055-00	AC Receptacle Assembly
101905-00	Fuse, 250VAC, 4.0 Amp, SlowBlow (for 100VAC and 110VAC models)*
101904-00	Fuse, 250VAC, 2 Amp, SlowBlow (for 220-240VAC models)*
101681-00	Power Supply Assembly, 24VDC, w/Base Plate and Screws
101688-00	Ambient Temperature Thermistor with Connector
100907-00	Fan, 24VDC

Part Number	Description
8630	Filter Guard Assembly (w/foam)*
101390-00	Solenoid Assembly
6993	SO_2 Scrubber Assembly (option)
4158	Charcoal (pound)*
102701-00	Teflon particulate filter (option)
4126	Capillary, 0.020-inch ID
4800	Capillary O-ring
4119	Capillary, 0.008-inch ID (Perm Oven option)

*Expendable item not covered by warranty.

Cable List

Table 7–2 describes the Model 450*i* cables. See the "Troubleshooting" chapter for associated connection diagrams and board connector pin descriptions.

Table 7–2. Model 450*i* Cables

Part Number	Description
101036-00	DC Power Supply, 24V Output
101037-00	115VAC Supply to Measurement Interface Board
101048-00	RS-485/Data
101038-00	Power Switch to Motherboard
101364-00	DC Power Supply Status Monitor
101054-00	Motherboard to Front Panel Board
101035-00	DC Power Supply AC Input
101033-00	AC from Receptacle
101377-00	AC to Power Switch
103797-00	Converter Temperature Control
101050-00	Converter Heater AC Power
101355-01	Signal Output Ribbon
101695-00	Permeation Oven (option)
101055-00	Main AC Receptacle Assembly
101267-00	Fan Power Cable

External Device Connection Components

Table 7–3 lists the standard and optional cables and components used for connecting external devices such as PCs and data loggers to an *i*Series instrument.

Table 7–3. External Device Connection Components

Part Number	Description
102562-00	Terminal Block and Cable Kit (DB25) (optional)
102556-00	Terminal Block and Cable Kit (DB37) (optional)
102645-00	Cable, DB37M to Open End, Six Feet (optional)
102646-00	Cable, DB37F to Open End, Six Feet (optional)
102659-00	Cable, DB25M to Open End, Six Feet (optional)
6279	Cable, RS-232 (optional)
102888-00	Terminal Board PCB Assembly, DB37F (standard with all instruments)
102891-00	Terminal Board PCB Assembly, DB37M (standard with all instruments)
103084-00	Terminal Board PCB Assembly, DB25M (included with optional I/O Expansion Board in all instruments)

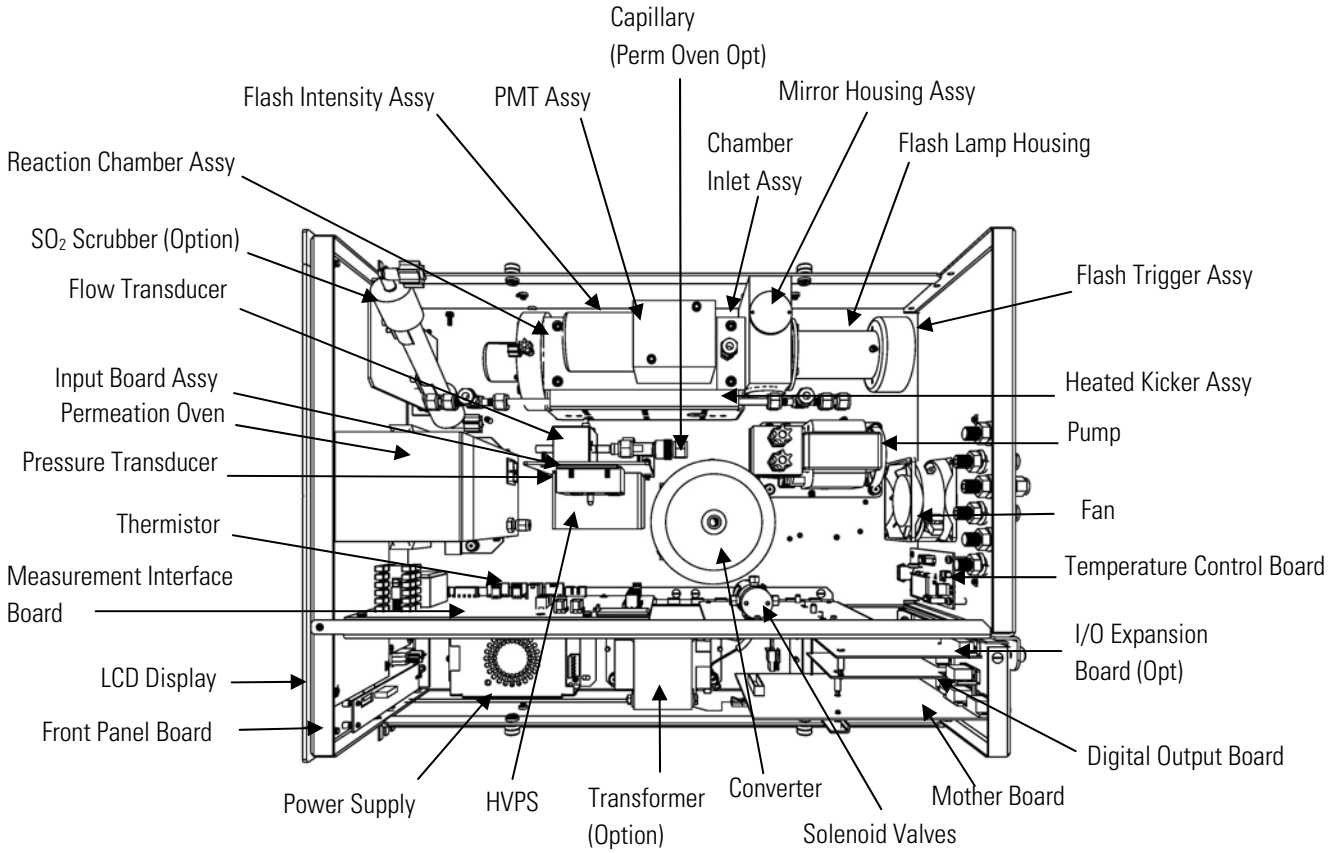

Figure 7–2. Model 450i Component Layout

Removing the Measurement Bench and Lowering the Partition Panel

The measurement bench can be removed and the partition panel can be lowered to improve access to connectors and components. Refer to the following steps when a procedure requires lowering the partition panel (**Figure 7–3**).

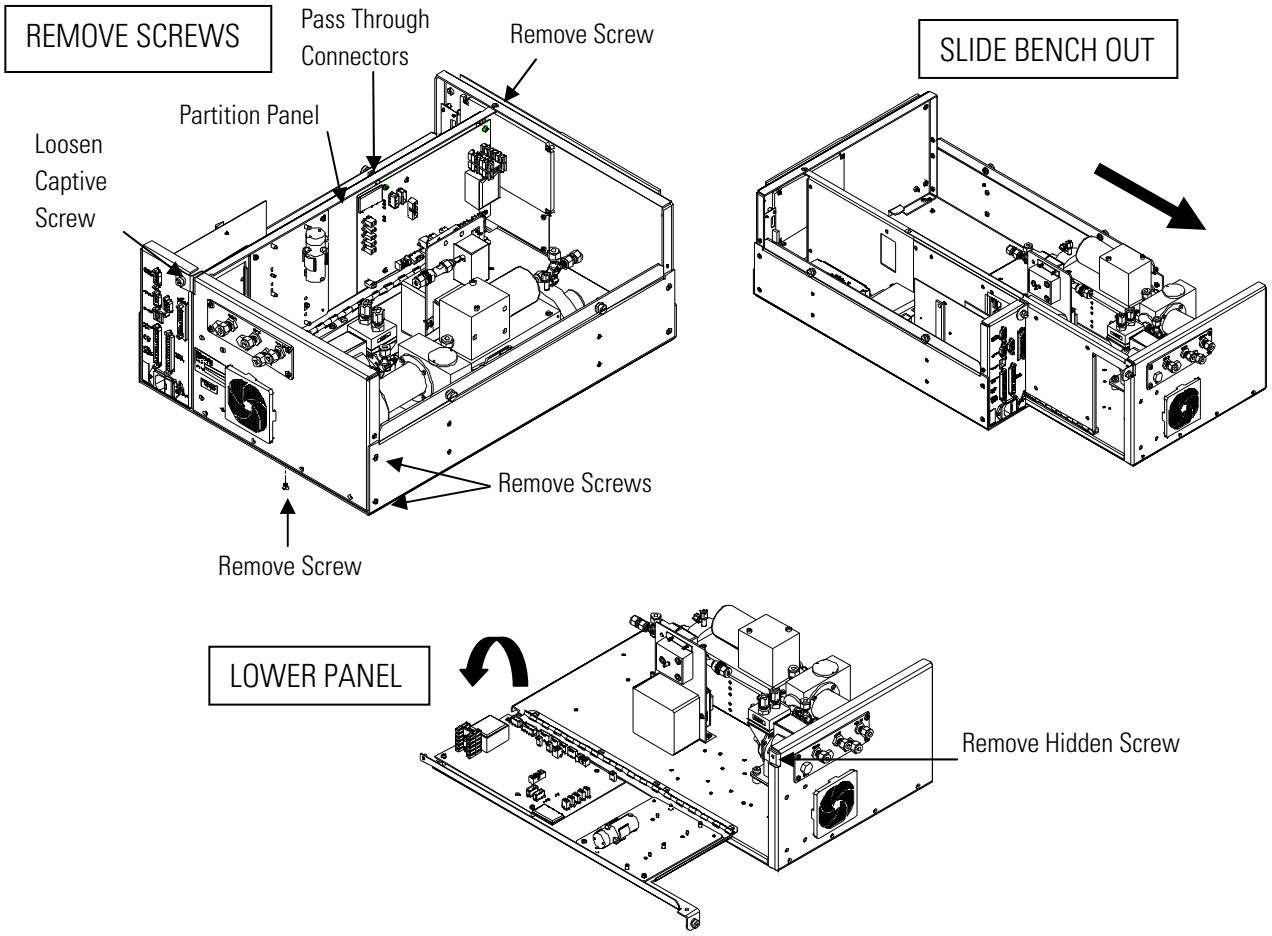

Figure 7–3. Removing the Measurement Bench and Lowering the Partition Panel

Equipment Required:

Philips screwdriver

Equipment Damage Some internal components can be damaged by small amounts of static electricity. A properly ground antistatic wrist strap must be worn while handling any internal component. If an antistatic wrist strap is not available, be sure to touch the instrument chassis before touching any internal components. When the instrument is unplugged, the chassis is not at earth ground. ▲

1. Turn instrument OFF and unplug the power cord.

2. If the instrument is mounted in a rack, remove it from the rack.

3. Remove the cover.

4. Disconnect the plumbing connections at the rear of the measurement bench.

5. Disconnect the three connectors that pass through the center of the partition panel and connect to the measurement interface board.

6. Remove two screws from the left side of the case (viewed from front).

7. Remove one screw from the bottom rear of the case.

8. Remove one screw from the top front of the partition panel.

9. While holding the case securely, loosen the captive screw at the rear of the measurement bench, and pull the measurement bench from the rear of the case.

10. Remove the screw at the top rear of the partition panel securing the top of partition panel to the measurement bench, and lower the panel being careful not to put excessive tension on the cables.

11. Replace the measurement bench by following previous steps in reverse.

Fuse Replacement

Use the following procedure to replace the fuse.

Equipment Required:

Replacement fuses (refer to the “Replacement Parts List” in this chapter).

1. Turn instrument OFF and unplug the power cord.

2. Remove fuse drawer, located on the AC power connector.

3. If either fuse is blown, replace both fuses.

4. Insert fuse drawer and reconnect power cord.

Pump Replacement

Use the following procedure to replace the pump (**Figure 7–4**). To rebuild the pump, see "Pump Rebuilding" on page 5-6.

Equipment Required:

Pump

Philips screwdriver

Equipment Damage Some internal components can be damaged by small amounts of static electricity. A properly ground antistatic wrist strap must be worn while handling any internal component. If an antistatic wrist strap is not available, be sure to touch the instrument chassis before touching any internal components. When the instrument is unplugged, the chassis is not at earth ground. ▲

1. Turn instrument OFF, unplug the power cord, and remove the cover.

2. Disconnect the pump power cable from the AC PUMP connector on the measurement interface board.

3. Remove both lines from the pump.

4. Loosen the four captive screws holding the pump bracket to the shock mounts and remove the pump assembly.

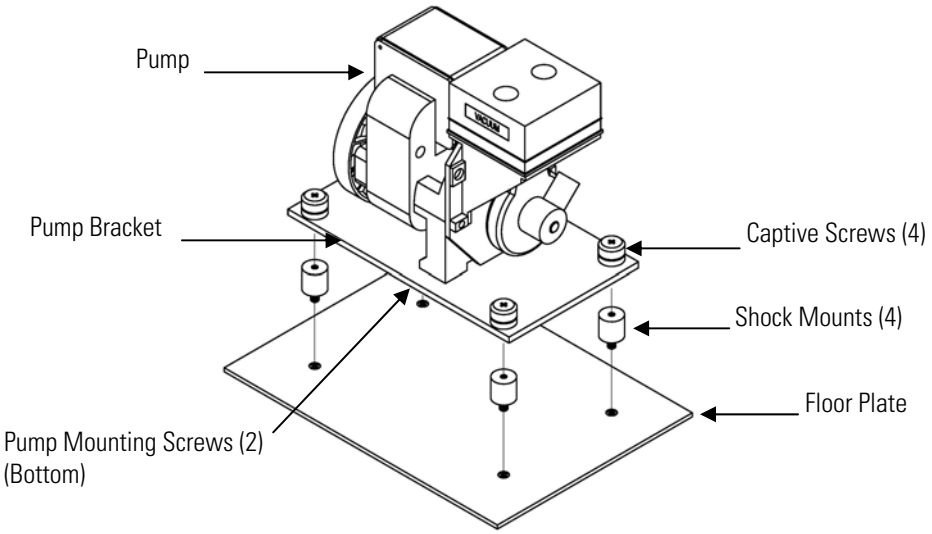

Figure 7–4. Replacing the Pump

5. Install the new pump by following the previous steps in reverse.

6. Perform a leak test as described in the "Preventive Maintenance" chapter.

Fan/Filter Replacement

Use the following procedure to replace the fan and or filter (**Figure 7–5**).

Equipment Required:

Fan

Fan filter

Philips screwdriver

Equipment Damage Some internal components can be damaged by small amounts of static electricity. A properly ground antistatic wrist strap must be worn while handling any internal component. If an antistatic wrist strap is not available, be sure to touch the instrument chassis before touching any internal components. When the instrument is unplugged, the chassis is not at earth ground. ▲

1. Turn instrument OFF, unplug the power cord, and remove the cover.

2. Remove the fan guard and filter from the rear of the instrument by unsnapping it.

3. If the fan is not being replaced, install the new filter, snap it into place, and skip the remaining steps.

4. Disconnect the fan power cable from the fan.

5. Remove the four fan mounting screws along with nuts and washers and remove the fan.

6. Install a new fan following the previous steps in reverse order.

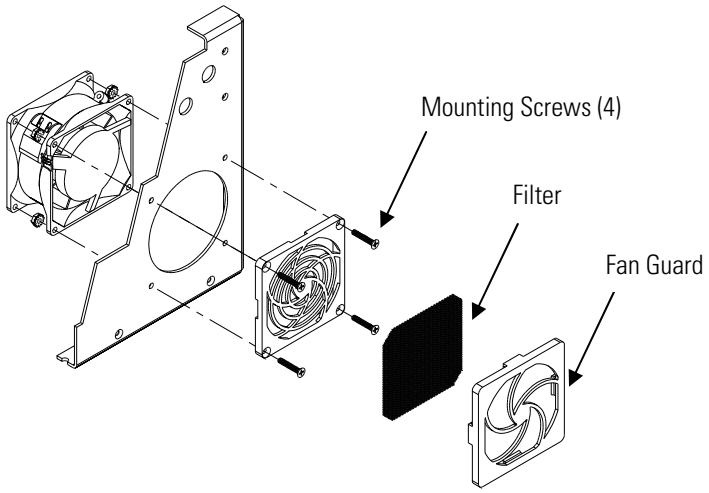

Figure 7–5. Replacing the Fan

Optical Bench Replacement

Use the following procedure to replace the optical bench (**Figure 7–6**).

Equipment Required:

Allen wrench, 5/32-inch

Philips screwdriver

Equipment Damage Some internal components can be damaged by small amounts of static electricity. A properly ground antistatic wrist strap must be worn while handling any internal component. If an antistatic wrist strap is not available, be sure to touch the instrument chassis before touching any internal components. When the instrument is unplugged, the chassis is not at earth ground. ▲

1. Turn instrument OFF, unplug the power cord, and remove the cover.

2. Disconnect the electrical cables from the optical bench:
   a. Flash intensity assembly cable from the FLASH INT connector on the measurement interface board
   b. Heater cable from AC BENCH connector on the measurement interface board
   c. PMT BNC cable from the input board connector

d. PMT power cable from the HVPS

e. LED cable from the LED connector on the measurement interface board

f. Flasher assembly from the FLASH TRIG connector on the measurement interface board

g. Green ground wire from the floor plate

3. Disconnect the optical bench plumbing.

4. Using a 5/32-inch Allen wrench, remove the four optical bench retaining screws. The heated kicker mounting bracket is held in place by the four optical bench retaining screws. When you remove these four screws, separate the heated kicker bracket from the optical bench and lift the optical bench off the floor plate.

5. Replace the optical bench by following the previous steps in reverse order.

6. Calibrate the instrument. Refer to the “Calibration” chapter in this manual.

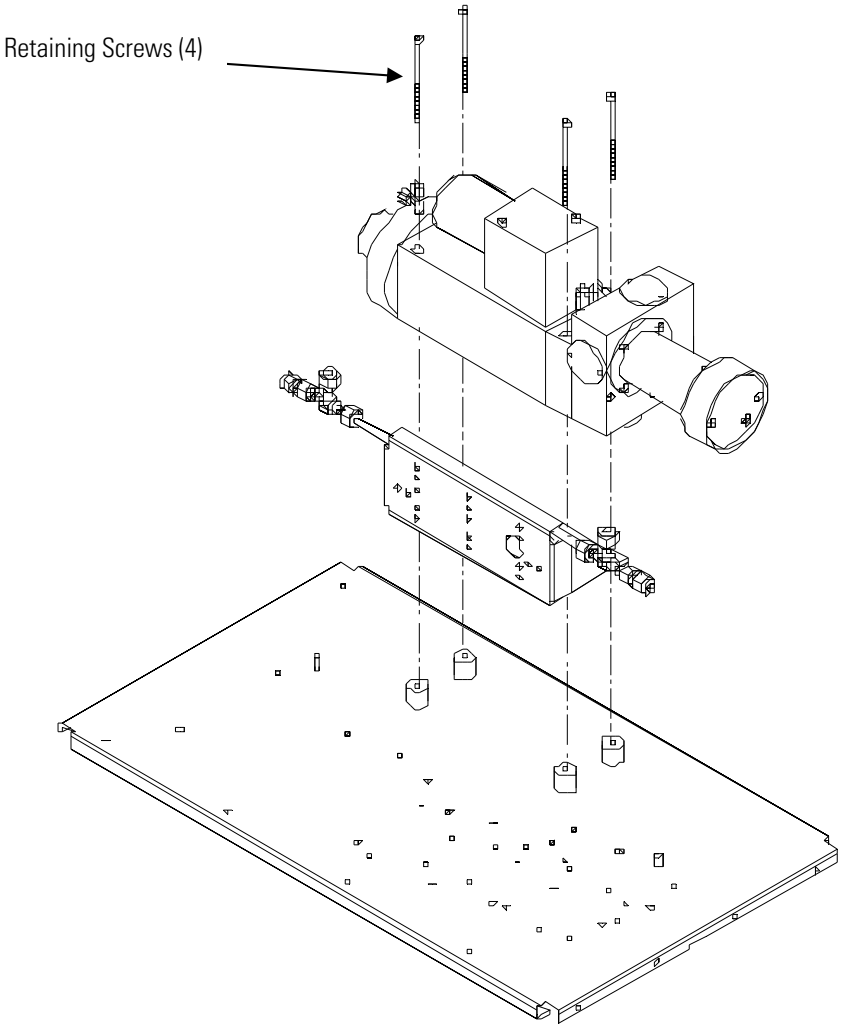

Figure 7–6. Replacing the Optical Bench

Cleaning the Mirrors

The mirrors located in the optical bench do not come in contact with the sample gas and DO NOT need cleaning. Read the Equipment Damage warning that follows.

Equipment Damage DO NOT attempt to clean the mirrors in the optical bench. These mirrors do not come in contact with the sample gas and should not be cleaned. Cleaning the mirrors can damage the mirrors. ▲

Flash Lamp Replacement

Use the following procedure to replace the flash lamp (**Figure 7–7**).

Equipment Required:

Flash lamp

Philips screwdriver

Equipment Damage Some internal components can be damaged by small amounts of static electricity. A properly ground antistatic wrist strap must be worn while handling any internal component. If an antistatic wrist strap is not available, be sure to touch the instrument chassis before touching any internal components. When the instrument is unplugged, the chassis is not at earth ground. ▲

1. Turn instrument OFF, unplug the power cord, and remove the cover.

2. Disconnect the flash trigger cable from the FLASH TRIG connector the measurement interface board.

3. Remove the bench (see “Optical Bench Replacement” on page 7-13.

4. Loosen the retaining screw on the top of the lamp housing and pull out the socket assembly and lamp.

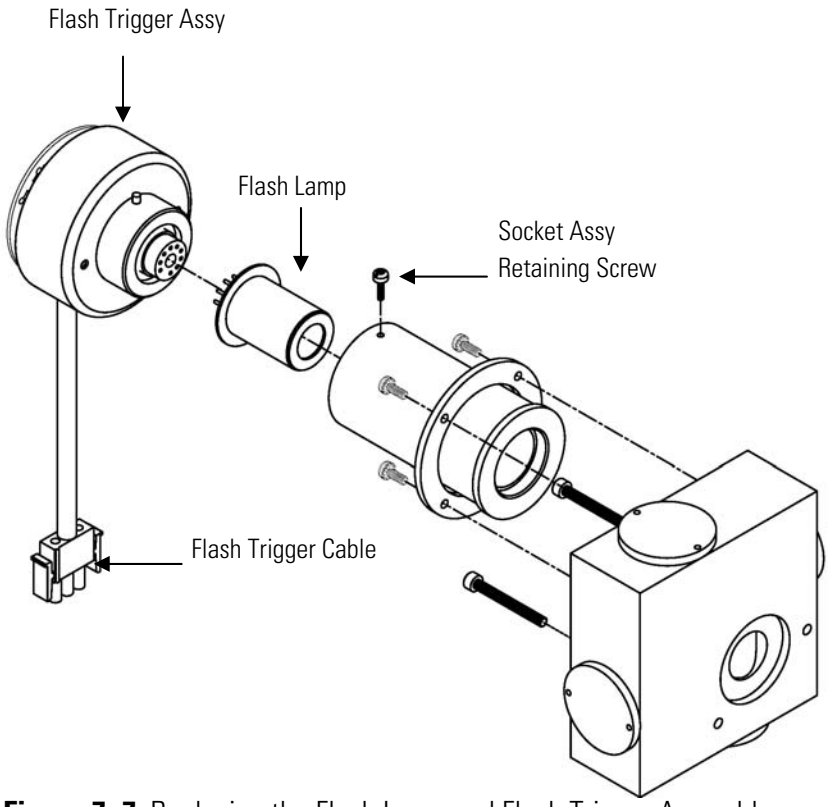

Figure 7–7. Replacing the Flash Lamp and Flash Trigger Assembly

5. Remove the old lamp from the socket assembly by pulling straight out and insert the new lamp.

6. Insert the socket assembly into the lamp housing, tighten the retaining screw, and reconnect the flash trigger cable.

7. Re-install the bench.

8. Adjust the lamp voltage. Refer to the “Flash Lamp Voltage Adjustment” procedure that follows.

Flash Lamp Voltage Adjustment

Use the following procedure to adjust the flash lamp voltage.

Note The service procedures in this manual are restricted to qualified service representatives. ▲

1. From the Main Menu, press ↓ to scroll to Service > press ↵ > ↓ to scroll to **Flash Voltage Adjustment** > and press ↵.

   The Set Flash Voltage - Man screen appears.

Note If the Service menu selection is not displayed, refer to "Accessing the Service Mode" in this chapter, then return to the beginning of this step. ▲

2. At the Set Flash Voltage - Man screen, use ↑ ↓ until the SUPPLY voltage is 800V.

3. Press ↵ to store the value.

4. Perform an initial flash reference adjustment. Refer to "Initial Flash Reference Adjustment" on page 7-20.

5. Perform a PMT voltage adjustment, and recalibrate the instrument. Refer to "PMT Voltage Adjustment" in this chapter and the calibration procedures in the "Calibration" chapter.

Flash Trigger Assembly Replacement

Use the following procedure to replace the flash trigger assembly (**Figure 7–7**).

Equipment Required:

Flash trigger assembly

Philips screwdriver

Equipment Damage Some internal components can be damaged by small amounts of static electricity. A properly ground antistatic wrist strap must be worn while handling any internal component. If an antistatic wrist strap is not available, be sure to touch the instrument chassis before touching any internal components. When the instrument is unplugged, the chassis is not at earth ground. ▲

1. Turn instrument OFF, unplug the power cord, and remove the cover.

2. Disconnect the flash trigger cable from the FLASH TRIG connector on the measurement interface board.

3. Remove the bench (see "Optical Bench Replacement" on page 7-13).

4. Loosen the retaining screw on the top of the lamp housing and pull out the trigger assembly and lamp.

5. Remove the lamp from the trigger assembly by pulling straight out and insert the lamp into the new trigger assembly.

6. Insert the new flash trigger assembly into the lamp housing, tighten the retaining screw, and reconnect the flash trigger cable.

7. Re-install the bench.

Flash Intensity Assembly Replacement

Use the following procedure to replace the flash intensity assembly.

Equipment Required:

Flash intensity assembly

Phillips screwdriver, small

Equipment Damage Some internal components can be damaged by small amounts of static electricity. A properly ground antistatic wrist strap must be worn while handling any internal component. If an antistatic wrist strap is not available, be sure to touch the instrument chassis before touching any internal components. When the instrument is unplugged, the chassis is not at earth ground. ▲

1. Turn instrument OFF, unplug the power cord, and remove the cover.

2. Disconnect the flash intensity cable from the FLASH INT connector on the measurement interface board.

3. Remove the three screws securing the flash intensity assembly to the reaction chamber (**Figure 7–8**).

4. Install the new flash intensity assembly by following this procedure in reverse.

5. Perform an initial flash reference adjustment. Refer to "Initial Flash Reference Adjustment" on page 7-20.

Note If the Service menu selection is not displayed, refer to "Accessing the Service Mode" in this chapter, then return to the beginning of this step. ▲

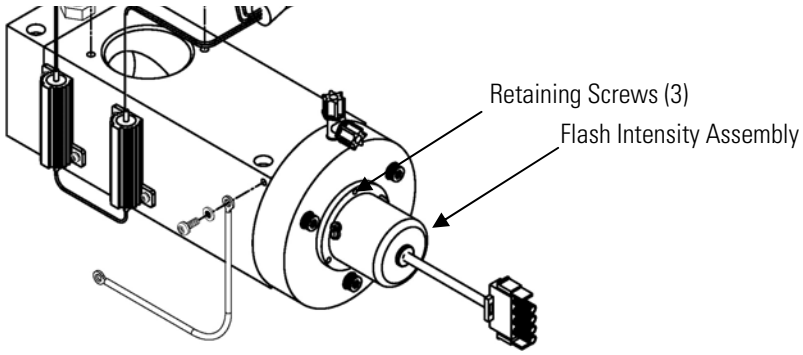

Figure 7–8. Replacing the Flash Intensity Assembly

Initial Flash Reference Adjustment

Use the following procedure to adjust the initial flash reference after adjusting the flash lamp voltage or replacing the flash intensity assembly. This procedure is used to set the current flash reference voltage the initial reference value.

1. From the Main Menu, press [↓] to scroll to Service, press [↵] > [↓] to scroll to **Initial Flash Reference**, and press [↵].

   The Set Initial Flash Reference screen displays.

Note If the Service menu selection is not displayed in the Main Menu, refer to "Accessing the Service Mode" in this chapter, then return to the beginning of this procedure. ▲

2. The Set Initial Flash Reference screen displays the current reference voltage. If the current reference voltage is between 2.8 and 5.0 volts, press [↵] to save this value as the initial flash reference voltage.

If the measured reference intensity is lower than 2.8V or higher than 5.0V, the value will not be saved. Use the following procedure to bring the value to within the correct range:

a. Remove the photocell assembly from the optical bench.

b. Change resistor R4 on the flash intensity board until the reading falls within the acceptable range. To increase the reading, increase the resistor value. The acceptable resistor values are between 3.5K and 15K Ohms.

c. After changing the resistor, record value and repeat the procedure from Step 1.

Photomultiplier Tube Replacement

Use the following procedure to replace the photomultiplier tube.

Equipment Required:

Photomultiplier tube

Philips screwdriver

Equipment Damage Some internal components can be damaged by small amounts of static electricity. A properly ground antistatic wrist strap must be worn while handling any internal component. If an antistatic wrist strap is not available, be sure to touch the instrument chassis before touching any internal components. When the instrument is unplugged, the chassis is not at earth ground. ▲

1. Turn analyzer OFF, unplug the power cord, and remove the cover.

2. Disconnect the high voltage cable from the PMT power supply cable connector and unplug the BNC cable from the input board connector.

3. Remove the three retaining screws holding the PMT cover to the PMT housing, and pull back the cover to access the two PMT base retaining screws.

4. Pull PMT and PMT base from the PMT housing by twisting it slightly back and forth.

5. To install a new PMT, follow previous steps in reverse.

6. Perform a photomultiplier tube calibration. See "PMT Voltage Adjustment" in this chapter.

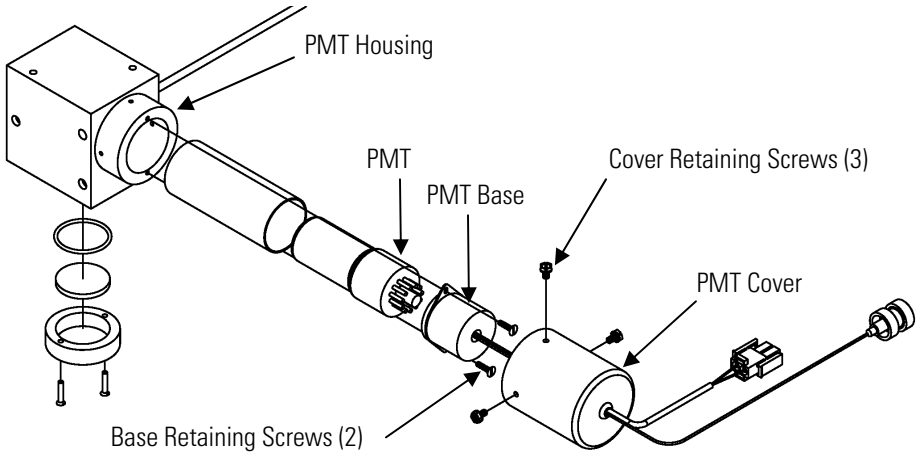

Figure 7–9. Replacing the PMT

PMT High Voltage Power Supply Replacement

Use the following procedure to replace the PMT high voltage power supply (**Figure 7–10**).

Equipment Required:

PMT high voltage power supply

Philips screwdriver

Equipment Damage Some internal components can be damaged by small amounts of static electricity. A properly ground antistatic wrist strap must be worn while handling any internal component. If an antistatic wrist strap is not available, be sure to touch the instrument chassis before touching any internal components. When the instrument is unplugged, the chassis is not at earth ground. ▲

1. Turn instrument OFF, unplug the power cord, and remove the cover.

2. Disconnect the two PMT high voltage supply cables.

3. Loosen the two retaining screws securing the power supply bracket to the floor plate and slide the power supply towards the rear slightly and lift it off the base screws.

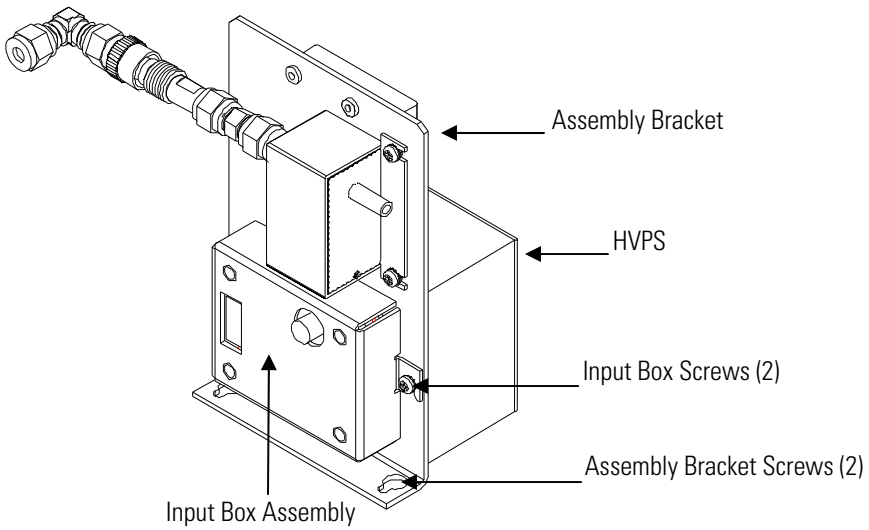

Figure 7–10. Replacing the PMT High Voltage Power Supply (HVPS)

4. Loosen two screws on the input box assembly and lift the input box assembly off the bracket.

5. Remove the four screws securing the power supply to the bracket and remove the power supply.

6. To install the power supply, follow the previous steps in reverse.

7. Set the PMT voltage and recalibrate the instrument. Refer to "PMT Voltage Adjustment" on page 7-23 and the calibration procedures in the "Calibration" chapter.

PMT Voltage Adjustment

Use the following procedure to adjust the PMT voltage after replacing the PMT, High Voltage Power Supply, or switching from standard to extended ranges or vice versa.

Note The service procedures in this manual are restricted to qualified service representatives. ▲

1. Select the SO_2, range. Refer to "Range Menu" on page 3-8.

2. Reset the SO_2 BKG calibration factors to 0.0. Refer to "Calibration Factors Menu" on page 3-16.

3. Reset the SO_2 COEF to 1.000.

4. Set the Averaging Time to 10 seconds. Refer to "Averaging Time" on page 3-15.

5. Connect the calibration gas and allow the instrument to sample calibration gas until the reading stabilizes.

6. From the Main Menu, press ↓ to scroll to Service > press ↵ > ↓ to scroll to **PMT Supply Settings** > and press ↵.

   The Set PMT Voltage screen appears.

Note If the Service menu selection is not displayed, refer to "Accessing the Service Mode" in this chapter, then return to the beginning of this step. ▲

7. At the Set PMT Voltage screen, use ↑ ↓ to increment/decrement the counts until the instrument displays the calibration gas concentration value.

DC Power Supply Replacement

Use the following procedure to replace the DC power supply (**Figure 7–11**).

Equipment Required:

DC power supply

Philips screwdriver

Equipment Damage Some internal components can be damaged by small amounts of static electricity. A properly ground antistatic wrist strap must be worn while handling any internal component. If an antistatic wrist strap is not available, be sure to touch the instrument chassis before touching any internal components. When the instrument is unplugged, the chassis is not at earth ground. ▲

1. Turn instrument OFF, unplug the power cord, and remove the cover.

2. Disconnect all the power supply electrical connections. Note connector locations to facilitate re-connection.

3. Loosen the captive screw securing the power supply to the chassis plate and lift out the power supply.

4. To install the DC power supply, follow the previous steps in reverse.

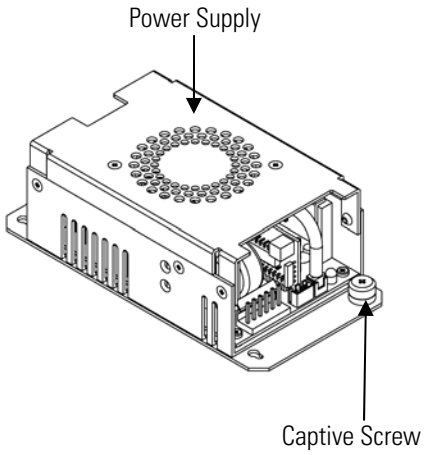

Figure 7–11. Replacing the DC Power Supply

Analog Output Testing

The analog outputs should be tested if the concentration value on the front panel display disagrees with the analog outputs. To check the analog outputs, you connect a meter to an analog output channel (voltage or current) and compare the meter reading with the output value displayed on the Test Analog Outputs screen.

Equipment Required:

Multimeter

Use the following procedure to test the analog outputs.

1. Connect a meter to the channel to be tested. **Figure 7–12** shows the analog output pins and **Table 7–4** identifies the associated channels.

2. From the Main Menu, press ↓ to scroll to Diagnostics, press ↵ > ↓ to scroll to **Test Analog Outputs**, and press ↵.

   The Test Analog Outputs screen displays.

3. Press ↓ to scroll to the desired channel corresponding to the rear panel terminal pins where the meter is connected, and press ↵.

   The Set Analog Outputs screen displays.

4. Press ↓ to set the output to zero.

   The Output Set To line displays Zero.

5. Check that the meter is displaying a zero value. If the meter reading differs by more than one percent, the analog outputs should be adjusted. Refer to “Analog Output Calibration” on page 7-28.

6. Press ↑ to set the output to full scale.

   The Output Set To line displays Full Scale.

7. Check that the meter is displaying the full scale value. If the meter reading differs by more than one percent, the analog outputs should be adjusted. Refer to “Analog Output Calibration” on page 7-28.

8. Press ← to reset the analog outputs to normal.

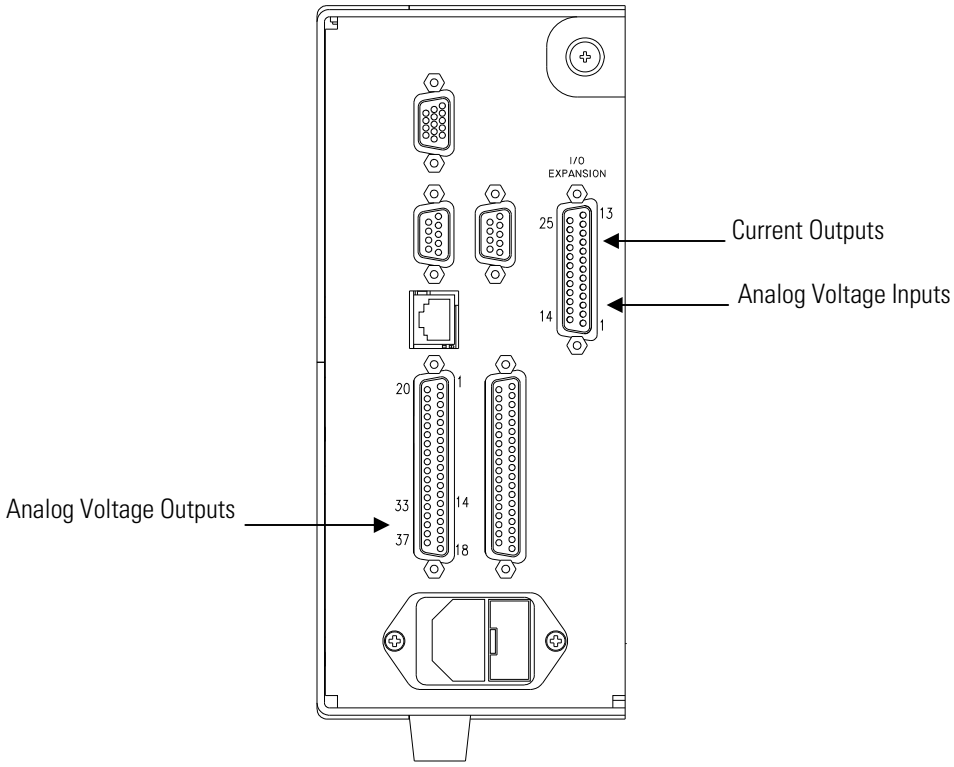

Figure 7–12. Rear Panel Analog Input and Output Pins

Table 7–4. Analog Output Channels and Rear Panel Pin Connections

Voltage Channel	Pin	Current Channel	Pin
1	14	1	15
2	33	2	17
3	15	3	19
4	34	4	21
5	17	5	23
6	36	6	25
Ground	16, 18, 19, 35, 37	Current Output Return	16, 18, 20, 22, 24

Table 7–5. Analog Input Channels and Rear Panel Pin Connections

Input Channel	Pin
1	1
2	2
3	3

Input Channel	Pin
4	5
5	6
6	7
7	9
8	10
Ground	4, 8, 11, 14

Analog Output Calibration

Use the following procedure to calibrate the analog outputs if a meter reading in the "Analog Output Testing" procedure differed by more than one percent or after replacing the motherboard or optional I/O expansion board.

Equipment Required:

Multimeter

1. Connect a meter to the channel to be adjusted and set to voltage or current as appropriate. **Figure 7–12** shows the analog output pins and **Table 7–4** identifies the associated channels.

2. From the Main Menu, press ↓ to scroll to Service, press ↵ > ↓ to scroll to Analog Out Calibration**,** and press ↵.

   The Analog Output Cal menu displays.

Note If the Service menu selection is not displayed, refer to "Accessing the Service Mode" in this chapter, then return to the beginning of this step. ▲

3. At the Analog Output Cal screen, press ↓ to scroll to the voltage channel or current channel corresponding to the rear panel terminal pins where the meter is connected, then press ↵.

4. With the cursor at Calibrate Zero, press ↵.

   The Analog Output Cal line displays Zero.

Note When calibrating the analog output, always calibrate zero first and then calibrate full scale. ▲

5. Use ↑ ↓ until the meter reads the value shown in the Set Output To line (0.0 V or 0.0 or 4.0 mA), then press ↵ to save the value.

6. Press ■ to return to the previous screen.

7. Press ↓ ↵ to select Calibrate Full Scale.

8. Use ↑ ↓ until the meter reads the value shown in the Set Output To line, then press ↵ to save the value.

Analog Input Calibration

Use the following procedures to calibrate the analog inputs after replacing the optional I/O expansion board. These procedures include selecting analog input channels, calibrating them to zero volts, and then calibrating them to full scale using a known voltage source.

Use the following procedure to calibrate the input channels to zero volts.

Calibrating the Input Channels to Zero Volts

1. From the Main Menu, press ↓ to scroll to Service, press ↵ > ↓ to scroll to Analog Input Calibration**,** and press ↵.

   The Analog Input Cal screen displays.

Note If the Service menu selection is not displayed, refer to "Accessing the Service Mode" in this chapter, then return to the beginning of this step. ▲

2. At the Analog Input Cal screen, press ↓ to scroll to a channel, and press ↵.

3. With the cursor at Calibrate Zero, press ↵.

   The screen displays the input voltage for the selected channel.

4. Make sure that nothing is connected to the channel input pins and press ↵ to calibrate the input voltage on the selected channel to zero volts.

   The screen displays 0.00 V as the voltage setting.

5. Press [ ] > [ ] to return to the Analog Input Cal screen and repeat Steps 2 through 4 to calibrate other input channels to zero as necessary.

6. Continue with the "Calibrating the Input Channels to Full Scale" procedure that follows.

Calibrating the Input Channels to Full Scale

Use the following procedure to calibrate the input channels to full scale by applying a known voltage to the channels.

Equipment Required:

DC voltage source (greater than 0 volts and less than 10 volts)

1. Connect the known DC voltage source to the input channel (1-8) to be calibrated. **Figure 7–12** shows the analog output pins and **Table 7–4** identifies the associated channels.

2. From the Main Menu, press [↓] to scroll to Service, press [↵] > [↓] to scroll to Analog Input Calibration**,** and press [↵].

   The Analog Input Cal screen displays input channels 1-8.

3. At the Analog Input Cal screen, press [↓] to scroll to the channel selected in Step 1, and press [↵].

4. Press [↓] to scroll to Calibrate Full Scale, and press [↵].

   The screen displays the current input voltage for the selected channel.

5. Use [←] [→] and [↑] [↓] to enter the source voltage, and press [↵] to calibrate the input voltage for the selected channel to the source voltage.

6. Press [ ] > [ ] to return to the input channels display and repeat Steps 3-5 to calibrate other input channels to the source voltage as necessary.

Pressure Transducer Assembly Replacement

Use the following procedure to replace the pressure transducer assembly (**Figure 7–13**).

Equipment Required:

Pressure transducer assembly

Philips screwdriver

Equipment Damage Some internal components can be damaged by small amounts of static electricity. A properly ground antistatic wrist strap must be worn while handling any internal component. If an antistatic wrist strap is not available, be sure to touch the instrument chassis before touching any internal components. When the instrument is unplugged, the chassis is not at earth ground. ▲

1. Turn instrument OFF, unplug the power cord, and remove the cover.

2. Disconnect plumbing from the pressure transducer assembly. Note the plumbing connections to facilitate reconnection.

3. Disconnect the pressure transducer cable from the measurement interface board.

4. Loosen the two pressure transducer assembly retaining screws and remove the pressure transducer assembly by sliding it down then taking it out.

5. To install the pressure transducer assembly, follow the previous steps in reverse.

6. Calibrate the pressure transducer. Refer to the “Pressure Transducer Calibration” procedure that follows.

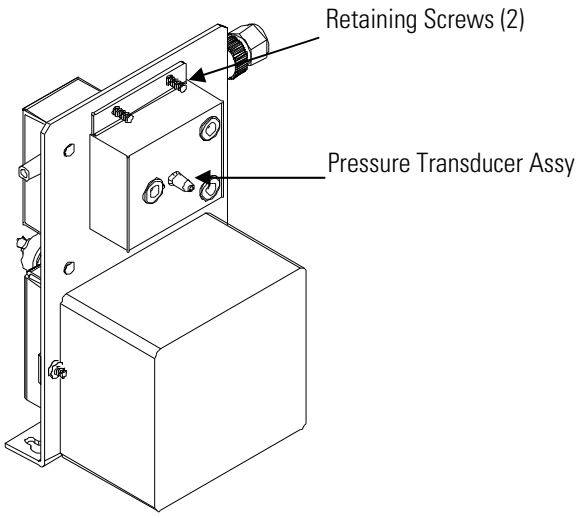

Figure 7–13. Replacing the Pressure Transducer Assembly

Pressure Transducer Calibration

Use the following procedure to calibrate the pressure transducer.

Notes An error in the zero setting of the pressure transducer does not introduce a measurable error in the output concentration reading. Therefore, if only a barometer is available and not a vacuum pump, adjust only the span setting. ▲

A rough check of the pressure accuracy can be made by obtaining the current barometric pressure from the local weather station or airport and comparing it to the pressure reading. However, since these pressures are usually corrected to sea level, it may be necessary to correct the reading to local pressure by subtracting 0.027 mmHg per foot of altitude. ▲

Do not try to calibrate the pressure transducer unless the pressure is known accurately. ▲

Equipment Required:

Vacuum pump

Equipment Damage Some internal components can be damaged by small amounts of static electricity. A properly ground antistatic wrist strap must be worn while handling any internal component. If an antistatic wrist strap is not available, be sure to touch the instrument chassis before touching any

internal components. When the instrument is unplugged, the chassis is not at earth ground. ▲

1. Remove the cover.

2. Disconnect the tubing from the pressure transducer and connect a vacuum pump known to produce a vacuum less than 1 mmHg.

3. From the Main Menu, press [↓] to scroll to **Service** > press [↵] > [↓] to scroll to **Pressure Calibration** > and press [↵].

   The Pressure Sensor Cal menu appears.

Note If the Service menu selection is not displayed, refer to "Accessing the Service Mode" in this chapter, then return to the beginning of this step. ▲

4. At the Pressure Sensor Cal screen, press [↵] to select **Zero**.

   The Calibrate Pressure Zero screen appears.

5. Wait at least 10 seconds for the zero reading to stabilize, then press [↵] to save the zero pressure value.

6. Disconnect the pump from the pressure transducer.

7. Press [ ] to return to the Pressure Sensor Cal screen.

8. At the Pressure Sensor Cal screen, press [↓] [↵] to select **Span**.

   The Calibrate Pressure Span screen appears.

9. Wait at least 10 seconds for the ambient reading to stabilize, use [←] [→] and [↑] [↓] to enter the known barometric pressure, and press [↵] to save the pressure value.

10. Reconnect the instrument tubing to the pressure transducer.

11. Install the cover.

Flow Transducer Replacement

Use the following procedure to replace the flow transducer (**Figure 7–14**).

Equipment Required:

Flow transducer

Philips screwdriver

Equipment Damage Some internal components can be damaged by small amounts of static electricity. A properly ground antistatic wrist strap must be worn while handling any internal component. If an antistatic wrist strap is not available, be sure to touch the instrument chassis before touching any internal components. When the instrument is unplugged, the chassis is not at earth ground. ▲

1. Turn instrument OFF, unplug the power cord, and remove the cover.

2. Disconnect the plumbing connections from the flow transducer. Note the plumbing connections to facilitate reconnection.

3. Disconnect the flow transducer cable from the FLOW connector on the measurement interface board.

4. Remove the two screws securing the flow transducer to the PMT supply/input board bracket and remove the flow transducer.

5. Install the new flow transducer following the previous steps in reverse.

6. Calibrate the flow transducer. Refer to the “Flow Transducer Calibration” procedure that follows.

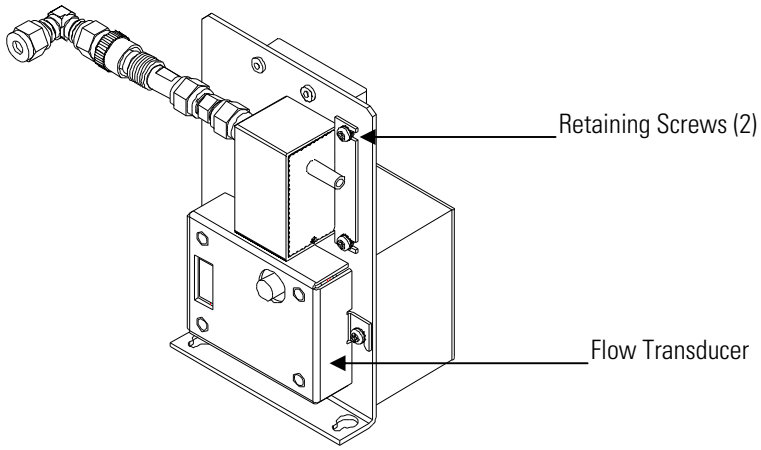

Figure 7–14. Replacing the Flow Transducer

Flow Transducer Calibration

Use the following procedure to calibrate the flow transducer.

Equipment Required:

Calibrated flow sensor

WARNING The service procedures in this manual are restricted to qualified representatives. ▲

If the equipment is operated in a manner not specified by the manufacturer, the protection provided by the equipment may be impaired. ▲

Equipment Damage Some internal components can be damaged by small amounts of static electricity. A properly ground antistatic wrist strap must be worn while handling any internal component. If an antistatic wrist strap is not available, be sure to touch the instrument chassis before touching any internal components. When the instrument is unplugged, the chassis is not at earth ground. ▲

1. Remove the cover.

2. Disconnect the pump cable from AC PUMP connector on the measurement interface board.

3. From the Main Menu, press ↓ to scroll to Service > press ↵ > ↓ to scroll to **Flow Calibration** > and press ↵.

   The Flow Sensor Cal menu appears.

Note If the Service menu selection is not displayed, refer to "Accessing the Service Mode" in this chapter, then return to the beginning of this step. ▲

4. At the Flow Sensor Cal menu, press ↵ to select **Zero**.

   The Calibrate Flow Zero screen appears.

5. Wait at least 10 seconds for the zero reading to stabilize, then press ↵ to save the zero flow value.

6. Reconnect the pump cable to the AC PUMP connector on the measurement interface board.

7. Connect a calibrated flow sensor at the SAMPLE bulkhead on the rear panel.

8. Press ▮ to return to the Flow Sensor Cal screen.

9. At the Flow Sensor Cal screen, press ↓ ↵ to select **Span**.

   The Calibrate Flow Span screen appears.

10. Wait at least 10 seconds for the reading to stabilize, use ← → and ↑ ↓ to enter the flow sensor reading, and press ↵ to save the value.

11. Install the cover.

Heater Assembly Replacement

Use the following procedure to replace the bench heater assembly (**Figure 7–15**).

Equipment Required:

Heater assembly

Heat sink grease

Philips screwdriver

Allen wrench, 5-32-inch

Equipment Damage Some internal components can be damaged by small amounts of static electricity. A properly ground antistatic wrist strap must be worn while handling any internal component. If an antistatic wrist strap is not available, be sure to touch the instrument chassis before touching any internal components. When the instrument is unplugged, the chassis is not at earth ground. ▲

1. Turn instrument OFF, unplug the power cord, and remove the cover.
2. Disconnect heaters from the AC BENCH cable.
3. Using the 5-32-inch wrench, remove the four screws securing the optical bench to the floor plate (**Figure 7–6**).
4. Lift the optical bench from the floor plate to gain access to the heater assembly.
5. Remove two retaining screws and washers from each heater and remove the heaters (**Figure 7–15**).
6. Apply heat sink grease to the new heaters as appropriate.
7. Fasten each heater with the two retaining screws and washers.
8. Secure the optical bench to the floor plate with the four screws.
9. Connect the heaters to the AC BENCH cable.
10. Replace the cover and plug in the power cord.

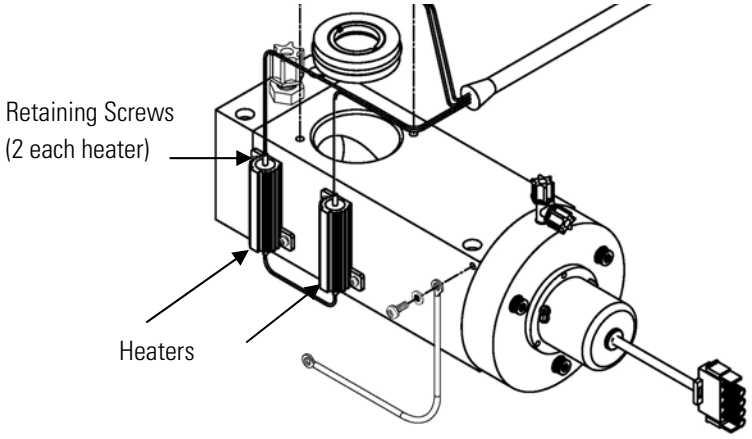

Figure 7–15. Replacing the Heater Assembly

Heated Kicker Replacement

Use the following procedure to replace the heated kicker assembly (**Figure 7–16**).

Equipment Required:

Heated kicker assembly

Allen wrench, 5/32-inch

Equipment Damage Some internal components can be damaged by small amounts of static electricity. A properly ground antistatic wrist strap must be worn while handling any internal component. If an antistatic wrist strap is not available, be sure to touch the instrument chassis before touching any internal components. When the instrument is unplugged, the chassis is not at earth ground. ▲

1. Turn instrument OFF, unplug the power cord, and remove the cover.

2. Using a 5/32-inch Allen wrench, remove the four optical bench retaining screws (**Figure 7–16**).

3. Disconnect the plumbing connections as appropriate to gain enough clearance to lift the optical bench off the heated kicker. Carefully note the plumbing connections to facilitate reconnection.

4. Lift the heated kicker off the rubber mounts.

5. Install the new heated kicker assembly.

6. Reposition the optical bench on top of the heated kicker, insert and tighten the four optical bench retaining screws, and reconnect any plumbing connections by following the previous steps in reverse order.

7. Calibrate the instrument. Refer to the "Calibration" chapter in this manual.

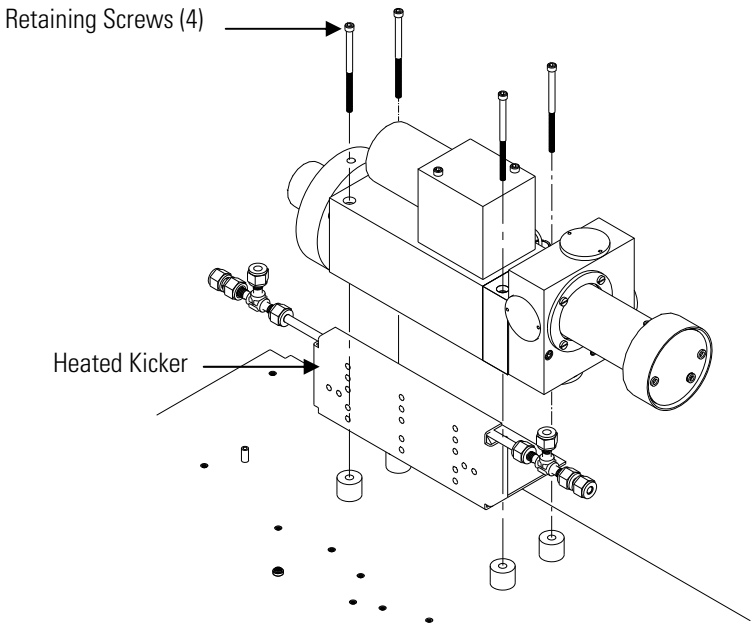

Figure 7–16. Replacing the Heated Kicker Assembly

Converter Replacement

Use the following procedure to replace the converter.

Equipment Required:

Converter

Philips screwdriver

Equipment Damage Some internal components can be damaged by small amounts of static electricity. A properly ground antistatic wrist strap must be worn while handling any internal component. If an antistatic wrist strap is not available, be sure to touch the instrument chassis before touching any

internal components. When the instrument is unplugged, the chassis is not at earth ground. ▲

1. Turn instrument OFF, unplug the power cord, and remove the cover.
2. Disconnect the plumbing and electrical connections from the converter.
3. Loosen the four retaining screws and remove the converter.
4. Install the converter by following the previous steps in reverse.

Thermistor Replacement

Use the following procedure to replace the ambient temperature thermistor (**Figure 7–17**).

Equipment Required:

Thermistor

Equipment Damage Some internal components can be damaged by small amounts of static electricity. A properly ground antistatic wrist strap must be worn while handling any internal component. If an antistatic wrist strap is not available, be sure to touch the instrument chassis before touching any internal components. When the instrument is unplugged, the chassis is not at earth ground. ▲

1. Turn instrument OFF, unplug the power cord, and remove the cover.
2. Squeeze the thermistor latch and pull the thermistor from the AMB TEMP connector on the measurement interface board.
3. Snap the new thermistor into the AMB TEMP connector.

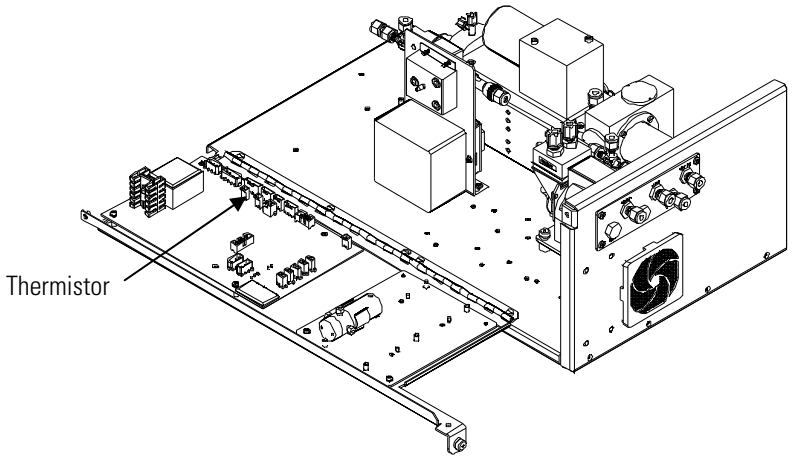

Figure 7–17. Replacing the Thermistor

Ambient Temperature Calibration

Use the following procedure to calibrate the ambient internal temperature for the instrument.

Equipment Required:

Calibrated thermometer or 10K ±1% resistor

WARNING The service procedures in this manual are restricted to qualified representatives. ▲

If the equipment is operated in a manner not specified by the manufacturer, the protection provided by the equipment may be impaired. ▲

Equipment Damage Some internal components can be damaged by small amounts of static electricity. A properly ground antistatic wrist strap must be worn while handling any internal component. If an antistatic wrist strap is not available, be sure to touch the instrument chassis before touching any internal components. When the instrument is unplugged, the chassis is not at earth ground. ▲

1. Remove the instrument cover.

2. Tape the thermistor (plugged into the measurement interface board) to a calibrated thermometer.

Note Since the thermistors are interchangeable to an accuracy of ±0.2 °C, and have a value of 10K ohms at 25 °C, an alternate procedure is to connect an accurately known 10K resistor to the thermistor input (AMB TEMP) on the measurement interface board, and enter the temperature reading. ▲

A 1 °C change corresponds to a ±5% change in resistance, thus this alternative procedure can be quite accurate as a check; however, it clearly is not NIST traceable. ▲

3. From the Main Menu, press [↓] to scroll to Service > press [↵] > [↓] to scroll to **Temperature Calibration** > and press [↵].

   The Calibrate Ambient Temperature screen appears.

Note If the Service menu selection is not displayed, refer to "Accessing the Service Mode" in this chapter, then return to the beginning of this step. ▲

4. Wait at least 10 seconds for the ambient reading to stabilize, use [←] [→] and [↑] [↓] to enter the known temperature, and press [↵] to save the temperature value.

5. Install the cover.

Input Board Replacement

Use the following procedure to replace the input board (**Figure 7–18**).

Equipment Required:

Input board

Philips screwdriver

Equipment Damage Some internal components can be damaged by small amounts of static electricity. A properly ground antistatic wrist strap must be worn while handling any internal component. If an antistatic wrist strap is not available, be sure to touch the instrument chassis before touching any internal components. When the instrument is unplugged, the chassis is not at earth ground. ▲

1. Disconnect the BNC signal cable and the ribbon cable.

2. Loosen the two screws securing the bracket holding the input board to the floor plate, slide the bracket towards the optical bench slightly, and lift it off the base screws.

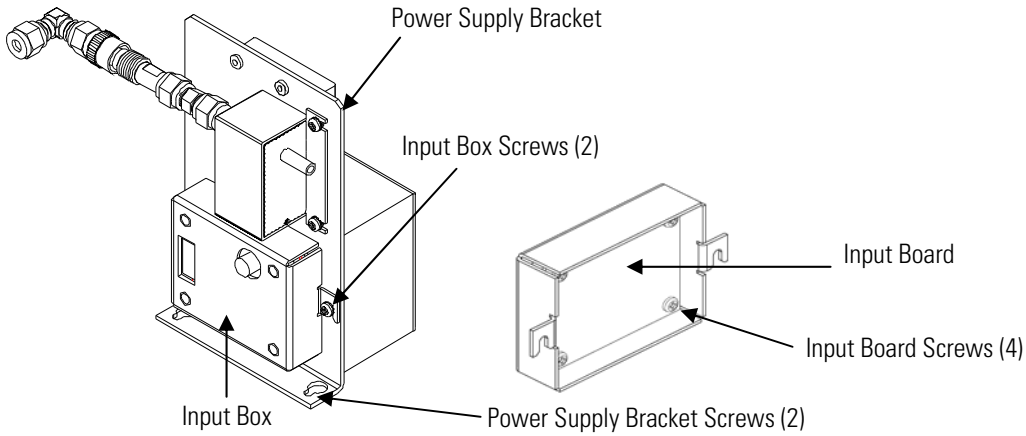

Figure 7–18. Replacing the Input Board

3. Loosen the two screws securing the input board assembly to the bracket, slide the assembly up, and remove from bracket.

4. Install the input board assembly by following the previous steps in reverse.

I/O Expansion Board (Optional) Replacement

Use the following procedure to replace the optional I/O expansion board (**Figure 7–19**).

Note After replacing the optional I/O expansion board, calibrate the current outputs and the analog voltage inputs. See the "Analog Output Calibration" procedure and the "Analog Input Calibration" procedure in this chapter. ▲

Equipment Required:

I/O expansion board

Nut driver, 3/16-inch

Equipment Damage Some internal components can be damaged by small amounts of static electricity. A properly ground antistatic wrist strap must be worn while handling any internal component. If an antistatic wrist strap

is not available, be sure to touch the instrument chassis before touching any internal components. When the instrument is unplugged, the chassis is not at earth ground. ▲

1. Turn instrument OFF, unplug the power cord, and remove the cover.

2. Unplug the I/O expansion board cable from the EXPANSION BD connector on the motherboard.

3. Remove the two standoffs holding the I/O expansion board connector to the rear panel (**Figure 7–20**).

4. Pop off the board from the mounting studs and remove the board.

5. To install the I/O expansion board, follow previous steps in reverse.

6. Calibrate the analog current outputs and analog voltage inputs per the procedure earlier in this chapter.

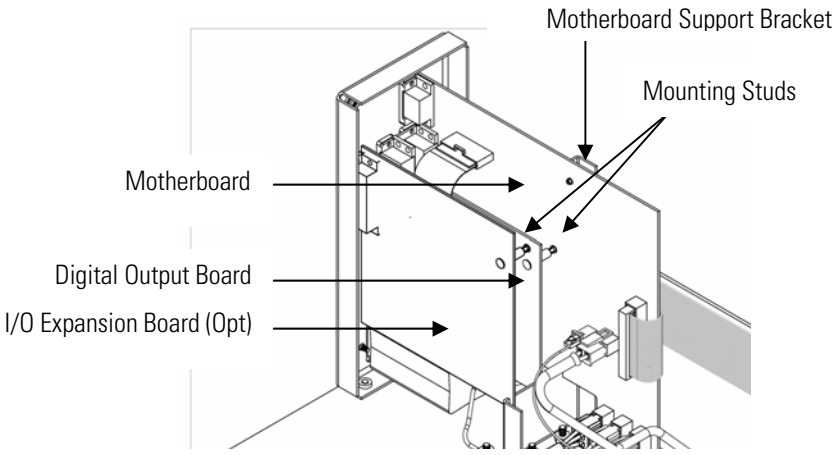

Figure 7–19. Replacing the I/O Expansion Board (Optional)

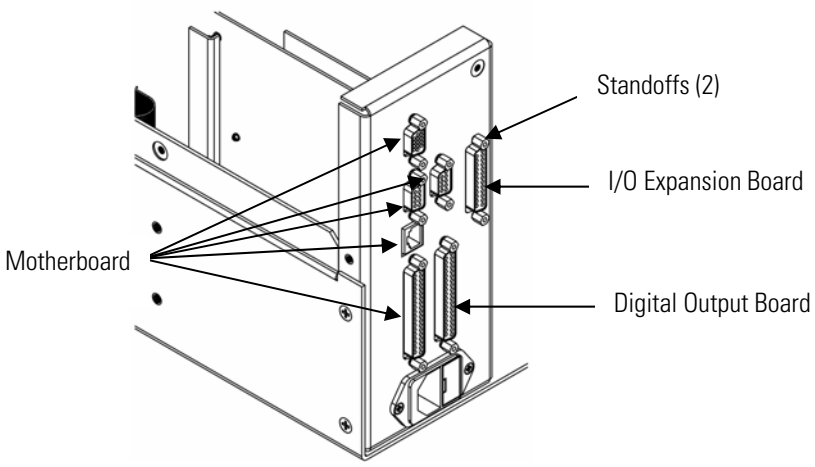

Figure 7–20. Rear Panel Board Connectors

Digital Output Board Replacement

Use the following procedure to replace the digital output board (**Figure 7–19**).

Equipment Required:

Digital output board

Nut driver, 3/16-inch

Equipment Damage Some internal components can be damaged by small amounts of static electricity. A properly ground antistatic wrist strap must be worn while handling any internal component. If an antistatic wrist strap is not available, be sure to touch the instrument chassis before touching any internal components. When the instrument is unplugged, the chassis is not at earth ground. ▲

1. Turn instrument OFF, unplug the power cord, and remove the cover.

2. Remove the I/O expansion board (optional), if used. See "I/O Expansion Board (Optional) Replacement" on page 7-43 in this chapter.

3. Disconnect the digital output board ribbon cable from the motherboard.

4. Using the nut driver, remove the two standoffs securing the board to the rear panel (**Figure 7–20**).

5. Pop off the digital output board from the mounting studs and remove the board.

6. To install the digital output board, follow previous steps in reverse.

Motherboard Replacement

Use the following procedure to replace the motherboard (**Figure 7–19**).

Equipment Required:

Motherboard

Philips screwdriver

Nut driver, 3/16-inch

Equipment Damage Some internal components can be damaged by small amounts of static electricity. A properly ground antistatic wrist strap must be worn while handling any internal component. If an antistatic wrist strap is not available, be sure to touch the instrument chassis before touching any internal components. When the instrument is unplugged, the chassis is not at earth ground. ▲

1. Turn instrument OFF, unplug the power cord, and remove the cover.

2. Remove the I/O expansion board (optional), if used. See the "I/O Expansion Board Replacement" procedure in this chapter.

3. Remove the digital output board. See the "Digital Output Board Replacement" procedure in this chapter.

4. Unplug all connectors from the motherboard. Note connector locations to facilitate reconnection.

5. Using the nut driver, remove the standoffs securing the board to the rear panel (**Figure 7–20**).

6. Pop off the motherboard from motherboard support bracket, and remove the motherboard.

7. To install the motherboard, follow previous steps in reverse.

8. Calibrate the analog voltage outputs. Refer to the "Analog Output Calibration" procedure on page 7-28.

Measurement Interface Board Replacement

Use the following procedure to replace the measurement interface board (**Figure 7–21**).

Equipment Required:

Measurement interface board

Philips screwdriver

Equipment Damage Some internal components can be damaged by small amounts of static electricity. A properly ground antistatic wrist strap must be worn while handling any internal component. If an antistatic wrist strap is not available, be sure to touch the instrument chassis before touching any internal components. When the instrument is unplugged, the chassis is not at earth ground. ▲

1. Refer to "Removing the Measurement Bench and Lowering the Partition Panel" in this chapter to lower the partition panel, then proceed to the next step below.

2. Unplug all connectors. Note the locations of the connectors to facilitate reconnection.

3. Unscrew the two screws at the top of the measurement interface board. Pop off the measurement interface board from the two bottom mounting studs and remove the board.

4. To install the measurement interface board, follow previous steps in reverse.

5. Re-install the measurement bench. Refer to "Removing the Measurement Bench and Lowering the Partition Panel" in this chapter.

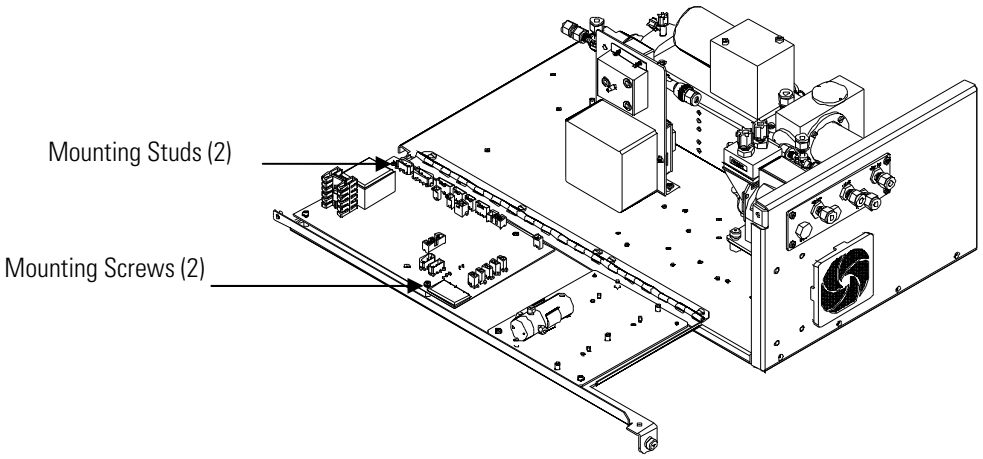

Figure 7–21. Replacing the Measurement Interface Board

Front Panel Board Replacement

Use the following procedure to replace the front panel board (**Figure 7–22**).

Equipment Required:

Front panel board

Equipment Damage Some internal components can be damaged by small amounts of static electricity. A properly ground antistatic wrist strap must be worn while handling any internal component. If an antistatic wrist strap is not available, be sure to touch the instrument chassis before touching any internal components. When the instrument is unplugged, the chassis is not at earth ground. ▲

1. Turn instrument OFF, unplug the power cord, and remove the cover.

2. Remove the three ribbon cables and the two-wire connector from the front panel board.

3. Pop off the board from the two top mounting studs and remove the board by lifting it up and off the slotted bottom support.

4. Replace the front panel board by following previous steps in reverse.

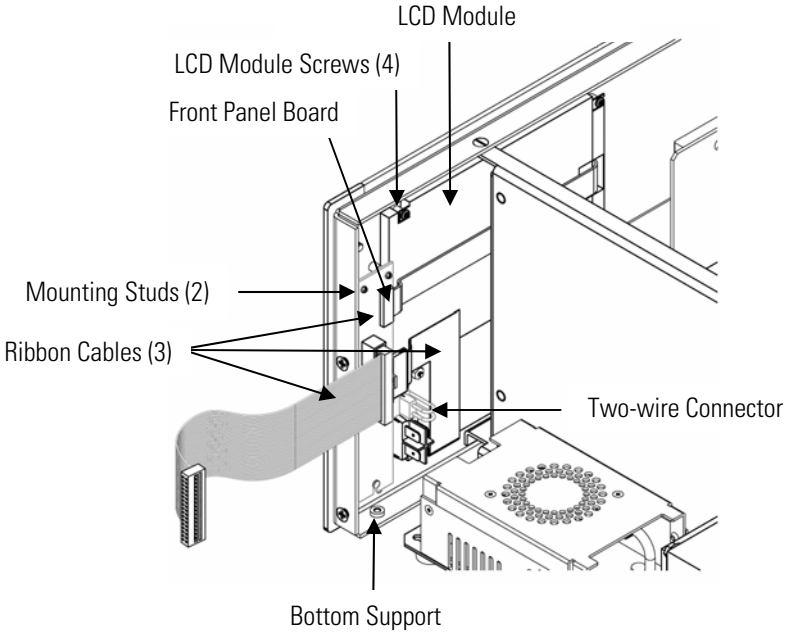

Figure 7–22. Replacing the Front Panel Board and the LCD Module

LCD Module Replacement

Use the following procedure to replace the LCD module (**Figure 7–22**).

Equipment Required:

LCD module

Philips screwdriver

CAUTION If the LCD panel breaks, do not to let the liquid crystal contact your skin or clothes. If the liquid crystal contacts your skin or clothes, wash it off immediately using soap and water. ▲

Equipment Damage Some internal components can be damaged by small amounts of static electricity. A properly ground antistatic wrist strap must be worn while handling any internal component. If an antistatic wrist strap is not available, be sure to touch the instrument chassis before touching any internal components. When the instrument is unplugged, the chassis is not at earth ground. ▲

Do not remove the LCD panel or frame from the LCD module. ▲

The LCD polarizing plate is very fragile, handle it carefully. ▲

Do not wipe the LCD polarizing plate with a dry cloth, it may easily scratch the plate. ▲

Do not use alcohol, acetone, MEK or other Ketone based or aromatic solvents to clean the module, use a soft cloth moistened with a naphtha cleaning solvent. ▲

Do not place the LCD module near organic solvents or corrosive gases. ▲

Do not shake or jolt the LCD module. ▲

1. Turn instrument OFF, unplug the power cord, and remove the cover.

2. Disconnect the ribbon cable and the two-wire connector from the front panel board.

3. Remove the four screws at the corners of the LCD module.

4. Slide the LCD module out towards the center of the instrument.

5. Replace the LCD module by following previous steps in reverse.

Note The optimal contrast will change from one LCD screen to another. After replacing the LCD screen, the contrast may need to be reset. If the content on the screen is visible, select Instrument Controls > **Screen Contrast** and adjust the screen contrast. If the content on the screen is not visible, use the "set contrast" C-Link command to set screen contrast to mid range, then optimize the contrast. See the "C-Link Protocol Commands" appendix for more information on this command. ▲

Service Locations

For additional assistance, service is available from exclusive distributors worldwide. Contact one of the phone numbers below for product support and technical information or visit us on the web at www.thermo.com/aqi.

1-866-282-0430 Toll Free

1-508-520-0430 International

Chapter 8
System Description

This chapter describes the function and location of the system components, provides an overview of the software structure, and includes a description of the system electronics and input/output connections and functions as follows.

- "Hardware" on page 8-1
- "Software" on page 8-5
- "Electronics" on page 8-6
- "I/O Components" on page 8-10

Hardware

Model 450*i* hardware components (**Figure 8–1**) include:

- Converter
- Temperature control board
- Selective SO_2 scrubber (option)
- Heated hydrocarbon kicker
- Optics
  - Flash lamp
  - Condensing lens
  - Mirror assembly
  - Light baffle
- Trigger pack
- Reaction chamber
  - Bandpass filter
- Photomultiplier tube
- Photodetector
- Flow sensor
- Pressure transducer

- Capillary
- Vacuum Pump
- Permeation oven (option)

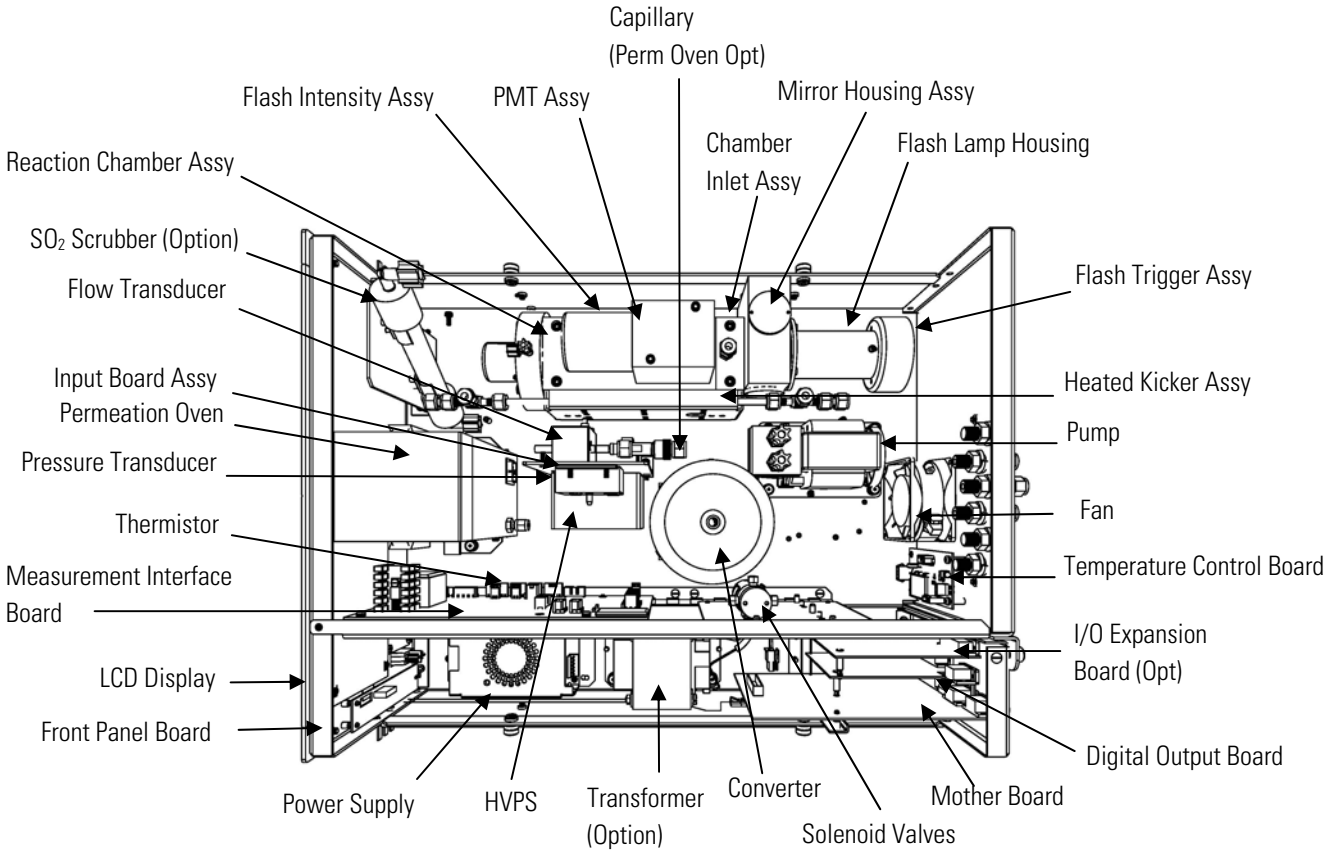

Figure 8–1. Hardware Components

Converter

The converter converts H_2S to SO_2 so that it can be measured. It consists of an insulated housing, heater wrap, and a K-type thermocouple sensor.

Temperature Control Board

The temperature control board regulates and sets the temperature of the reaction chamber and converter.

Selective SO_2 Scrubber

The selective SO_2 scrubber is used for H_2S only analysis, it removes SO_2 from the sample.

Heated Hydrocarbon Kicker

The hydrocarbon kicker removes hydrocarbons from the gas stream while leaving the SO_2 concentration unaffected. It operates on a selective permeation principle using differential pressure to force hydrocarbon molecules to pass through the tube wall. The differential pressure is created across the tube wall as sample gas passes through a capillary tube which reduces its pressure. The sample gas is then fed to the shell side of the hydrocarbon kicker. The heated kicker operates at the same temperature as the optical bench and requires no additional power.

Optics

The optics section provides the light source for the fluorescence reaction and optimizes the reaction with a system of lenses and mirrors. It includes a flash lamp, condensing lens, mirror assembly and light baffle.

Flash Lamp

The flash lamp provides the ultraviolet light source that causes the fluorescence reaction in the SO_2 molecules.

Condensing Lens

The condensing lens focuses light from the flash lamp into the mirror assembly.

Mirror Assembly

A set of eight mirrors selectively reflects only those wavelengths used in exciting SO_2 molecules. This reflective filtering causes the radiation reaching the detection chamber to be more intense and more stable throughout the lifetime of the instrument.

Light Baffle

The circular baffle helps keep stray light from entering the detection volume.

Flash Lamp Trigger Assembly

The flash lamp trigger assembly pulses the UV flash lamp at a rate of 10 times per second for improved signal-to-noise ratio and long term stability.

The lamp is operated in the pulsed mode for six major reasons:

- Long life
- High optical intensity – improved signal to noise ratio
- Small size
- Low power requirements – less than 1 watt

- Long-term stability
- Chopped signal processing – no dark current drift

Reaction Chamber

In the reaction chamber pulsating light from the flash lamp excites the SO_2 molecules. A condenser lens collects and focuses light from fluorescing SO_2 molecules onto the mirror assembly.

Bandpass Filter

The bandpass filter restricts the light reaching the photomultiplier tube to the SO_2 fluorescence wavelengths.

Photomultiplier Tube

The PMT converts optical energy from the reaction to an electrical signal. This signal is sent to the input board which transmits it to the processor.

Photodetector

The photodetector is located in the fluorescence chamber and continuously monitors the pulsating UV flash lamp. This photodetector is connected to a circuit that automatically compensates for fluctuations in flash lamp output.

Flow Sensor

The flow sensor is used for measuring the flow of sample gas in the measurement system.

Pressure Transducer

The pressure transducer or pressure sensor measures the reaction chamber pressure.

Capillary

The capillary along with the pump is used to control flow in the sample line.

Vacuum Pump

The vacuum pump draws the reacted gases out of the reaction chamber.

Permeation Oven (Option)

The permeation oven option allows the user to calibrate the Model 450*i* without requiring an external span gas. It uses either permeation tubes or diffusion tubes. This option is composed of a leak-tight oven with a glass tube where the permeation tubes or diffusion tubes are inserted. The glass tube is washed internally by a constant flow of zero gas that mixes with the analyte gas emanating from the tubes. This mixture is delivered to a

constant flow dilution system that allows the user to calculate the resultant concentration.

Software

The processor software tasks are organized into four areas:

- Instrument Control
- Monitoring Signals
- Measurement Calculations
- Output Communication

Instrument Control

Low-level embedded processors are used to control the various functions on the boards, such as analog and digital I/O and heater control. These processors are controlled over a serial interface with a single high-level processor that also controls the front-panel user interface. The low-level processors all run common firmware that is bundled with the high-level firmware and loaded on power-up if a different version is detected.

Each board has a specific address that is used to identify to the firmware what functions are supported on that board. This address is also used for the communications between the low-level processors and the high-level processor.

Every tenth of a second the frequency counters, analog I/O, and digital I/O are read and written to by the low-level processor. The counters are accumulated over the past second and the analog inputs are averaged over that second. The high-level processor polls the low-level processors once per second to exchange the measurement and control data.

Monitoring Signals

Signals are gathered from the low-level processors once per second, and then processed by the high-level processor to produce the final measurement values. The one-second accumulated counts representing the SO_2/CS concentrations are accumulated and reported for the user-specified averaging time. If this averaging time is greater than 60 seconds, the measurement is reported every 60 seconds. The one-second average of the other analog inputs are reported directly (no additional signal conditioning is performed by the high-level processor).

In auto mode, every 60 seconds the SO_2/CS solenoid switches and the processor waits 50 seconds for the reaction chamber to flush and stabilize. After this time, it accumulates the signal counts for 10 seconds before again switching the solenoid.

Measurement Calculations

The calculation begins by flashing the lamp 10 times per second. After the lamp flash, a sample and hold circuit on the input board is used to sample the PMT output. The raw accumulated counts are scaled according to the gain setting of the input board.

Next, the uncorrected values are determined according to a unique averaging algorithm which minimizes errors resulting from rapidly changing gas concentrations. This algorithm results in values which are stored in RAM in a circular buffer that holds all the ten second data from the previous five minutes. This data is averaged over the selected time interval, which can be selected values between 60 and 300 seconds.

The background values, which are corrected for temperature, are subtracted from their respective averages. The reading is corrected by the stored span factor and by the temperature factor.

Output Communication

The front panel display, serial and Ethernet data ports, and analog outputs are the means of communicating the results of the above calculations. The front panel display presents the SO_2, H_2S, and CS concentrations simultaneously. The display is updated every 10 seconds.

The analog output ranges are user selectable via software. The analog outputs are defaulted based on the measurement range. The defaults are calculated by dividing the data values by the full-scale range for each of the three parameters and then multiplying each result by the user-selected output range. Negative concentrations can be represented as long as they are within -5% of full-scale. The zero and span values may be set by the user to any desired value.

Electronics

All electronics operate from a universal switching supply, which is capable of auto-sensing the input voltage and working over the entire operating range.

The internal pump and heaters all operate on 110VAC. An optional transformer is required if operating on the 210-250VAC or 90-110VAC ranges.

An on/off switch controls all power to the instrument, and is accessible on the front panel.

Motherboard

The motherboard contains the main processor, power supplies, a sub-processor and serves as the communication hub for the instrument.

The motherboard receives operator inputs from the front panel mounted function key panel and/or over I/O connections on the rear panel and

sends commands to the other boards to control the functions of the instrument and to collect measurement and diagnostic information.

The motherboard outputs instrument status and measurement data to the front-panel mounted graphics display and to the rear-panel I/O.

The motherboard also contains I/O circuitry and the associated connector to monitor external digital status lines and to output analog voltages that represent the measurement data.

Connectors located on the motherboard include:

External Connectors

External connectors include:

- External Accessory
- RS-232/485 Communications (two connectors)
- Ethernet Communications
- I/O connector with Power Fail Relay, 16 Digital Inputs, and 6 Analog Voltage Outputs.

Internal Connectors

Internal connectors include:

- Function key panel and Display
- Measurement Interface Board Data
- I/O Expansion Board Data
- Digital Output Board
- AC distribution

Measurement Interface Board

The measurement interface board serves as a central connection area for all measurement electronics in the instrument. It contains power supplies and interface circuitry for sensors and control devices in the measurement system. It sends status data to the motherboard and receives control signals from the motherboard.

Measurement Interface Board Connectors

Connectors located on the measurement interface board include:

- Data communication with the motherboard
- 24V and 120VAC power supply inputs
- Fan and solenoid outputs
- 120VAC outputs for the pump and temperature control
- Flow and pressure sensors

- Ambient temperature sensor
- Temperature control board
- Bench heater
- PMT high voltage supply
- Input board
- Flash trigger
- Flash intensity
- Diagnostic LED

Flow Sensor Assembly

The flow sensor assembly consists of a board containing an instrumentation amplifier and a flow transducer with input and output gas fittings. The flow transducer output is produced by measuring the pressure difference across a precision orifice. This unit is used for measuring the flow of sample gas in the measurement system.

Pressure Sensor Assembly

The pressure sensor assembly consists of a board containing an instrumentation amplifier and a pressure transducer with a gas input fitting. The pressure transducer output is produced by measuring the pressure difference between the sample gas pressure and ambient air pressure.

Bench Heater

The fluorescence chamber temperature is measured with a thermistor. The voltage across the thermistor is fed to the main processor for use in calculating and displaying the temperature. The voltage across the thermistor is also compared to a set-point voltage and used to control the bench heaters to maintain a constant temperature.

Temperature Control Board

The temperature control board regulates and sets the temperature of the converter.

The converter temperature is measured by a conditioned thermocouple signal and fed back to the main processor to be used to display and control the converter temperature. The temperature control board receives control signals from the main processor software to control the converter heater to the desired set point. Protective circuitry prevents over heating in the event of broken wires to the thermocouple or processor faults.

PMT Power Supply Assembly

The PMT power supply produces high voltage to operate the photomultiplier tube used in the measurement system. The output voltage is adjustable from approximately 600 to 1200 volts under software control.

Diagnostic LED

The diagnostic LED is used to provide an alternate light source to the PMT to determine if the PMT is operating when the operating condition of the flash lamp is unknown.

Input Board

The input board accepts the current signal from the PMT and converts it to a voltage, which is scaled by a factor of approximately 1, 10, or 100 depending on the full-scale range of the SO_2 channel. The scaled voltage signal is converted to a frequency and sent to the microprocessor.

Digital Output Board

The digital output board connects to the motherboard and provides relay contact outputs to a connector located on the rear panel of the instrument. Ten relay contacts normally open (with power off) are provided which are electrically isolated from each other.

Front Panel Connector Board

The front panel connector board interfaces between the motherboard and the front panel mounted function key panel and Graphics display. It serves as central location to tie the three connectors required for the function key panel, the graphics display control lines, and the graphics display backlight to a single ribbon cable extending back to the motherboard. This board also includes signal buffers for the graphics display control signals and a high voltage power supply for the graphics display backlight.

Flash Trigger Board

The flash trigger board is located in the base of the flash lamp assembly. It receives high voltage and the trigger signal from the measurement interface board and uses a small transformer to produce a short, high-voltage pulse to fire the flash lamp.

Flash Intensity Board

The flash intensity board amplifies the lamp intensity signal detected by the photodetector which is used to control the lamp voltage.

I/O Expansion Board (Optional)

The I/O expansion board connects to the motherboard and adds the capability to input external analog voltage inputs and to output analog

currents via a connector located on the rear panel of the instrument. It contains local power supplies, a DC/DC isolator supply, a sub-processor and analog circuits. Eight analog voltage inputs are provided with an input voltage range of 0V to10VDC. Six current outputs are provided with a normal operating range of 0 to 20 mA.

I/O Components

External I/O is driven from a generic bus that is capable of controlling the following devices:

- Analog output (voltage and current)
- Analog input (voltage)
- Digital output (TTL levels)
- Digital input (TTL levels)

Note The instrument has spare solenoid valve drivers and I/O support for future expansion. ▲

Analog Voltage Outputs

The instrument provides six analog voltage outputs. Each may be software configured for any one of the following ranges, while maintaining a minimum resolution of 12 bits:

- 0-100mV
- 0-1V
- 0-5V
- 0-10V

The user can calibrate each analog output zero and span point through firmware. At least 5% of full-scale over and under range are also supported, but may be overridden in software if required.

The analog outputs may be assigned to any measurement or diagnostic channel with a user-defined range in the units of the selected parameter. The voltage outputs are independent of the current outputs.

Analog Current Outputs (Optional)

The optional I/O Expansion board includes six isolated current outputs. These are software configured for any one of the following ranges, while maintaining a minimum resolution of 11 bits:

- 0-20 mA
- 4-20 mA

The user can calibrate each analog output zero and span point through firmware. At least 5% of full-scale over and under range are also supported, but may be overridden in software if required.

The analog outputs may be assigned to any measurement or diagnostic channel with a user-defined range in the units of the selected parameter. The current outputs are independent of the voltage outputs. The current outputs are isolated from the instrument power and ground, but they share a common return line (Isolated GND).

Analog Voltage Inputs (Optional)

Eight analog voltage inputs are used to gather measurement data from third-party devices. The user may assign a label, unit, and a conversion table (2 to 10 points). Each point in the conversion table consists of an analog input voltage value (0-10.5 V) and a corresponding user-defined reading value. Only two points are necessary for linear inputs, however a larger number of points may be used to approximate non-linear inputs. All voltage inputs have a resolution of 12 bits over the range of 0 to 10.5 volts.

Digital Relay Outputs

The instrument includes one power fail relay on motherboard and ten digital output relays on the digital output board. These are reed relays rated for at least 500 mA @ 200VDC.

The power fail relay is Form C (both normally opened and normally closed contacts). All other relays are Form A (normally opened contacts) and are used to provide alarm status and mode information from the analyzer, as well as remote control to other devices, such as for controlling valves during calibration. The user may select what information is sent out each relay and whether the active state is opened or closed.

Digital Inputs

Sixteen digital inputs are available which may be programmed to signal instrument modes and special conditions including:

- SO_2 Measure Mode
- CS Measure Mode
- Zero Gas Mode
- Span Gas Mode
- Set Background
- Cal to low span

- Cal to high span
- Analog outputs to zero
- Analog outputs to full scale

The actual use of these inputs will vary based on analyzer configuration.

The digital inputs are TTL level compatible and are pulled up within the analyzer. The active state can be user defined in firmware.

Serial Ports

Two serial ports allow daisy chaining so that multiple analyzers may be linked using one PC serial port.

The standard bi-directional serial interface can be configured for either RS-232 or RS-485. The serial baud rate is user selectable in firmware for standard speeds from 1200 to 115200 baud. The user can also set the data bits, parity, and stop bits. The following protocols are supported:

- C-Link
- Modbus Slave
- Geysitech (Bayern-Hessen)
- Streaming Data

The Streaming Data protocol transmits user-selected measurement data via the serial port in real-time for capture by a serial printer, data logger, or PC.

RS-232 Connection

A null modem (crossed) cable is required when connecting the analyzer to an IBM Compatible PC. However, a straight cable (one to one) may be required when connecting the analyzer to other remote devices. As a general rule, when the connector of the host remote device is female, a straight cable is required and when the connector is male, a null modem cable is required.

Data Format:

1200, 2400, 4800, 9600, 19200, 38400, 57600, or 115200 BAUD

7 or 8 data bits

1 or 2 stop bits

No, odd, or even parity

All responses are terminated with a carriage return (hex 0D)

Refer to **Table 8–1** for the DB9 connector pin configuration.

Table 8–1. RS-232 DB9 Connector Pin Configurations

DB9 Pin	Function
2	RX
3	TX
7	RTS
8	CTS
5	Ground

RS-485 Connection

The instrument uses a four wire RS-485 configuration with automatic flow control (SD). Refer to **Table 8–2** for the DB9 connector pin configuration.

Table 8–2. RS-485 DB9 Connector Pin Configuration

DB9 Pin	Function
2	+ receive
8	- receive
7	+ transmit
3	- transmit
5	ground

Ethernet Connection

An RJ45 connector is used for the 10Mbs Ethernet connection supporting TCP/IP communications via standard IPV4 addressing. The IP address may be configured for static addressing or dynamic addressing (set using a DHCP server).

Any serial port protocols may be accessed over Ethernet in addition to the serial port. Up to three simultaneous connections are allowed per protocol.

External Accessory Connector

The external accessory connector is not used in the Model 450*i* analyzer.

This port is used in other models to communicate with smart external devices that may be mounted hundreds of feet from the analyzer using an RS-485 electrical interface.

Chapter 9
Optional Equipment

The Model 450*i* is available with the following options:

- "Internal Zero/Span and Sample Valves" on page 9-1
- "Internal Permeation Span Source" on page 9-3
- "Selective SO_2 Scrubber" on page 9-11
- "Teflon Particulate Filter" on page 9-11
- "I/O Expansion Board Assembly" on page 9-11
- "Terminal Block and Cable Kits" on page 9-11
- "Cables" on page 9-12
- "Mounting Options" on page 9-13

Internal Zero/Span and Sample Valves

With the zero/span assembly option (**Figure 9–1**), a source of span gas is connected to the SPAN port and a source of zero air is connected to the ZERO port (see **Figure 9–2** for dual span valve). Zero and span gas should be supplied at atmospheric pressure. It may be necessary to use an atmospheric dump bypass plumbing arrangement to accomplish this.

See the "Installation" and "Operation" chapters for more information.

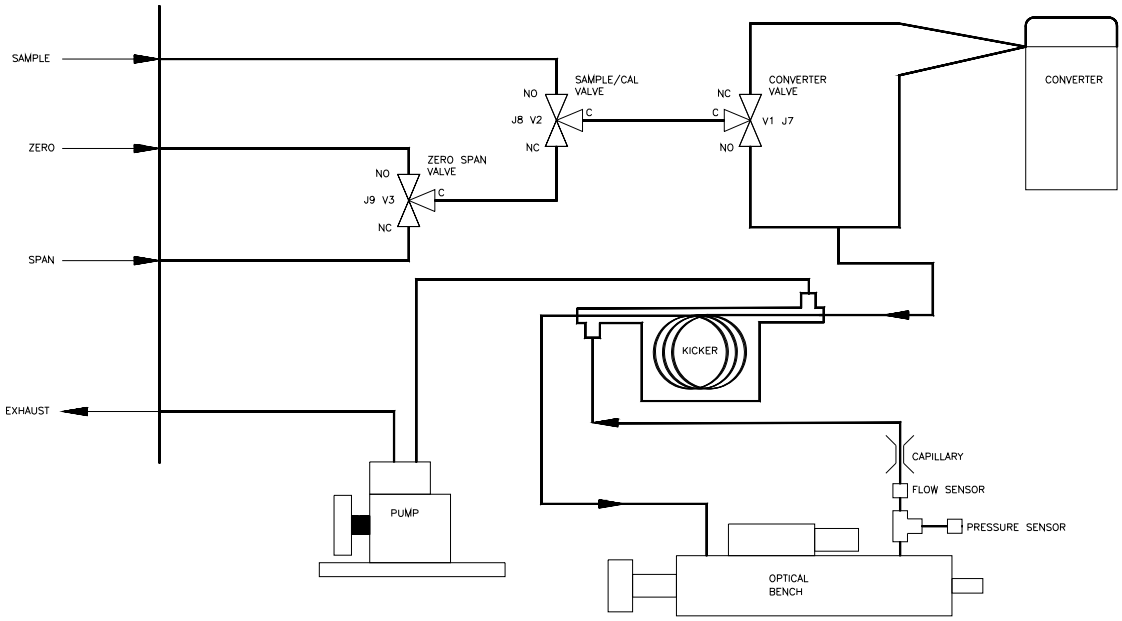

Figure 9–1. Zero/Span Valve Flow Schematic

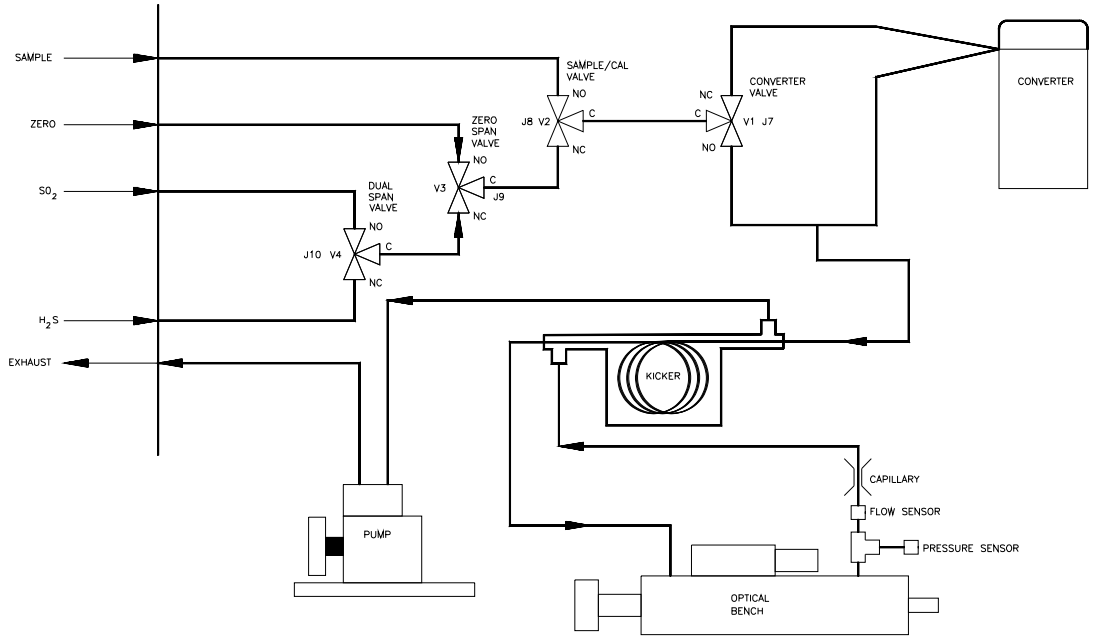

Figure 9–2. Zero/Span Dual Valve Flow Schematic

Internal Permeation Span Source

The Internal Permeation Span Source option is designed to provide a simple span check. This option is intended as a quick, convenient check to be used between zero and span calibrations for determining instrument malfunction or drift. Because this option does not precisely control dilution gas flow, it should not be used as a basis for instrument zero and span adjustments, calibration updates or adjustment of ambient data.

Whenever there is an indication of possible instrument drift or malfunction, a full zero and multipoint calibration (Level 1) should be performed prior to corrective action. For further information on zero, span and calibration of air pollution monitors, refer to Section 2.0.9 of the US EPA's *Quality Assurance Handbook for Air Pollution Measurement Systems (Volume II)*.

Figure 9–3 shows how this option is integrated with the Model 450*i* components. Energizing the sample valve V1 shuts off the sample flow and permits the flow of zero air for analysis. When valves V1 and V2 are energized, the flow of zero air mixes with air containing SO_2 from the permeation oven. This mode of operation provides a single point span check.

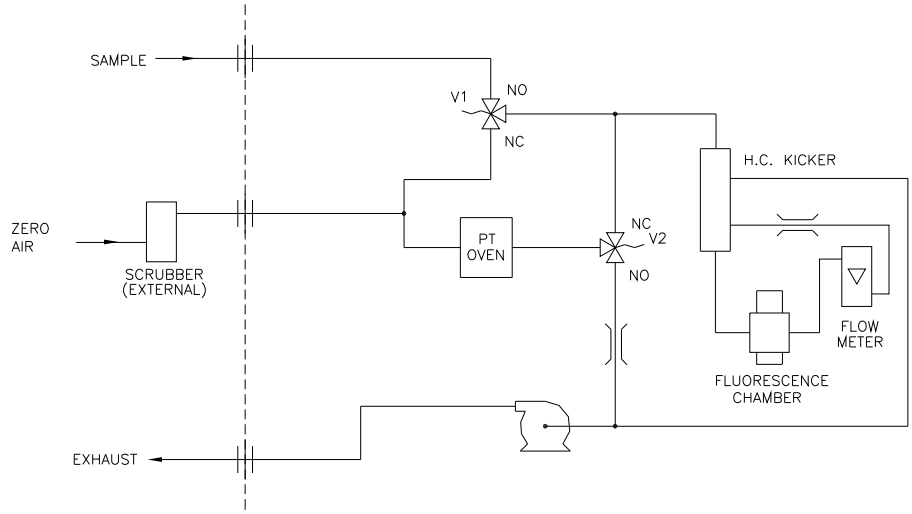

Figure 9–3. Internal Permeation Span Source Flow Diagram

Permeation Tube Installation

Use the following procedure to install the permeation tube.

1. Remove the oven cover.

2. Remove the glass chamber assembly by loosening the white plastic retaining collar, loosening (not removing) the knurled screw, and gently pulling the assembly upward. Completely remove the oven.

3. Separate the glass chamber from the top assembly by twisting and gently pulling the glass away from the top.

Note Keep the glass clean when handling it. ▲

4. Place the permeation tube(s) in the glass chamber.

5. Attach the glass chamber to the top assembly by gently pushing the two together with a slight twisting motion.

6. Replace the glass chamber assembly into the oven until the top of the assembly is flush or slightly below the top of the oven.

Equipment Damage Do not use tools to tighten the knurled screw in the following step. ▲

7. Tighten the knurled screw finger tight. Do not use tools to tighten.

8. Tighten the white plastic retaining collar.

9. Replace the oven cover being careful to place the tubing and wiring into the cover slot.

Computation of Concentrations

The computation of SO_2 or H_2S output level is shown in the following information. Note that is assumed that all devices are properly calibrated and that all flows are corrected to 25 °C and 1 atm.

Permeation Tube:

$$Output\ (ppm) = \frac{(R)\,(K)}{Q_o}$$

Where:

R = permeation rate in ng/min

Q_0 = flow rate of gas (scc/min) into the charcoal scrubber during span mode

K = constant for the specific permeant = 24.45 / MW

MW = molecular weight

$K(SO_2) = 0.382$ $K(H_2S) = 0.719$

Oven Installation and Configuration

Use the following procedure to install and configure the permeation oven.

1. Physically install the permeation oven and valves into the instrument and connect the cables and plumbing.

2. From the Perm Oven Settings menu in the Service menu, select **Perm Oven Selection**, then select **45 °C**.

3. Remove the thermistor from POJ1 on the measurement interface board.

4. Connect a resistance of approximately 4.2 KΩ across pins 1 and 2 of POJ1.

5. Go to the Factory Cal Gas Therm menu from the Perm Oven Settings menu in the Service menu. Select **Low Point**, enter the exact value of the resistor, wait 10 seconds for the reading to stabilize, then press ↵ to calibrate the low resistance point.

6. Press ■ to return to the Factory Cal Gas Therm menu.

7. Connect a resistance of approximately 5.0 KΩ across pins 1 and 2 of POJ1.

8. Go to the High Point screen, enter the exact value of the resistor, wait 10 seconds for the reading to stabilize, then press ↵ to calibrate the high resistance point.

9. Press ■ to return to the Factory Cal Gas Therm menu.

10. Remove resistor from POJ1 and re-attach the gas thermistor.

11. Connect a resistance of approximately 4.2 KΩ across pins 3 and 4 of POJ3.

12. Go to the Factory Cal Oven Therm menu from the Perm Oven Settings menu in the Service menu. Select **Low Point**, enter the exact value of the resistor, wait 10 seconds for the reading to stabilize, then press [↵] to calibrate the low resistance point.

13. Press [■] to return to the Factory Cal Oven Therm menu.

14. Connect a resistance of approximately 5.0 KΩ across pins 3 and 4 of POJ3.

15. Go to the High Point screen, enter the exact value of the resistor, wait 10 seconds for the reading to stabilize, then press [↵] to calibrate the high resistance point.

16. Press [■] to return to the Factory Cal Oven Therm menu.

17. Remove resistor from POJ3 and re-attach the permeation oven.

18. Perform a thermistor calibration using the "Permeation Tube Oven Calibration" procedure that follows.

Permeation Tube Oven Calibration

There are two general approaches that can be used to calibrate the permeation tube oven. The first is to calibrate the temperature indicator very accurately (to better than 0.02 °C) and to use a permeation tube whose weight loss has been previously determined at that temperature.

Note An error of approximately 0.1 °C corresponds to an error of 1% in release rate. ▲

The second approach is to note that the thermistors used to measure temperature are interchangeable to better than ±0.2 °C. Thus a 1% resistor of the proper value (4.367 KΩ for 45 °C) can be used to set the span on the measurement interface board. The release rate for the permeation tube is then determined by weight loss in the actual oven being used.

Setting Perm Oven Temperature

You can use either of the two calibration methods presented here. One method involves performing the "Setting Perm Oven Temperature" procedure and then continuing with the "Setting Temperature with Water Bath" procedure.

Alternatively, you can perform the "Setting Perm Oven Temperature" procedure and then continue with the "Setting Temperature with Known Resistance" procedure.

In either case, use the following procedure for setting the perm oven temperature.

1. Unplug POJ3 from the measurement interface board. Place a 4.367 KΩ resistor across pins 3 and 4 on the board.

2. From the Permeation Oven menu in the Service menu, select **Cal Oven Thermistor** (**Figure 9–4**).

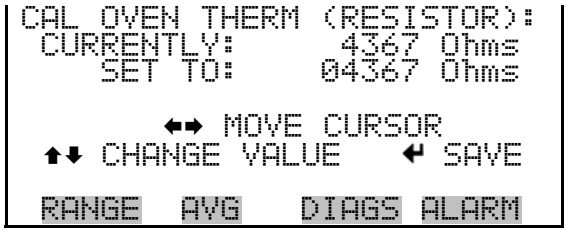

Figure 9–4. Cal Oven Therm Resistor Screen

3. Enter the exact value of the attached resistor and press ↵ to save the offset.

4. Press ◣ to return to the Permeation Oven menu.

5. Remove the resistor and re-attach the permeation oven to POJ3.

Setting Temperature with Water Bath

Use the following procedure for setting the measure temperature with water bath.

1. Remove the thermistor from the permeation tube oven, but leave the thermistor connected to the measurement interface board. Insert the thermistor into the water bath next to an NIST traceable thermometer (if necessary, use an extension cable to reach).

2. Turn on the power to the water bath. Using an NIST traceable thermometer with a resolution of ±0.01 °C, adjust the water bath to 45 °C.

3. From the Permeation Oven menu, in the Service menu, select Cal Gas Thermistor > **Water Bath**. Enter the thermistor temperature from the thermometer and press [↵] (**Figure 9–5**).

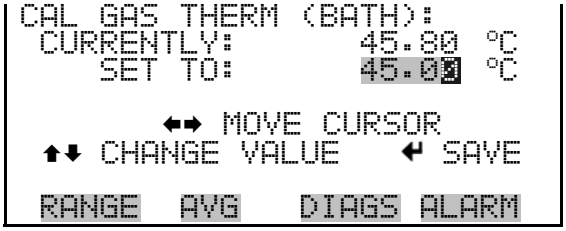

Figure 9–5. Cal Gas Therm Bath Screen

4. Remove the thermistor from the water bath, dry, and replace the permeation tube oven.

5. Make sure the charcoal scrubber is connected to the ZERO bulkhead on the rear panel.

6. Wait for the permeation gas temperature reading to stabilize.

Setting Temperature with Known Resistance

Use the following procedure to set the gas temperature with an accurate known resistance.

1. Remove the thermistor from POJ1 on the measurement interface board.

2. Connect a 4.465 KΩ resistor across pins 1 and 2 of POJ1 (use a resistance substitution box and an accurate meter, if necessary).

3. From the Permeation Oven menu, select **Cal Gas Thermistor**, then select known resistor (**Figure 9–6**).

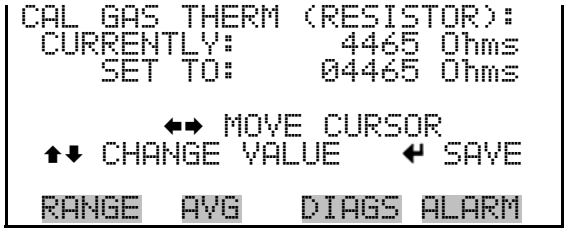

Figure 9–6. Cal Gas Therm Resistor Screen

4. Enter the exact value of the attached resistor and press ↵ to save the offset.

5. Remove the resistor and reconnect the gas thermistor.

6. Make sure the charcoal scrubber is connected to the ZERO bulkhead on the rear panel.

7. Wait for the permeation gas temperature reading to stabilize.

Determining Permeation Rate by Weight Loss

Use the following procedure to determine the permeation rate by weight loss.

1. Make sure the oven has been calibrated as described in the "Permeation Tube Oven Calibration" procedure described previously.

2. Insert the permeation tube carefully. Do not touch with fingers.

3. Turn on the instrument.

4. Wait 48-72 hours for the permeation tube to stabilize.

5. Carefully remove the permeation tube from the oven and weigh to an accuracy of 0.1mg. Perform this measurement as quickly as possible.

6. Replace the permeation tube into the oven of the instrument.

7. Repeat Steps 5 and 6 after two weeks.

8. Compute the weight loss of the permeation tube from the values determined in Steps 5 through 7.

9. Repeat Steps 5 through 8 until the weight loss has been determined to a precision of 1-2%.

10. For the most accurate work, use the permeation tube in the same oven that was used to determine the weight loss of permeation tube.

Determining Release Rate by Transfer Standard

Use the following procedure to determine the release rate by transfer standard.

1. Make sure the oven has been calibrated as described in the "Permeation Tube Oven Calibration" procedure described previously. Also make sure that the Transfer Standard has been properly calibrated.

2. Determine the permeation rate for the permeation tube in the Transfer Standard, or install a certified permeation tube.

3. Allow the permeation tubes in both the 450*i* and the Transfer Standard to stabilize for at least 48 hours.

4. Carefully calibrate the 450*i* using the Transfer Standard. The output of the Transfer Standard should be connected to the SAMPLE bulkhead on the rear panel of the 450*i*.

5. Switch the calibrated 450*i* into the span mode.

6. Measure the flow rate into the ZERO bulkhead on the rear panel of the 450*i*. Be sure that the charcoal scrubber is connected. Note the flow and measured SO_2 or H_2S concentration.

7. From the flow and measured concentration, compute the permeation tube release rate.

Selective SO_2 Scrubber

The selective SO_2 scrubber is used for H_2S only analysis, it removes SO_2 from the sample.

Teflon Particulate Filter

A 5-10 micron pore size, two-inch diameter Teflon® element is available for the Model 450*i*. This filter should be installed just prior to the SAMPLE bulkhead. When using a filter, all calibrations and span checks must be performed through the filter.

I/O Expansion Board Assembly

The I/O expansion board provides six analog current output channels (0-20 mA or 4-20 mA) and eight analog voltage inputs (0-10V). The DB25 connector on the rear panel provides the interface for these inputs and outputs.

25-Pin Terminal Board Assembly

The 25-pin terminal board assembly is included with the optional I/O expansion board. Refer to "Terminal Board PCB Assemblies" in the Installation" chapter for information on attaching the cable to the connector board. For associated part numbers, refer to the "Servicing" chapter.

Terminal Block and Cable Kits

The optional terminal block and cable kits provide a convenient way to connect devices to the instrument. These kits break out the signals on the rear panel connector to individual numbered terminals.

Two types of terminal block and cable kits are available. One kit is for the DB37 connectors and can be used for either the analog output connector or the relay output connector. The other kit is for the DB25 connector and can be used for the optional I/O expansion board. For associated part numbers, refer to the "Servicing" chapter.

Each kit consists of:

- one six-foot cable
- one terminal block
- one snap track

Note Supporting all of the connections on units with the optional I/O expansion board requires:

- two DB37 kits
- one DB25 kit

Cables

Table 9–1 identifies the optional individual cables that are available for the instrument and **Table 9–2** provides the cable color codes. For associated part numbers, refer to the Servicing chapter.

Note Table 9–2 provides the color coding for both 25-pin cables and 37-pin cables. Color codes for pins 1-25 are for 25-pin cables; color codes for pins 1-37 are for 37-pin cables. ▲

Table 9–1. Cable Options

Description	Cable Length
DB37M to open end	Six feet
DB37F to open end	Six feet
DB25M to open end	Six feet
RS-232	

Table 9–2. Color Codes for 25-Pin and 37-Pin Cables

Pin	Color	Pin	Color
1	BLACK	20	RED/BLACK
2	BROWN	21	ORANGE/BLACK
3	RED	22	YELLOW/BLACK
4	ORANGE	23	GREEN/BLACK
5	YELLOW	24	GRAY/BLACK
6	GREEN	25	PINK/BLACK
7	BLUE	End color codes for 25-pin cables continue for 37-pin cables.	
8	VIOLET	26	PINK/GREEN
9	GRAY	27	PIND/RED
19	WHITE	28	PINK/VIOLET
11	PINK	29	LIGHT BLUE
12	LIGHT GREEN	30	LIGHT BLUE/BROWN
13	BLACK/WHITE	31	LIGHT BLUE/RED
14	BROWN/WHITE	32	LIGHT BLUE/VIOLET
15	RED/WHITE	33	LIGHT BLUE/BLACK
16	ORANGE/WHITE	34	GRAY/GREEN

Pin	Color	Pin	Color
17	GREEN/WHITE	35	GRAY/RED
18	BLUE/WHITE	36	GRAY/VIOLET
19	VIOLET/WHITE	37	LIGHT GREEN/BLACK

Mounting Options

The analyzer can be installed in the configuration described in **Table 9–3** and shown in **Figure 9–7** through **Figure 9–10**.

Table 9–3. Mounting Options

Mounting Type	Description
Bench	Positioned on bench, includes mounting feet, and front panel side-trim handles.
EIA rack	Mounted in an EIA-style rack, includes mounting slides, and front panel EIA-rack mounting handles.
Retrofit rack	This configuration is intended for replacement of a C-Series instrument in an existing rack. The rail mounting location is lower on the case and the front mounting screw slots are in non-standard EIA locations.

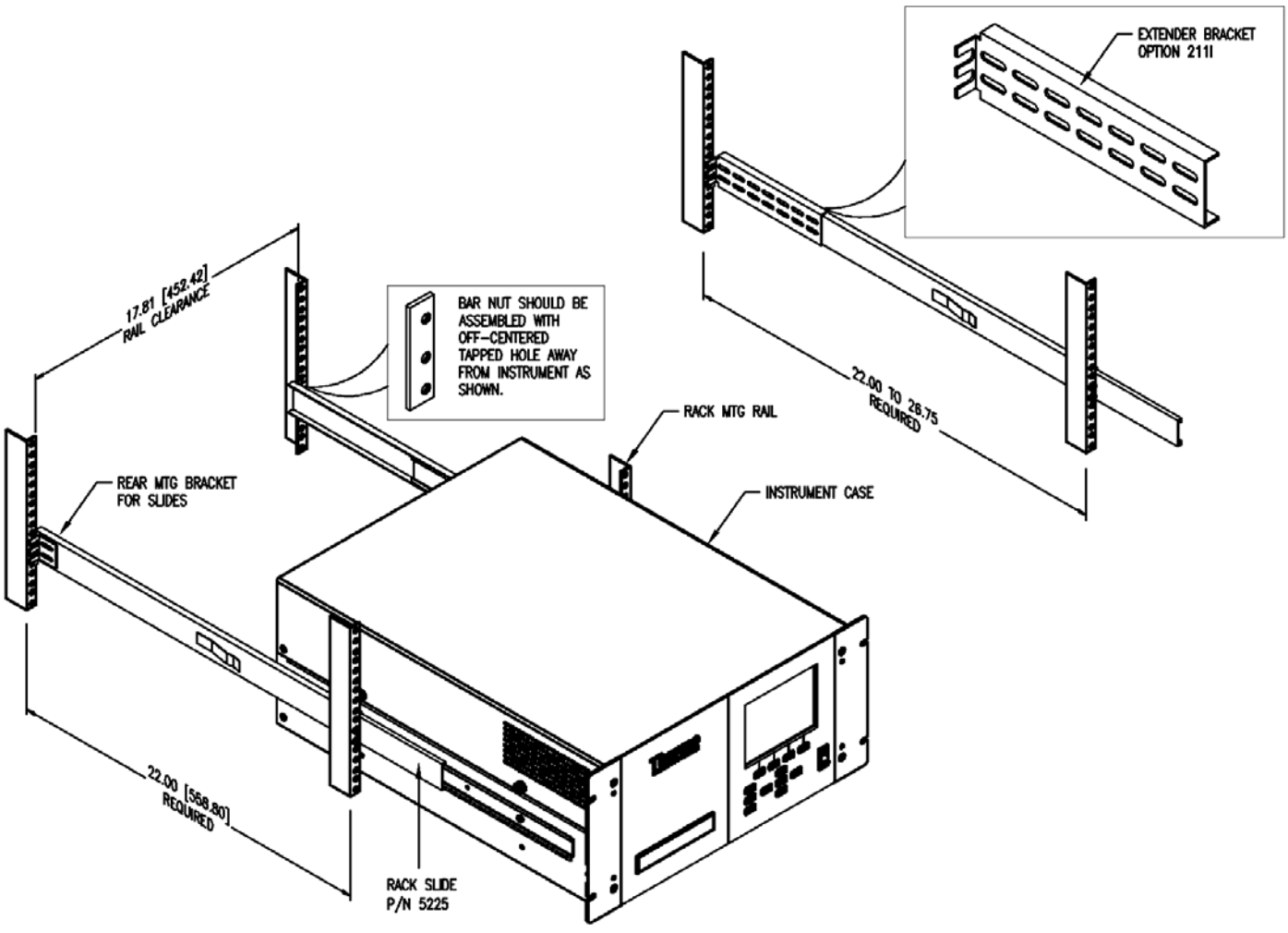

Figure 9–7. Rack Mount Option Assembly

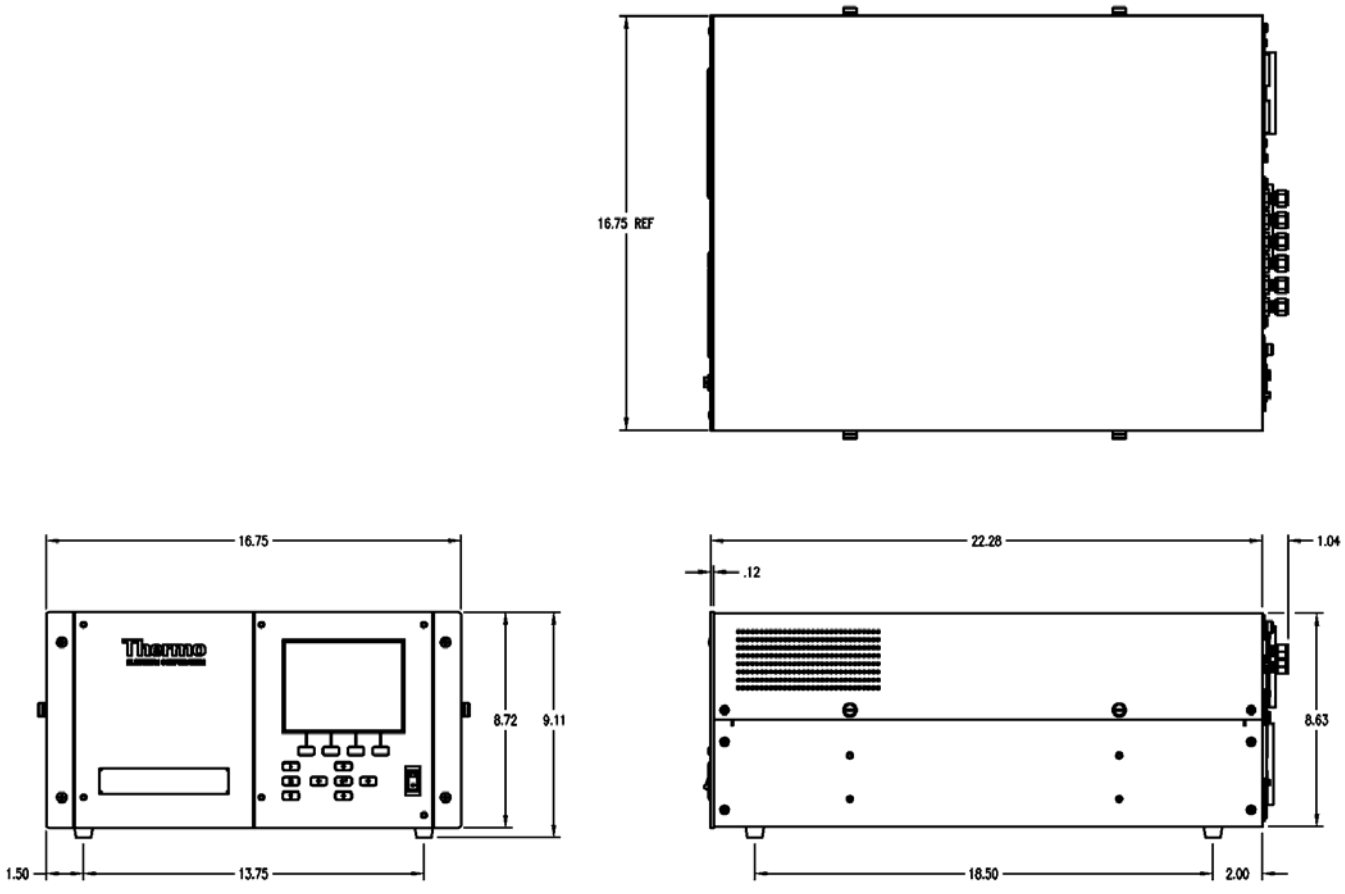

Figure 9–8. Bench Mounting

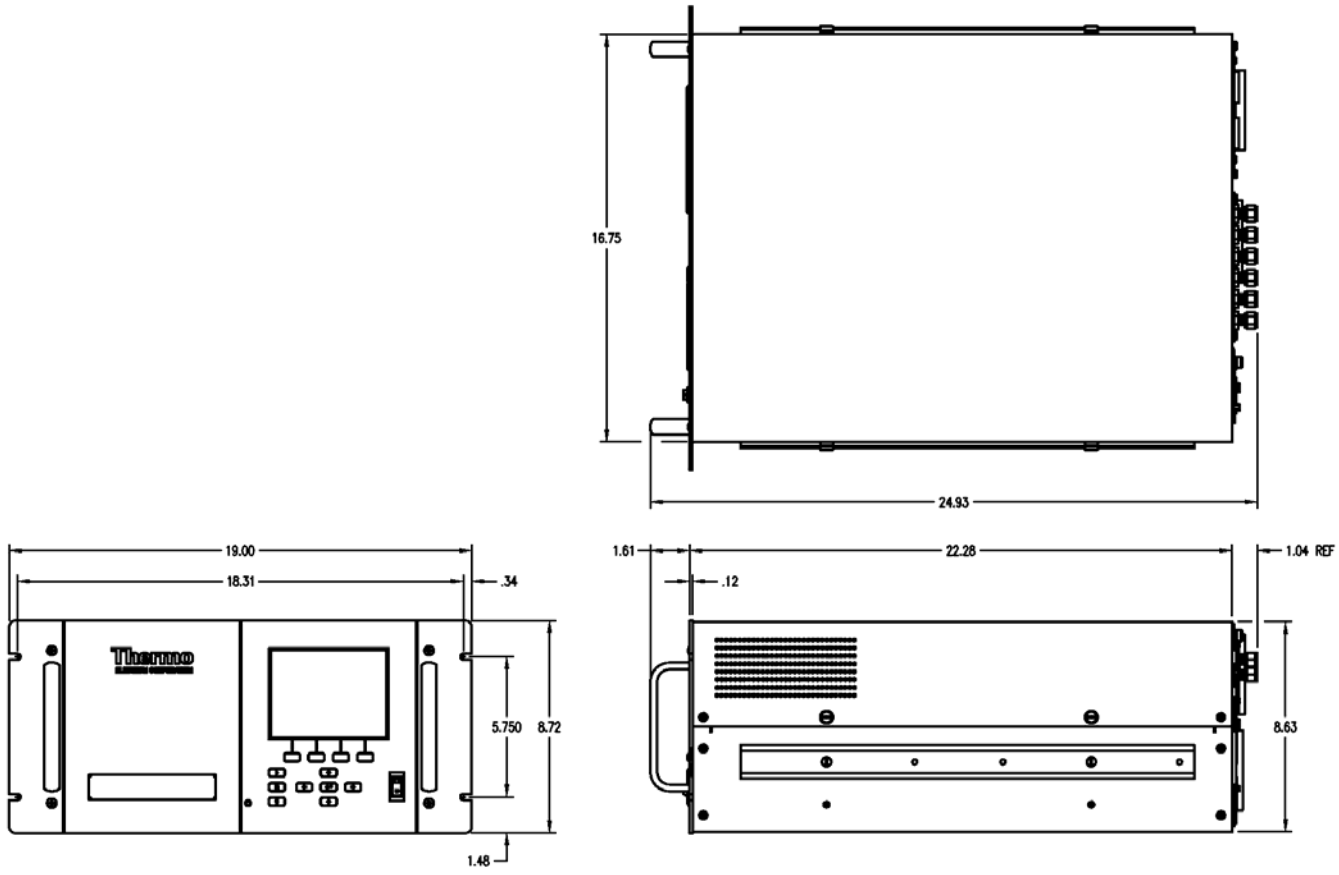

Figure 9–9. EIA Rack Mounting

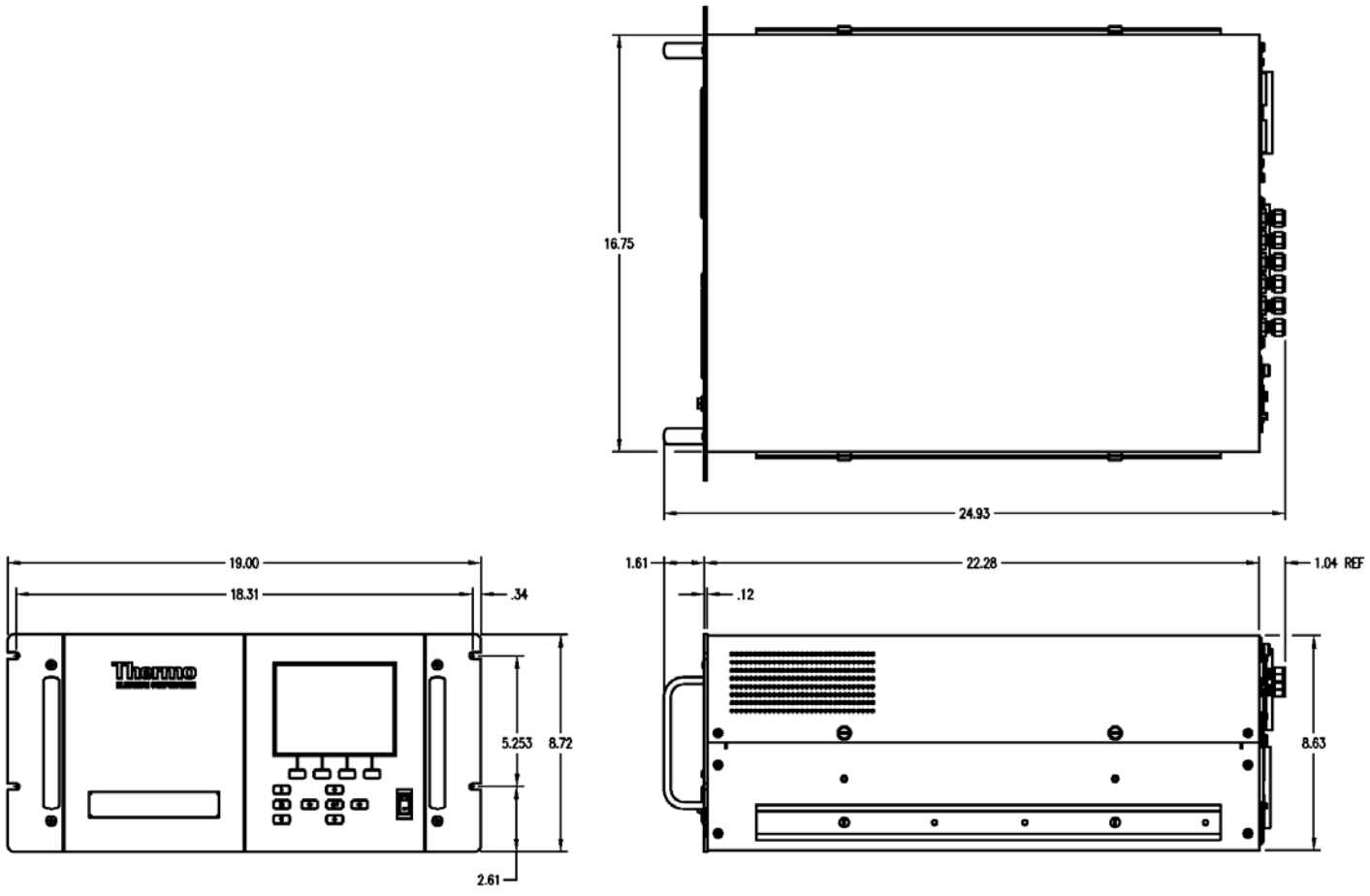

Figure 9–10. Retrofit Rack Mounting

Appendix A
Warranty

Seller warrants that the Products will operate or perform substantially in conformance with Seller's published specifications and be free from defects in material and workmanship, when subjected to normal, proper and intended usage by properly trained personnel, for the period of time set forth in the product documentation, published specifications or package inserts. If a period of time is not specified in Seller's product documentation, published specifications or package inserts, the warranty period shall be one (1) year from the date of shipment to Buyer for equipment and ninety (90) days for all other products (the "Warranty Period"). Seller agrees during the Warranty Period, to repair or replace, at Seller's option, defective Products so as to cause the same to operate in substantial conformance with said published specifications; provided that (a) Buyer shall promptly notify Seller in writing upon the discovery of any defect, which notice shall include the product model and serial number (if applicable) and details of the warranty claim; (b) after Seller's review, Seller will provide Buyer with service data and/or a Return Material Authorization ("RMA"), which may include biohazard decontamination procedures and other product-specific handling instructions; and (c) then, if applicable, Buyer may return the defective Products to Seller with all costs prepaid by Buyer. Replacement parts may be new or refurbished, at the election of Seller. All replaced parts shall become the property of Seller. Shipment to Buyer of repaired or replacement Products shall be made in accordance with the Delivery provisions of the Seller's Terms and Conditions of Sale. Consumables, including but not limited to lamps, fuses, batteries, bulbs and other such expendable items, are expressly excluded from the warranty under this warranty.

Notwithstanding the foregoing, Products supplied by Seller that are obtained by Seller from an original manufacturer or third party supplier are not warranted by Seller, but Seller agrees to assign to Buyer any warranty rights in such Product that Seller may have from the original manufacturer or third party supplier, to the extent such assignment is allowed by such original manufacturer or third party supplier.

In no event shall Seller have any obligation to make repairs, replacements or corrections required, in whole or in part, as the result of (i) normal wear and tear, (ii) accident, disaster or event of force majeure, (iii) misuse, fault or negligence of or by Buyer, (iv) use of the Products in a manner for which

they were not designed, (v) causes external to the Products such as, but not limited to, power failure or electrical power surges, (vi) improper storage and handling of the Products or (vii) use of the Products in combination with equipment or software not supplied by Seller. If Seller determines that Products for which Buyer has requested warranty services are not covered by the warranty hereunder, Buyer shall pay or reimburse Seller for all costs of investigating and responding to such request at Seller's then prevailing time and materials rates. If Seller provides repair services or replacement parts that are not covered by the warranty provided in this warranty, Buyer shall pay Seller therefor at Seller's then prevailing time and materials rates. ANY INSTALLATION, MAINTENANCE, REPAIR, SERVICE, RELOCATION OR ALTERATION TO OR OF, OR OTHER TAMPERING WITH, THE PRODUCTS PERFORMED BY ANY PERSON OR ENTITY OTHER THAN SELLER WITHOUT SELLER'S PRIOR WRITTEN APPROVAL, OR ANY USE OF REPLACEMENT PARTS NOT SUPPLIED BY SELLER, SHALL IMMEDIATELY VOID AND CANCEL ALL WARRANTIES WITH RESPECT TO THE AFFECTED PRODUCTS.

THE OBLIGATIONS CREATED BY THIS WARRANTY STATEMENT TO REPAIR OR REPLACE A DEFECTIVE PRODUCT SHALL BE THE SOLE REMEDY OF BUYER IN THE EVENT OF A DEFECTIVE PRODUCT. EXCEPT AS EXPRESSLY PROVIDED IN THIS WARRANTY STATEMENT, SELLER DISCLAIMS ALL OTHER WARRANTIES, WHETHER EXPRESS OR IMPLIED, ORAL OR WRITTEN, WITH RESPECT TO THE PRODUCTS, INCLUDING WITHOUT LIMITATION ALL IMPLIED WARRANTIES OF MERCHANTABILITY OR FITNESS FOR ANY PARTICULAR PURPOSE. SELLER DOES NOT WARRANT THAT THE PRODUCTS ARE ERROR-FREE OR WILL ACCOMPLISH ANY PARTICULAR RESULT.

.

Appendix B
C-Link Protocol Commands

This appendix provides a description of the C-Link protocol commands that can be used to remotely control a Model 450*i* analyzer using a host device such as a PC or a datalogger. C-Link protocol may be used over RS-232, RS-485, or Ethernet. C-Link functions can be accessed over Ethernet using TCP/IP port 9880. Streaming data may be accessed over Ethernet using TCP/IP port 9881. Up to three simultaneous connections per protocol may be made over Ethernet.

- "Instrument Identification Number" on page B-1
- "Commands" on page B-2
- "Measurements" on page B-11
- "Alarms" on page B-15
- "Diagnostics" on page B-20
- "Datalogging" on page B-21
- "Calibration" on on page B-30
- "Keys/Display" on page B-33
- "Measurement Configuration" on page B-35
- "Hardware Configuration" on page B-40
- "Communications Configuration" on page B-43
- "I/O Configuration" on page B-50
- "Record Layout Definition" on page B-55

Instrument Identification Number

Each command sent to the analyzer must begin with the American Standard Code for Information Interchange (ASCII) symbol or byte value equivalent of the instrument's identification number plus 128. For example, if the instrument ID is set to 45, then each command must begin with the ACSII character code 173 decimal. The analyzer ignores any command that does not begin with its instrument identification number. If the instrument ID is set to 0, then this byte is not required. For more information on changing Instrument ID, see Chapter 3, "Operation".

Commands

The analyzer must be in the remote mode in order to change instrument parameters via remote. However, the command "set mode remote" can be sent to the analyzer to put it in the remote mode. Report commands (commands that don't begin with "set") can be issued either in the remote or local mode. For information on changing modes, see Chapter 3, "Operation."

The commands can be sent in either uppercase or lowercase characters. Each command must begin with the proper instrument identification number (ASCII) character. The command in the example that follows begins with the ASCII character code 173 decimal, which directs the command to the Model 450*i,* and is terminated by a carriage return "CR" (ASCII character code 13 decimal).

<ASCII 173>	T	I	M	E	<CR>

If an incorrect command is sent, a "bad command" message will be received. The example that follows sends the incorrect command "set unit ppm" instead of the correct command "`set gas unit ppm`."

```
Send:          set unit ppm
Receive:       set unit ppm bad cmd
```

Table B–1 provides a description of the command response errors.

Table B–1. Command Response Error Descriptions

Command Response	Description
too high	Supplied value is higher than the upper limit
too low	Supplied value is lower than the lower limit
invalid string	Supplied string invalid (typically because a letter was detected when the value should be numeric)
data not valid	Supplied value is not acceptable for entered command
can't, wrong settings	Command not allowed for current measurement mode
can't, mode is service	Command not allowed while instrument is in service mode

The "save" and "set save params" commands "stores parameters in FLASH. It is important that each time instrument parameters are changed, that this command be sent. If changes are not saved, they will be lost in the event of a power failure.

Accessing Streaming Data

Streaming data is sent out the serial port or the Ethernet port on a user-defined periodic basis. Streaming data over Ethernet is only generated when a connection is made on TCP port 9881. Up to three simultaneous connections per protocol may be made over Ethernet.

Entering Units in PPB

When interfacing to an instrument via C-link commands, always enter the concentration values in ppb or µg/m^3 units. For example, to set a background value to 20 ppm, enter 20000 (ppb) as the value for the set background command.

Service Mode

If the Service Mode is active, C-Link "set" commands are not allowed. This is to prevent parameters from being changed remotely while the unit is being serviced locally.

Commands List

Table B–2 lists the 450*i* C-Link protocol commands. The interface will respond to the associated command strings.

Table B–2. C-Link Protocol Commands

Command	Description	Page
addr dns	Reports/sets dns address	B-43
addr gw	Reports/sets default gateway address	B-43
addr ip	Reports/sets IP address	B-44
addr nm	Reports/sets netmask address	B-44
addr ntp	Reports the IP address for the NTP time server	B-44
agc int	Reports current AGC intensity	B-20
alarm chamber temp max	Reports/sets chamber temperature alarm maximum value	B-15
alarm chamber temp min	Reports/sets chamber temperature alarm minimum value	B-15
alarm conc cs max	Reports/sets current CS concentration alarm maximum value	B-15
alarm conc cs min	Reports/sets current CS concentration alarm minimum value	B-15
alarm conc h2s max	Reports/sets current H_2S concentration alarm maximum value	B-15
alarm conc h2s min	Reports/sets current H_2S concentration alarm minimum value	B-15
alarm conc so2 max	Reports/sets current SO_2 concentration alarm maximum value	B-15
alarm conc so2 min	Reports/sets current SO_2 concentration alarm minimum value	B-15
alarm converter	Reports/sets SO_2 converter temperature alarm maximum value	B-16

Command	Description	Page
temp max		
alarm converter temp min	Reports/sets SO_2 converter temperature alarm minimum value	B-16
alarm internal temp max	Reports/sets internal temperature alarm maximum value	B-16
alarm internal temp min	Reports/sets internal temperature alarm minimum value	B-16
alarm lamp intensity max	Reports/sets lamp intensity alarm maximum value	B-17
alarm lamp intensity min	Reports/sets lamp intensity alarm minimum value	B-17
alarm lamp voltage max	Reports/sets lamp voltage alarm maximum value	B-17
alarm lamp voltage min	Reports/sets lamp voltage alarm minimum value	B-17
alarm pgas temp max	Reports/sets perm gas alarm maximum value	B-17
alarm pgas temp min	Reports/sets perm gas alarm minimum value	B-18
alarm pressure max	Reports/sets alarm pressure maximum value	B-18
alarm pressure min	Reports/sets alarm pressure minimum value	B-18
alarm sample flow max	Reports/sets sample flow alarm maximum value	B-19
alarm sample flow min	Reports/sets sample flow alarm minimum value	B-19
alarm trig conc cs	Reports/sets CS current concentration alarm trigger sense	B-19
alarm trig conc h2s	Reports/sets H2s current concentration alarm trigger sense	B-19
alarm trig conc so2	Reports/sets SO_2 current concentration alarm trigger sense	B-19
allow mode cmd	Reports/sets the current set allow mode command	B-48
analog iout range	Reports/sets analog current output range per channel	B-50
analog vin	Retrieves analog voltage input data per channel	B-51
analog vout range	Reports/sets analog voltage output range per channel	B-50
avg time	Reports/sets averaging time	B-11
baud	Reports/sets current baud rate	B-45
bkg cs	Reports/sets current CS background	B-31

Command	Description	Page
bkg so2	Reports/sets current SO_2 background	B-31
cal cs bkg	Sets/auto-calibrates CS background	B-30
cal cs coef	Sets/auto-calibrates CS coefficient	B-30
cal h2s coef	Sets/auto-calibrates H2S coefficient	B-30
cal high cs coef	Sets/auto-calibrates high range CS coefficient	B-30
cal high h2s coef	Sets/auto-calibrates high range H2S coefficient	B-30
cal high so2 coef	Sets/auto-calibrates high range SO_2 coefficient	B-30
cal low cs coef	Sets/auto-calibrates low range CS coefficient	B-30
cal low h2s coef	Sets/auto-calibrates low range H2S coefficient	B-30
cal low so2 coef	Sets/auto-calibrates low range SO_2 coefficient	B-30
cal perm gas offset res	Sets/calibrates permeation gas temperature sensor offset using a calibrating resistor in ohms	B-32
cal perm gas offset temp	Sets/calibrates permeation gas temperature sensor offset to a temperature of degrees C	B-33
cal perm oven offset res	Sets/calibrates permeation oven temperature sensor offset using a calibrating resistor in ohms	B-33
cal so2 bkg	Sets/auto-calibrates SO_2 background	B-31
cal so2 coef	Sets/auto-calibrates SO_2 coefficient	B-30
clr lrecs	Clears away only long records that have been saved	B-22
clr records	Clears away all logging records that have been saved	B-21
clr srecs	Clears away only short records that have been saved	B-22
coef cs	Reports/sets current CS coefficient	B-30
coef h2s	Reports/sets current H_2S coefficient	B-30
coef so2	Reports/sets current SO_2 coefficient	B-30
contrast	Reports/sets current screen contrast	B-40
conv set temp	Reports/sets temperature setpoint for SO_2 converter	B-41
conv temp	Reports current SO_2 converter temperature	B-12
copy lrec to sp	Sets/copies current lrec selection into the scratch pad	B-28
copy sp to lrec	Sets/copies current selections in scratch pad into lrec list	B-27
copy sp to srec	Sets/copies current selections in scratch pad into srec list	B-27
copy sp to stream	Sets/copies current selections in scratch pad into stream list	B-27
copy srec to sp	Sets/copies current srec selection into the scratch pad	B-28
copy stream to sp	Sets/copies current streaming data selection into the scratch pad	B-28
cs	Reports current CS concentration	B-12

Command	Description	Page
cs bkg	Reports/sets current CS background	B-31
cs coef	Reports/sets current CS coefficient	B-30
custom	Reports/sets defined custom range concentration	B-36
data treatment lrec/srec	Reports/sets the current selection of data treatment for concentrations in the lrecs or srecs	B-27
date	Reports/sets current date	B-41
default params	Sets parameters to default values	B-41
dhcp	Reports/sets state of use of DHCP	B-45
diag volt iob	Reports diagnostic voltage level for I/O expansion board	B-20
diag volt mb	Reports diagnostic voltage level for motherboard	B-20
diag volt mib	Reports diagnostic voltage level for measurement interface board	B-20
dig in	Reports status of the digital inputs	B-51
din	Reports/sets digital input channel and active state	B-51
do (down)	Simulates pressing down pushbutton	B-33
dout	Reports/sets digital output channel and active state	B-51
dtoa	Reports outputs of the digital to analog converters per channel	B-53
en (enter)	Simulates pressing enter pushbutton	B-33
er	Returns a brief description of the main operating conditions in the format specified in the commands	B-23
erec	Returns a snapshot of the main operating conditions (measurements and status) in the specified format	B-23
erec format	Reports/sets erec format (ASCII or binary)	B-24
erec layout	Reports current layout of erec data	B-25
flags	Reports 8 hexadecimal digits (or flags) that represent the status of the ozonator, PMT, gas mode, and alarms	B-14
flow	Reports current measured sample flow in LPM	B-12
format	Reports/sets current reply termination format	B-46
gas mode	Reports current mode of sample, zero, or span	B-37
gas unit	Reports/sets current gas units	B-38
gu	Sets current gas units	B-38
h2s	Reports current H_2S concentration	B-12
h2s coef	Reports/sets current H_2S coefficient	B-30
he (help)	Simulates pressing help pushbutton	B-33
high avg time	Reports/sets high range averaging time	B-11

Command	Description	Page
high cs	Reports CS concentration calculated with high range coefficients	B-12
high cs coef	Reports/sets high range CS coefficients	B-31
high h2s	Reports H_2S concentration calculated with high range coefficients	B-12
high h2s coef	Reports/sets high range H_2S coefficients	B-31
high range	Reports/sets high range	B-35
high range cs	Reports/sets CS high range	B-35
high range h2s	Reports/sets H_2S high range	B-35
high range so2	Reports/sets SO_2 high range	B-35
high so2	Reports SO_2 concentration calculated with high range coefficients	B-12
high so2 coef	Reports/sets high range SO_2 coefficients	B-31
high sp conc	Reports/sets high span concentration	B-32
high sp conc cs	Reports/sets high span CS concentration	B-32
high sp conc h2s	Reports/sets high span H_2S concentration	B-32
high sp conc so2	Reports/sets high span SO_2 concentration	B-32
host name	Reports/sets host name string	B-47
instr name	Reports instrument name	B-47
instrument id	Reports/sets instrument id	B-47
internal temp	Reports current internal instrument temperature	B-13
isc (iscreen)	Retrieves framebuffer data used for the display	B-33
lamp int	Reports the current lamp intensity	B-21
lamp setpoint	Reports/sets flash lamp setpoint	B-20
lamp status	Reports/sets flash lamp status on or off	B-41
lamp voltage	Reports flash lamp voltage	B-21
lamp, set	Sets the flash lamp ON or OFF	B-42
layout ack	Disables stale layout/layout changed indicator ('*')	B-50
le (left)	Simulates pressing left pushbutton	B-33
led status (led)	Reports/sets optical test LED status on or off	B-21
list din	Lists current selection for digital input	B-22
list dout	Lists current selection for digital output	B-22
list lrec	Lists current selection lrec logging data	B-22
list sp	Lists current selection in the scratchpad list	B-22
list srec	Lists current selection srec logging data	B-22

Command	Description	Page
list stream	Lists current selection streaming data output	B-22
list var aout	Reports list of analog output, index numbers, and variables	B-54
list var din	Reports list of digital input, index numbers, and variables	B-54
list var dout	Reports list of digital output, index numbers, and variables	B-54
low avg time	Reports/sets low averaging time	B-11
low cs	Reports CS concentration calculated with low range coefficients	B-12
low cs coef	Reports/sets low range CS coefficient	B-31
low h2s	Reports H_2S concentration calculated with low range coefficients	B-12
low h2s coef	Reports/sets low range H_2S coefficient	B-31
low range	Reports/sets current low range	B-35
low range cs	Reports/sets current CS low range	B-35
low range h2s	Reports/sets current H_2S low range	B-35
low range so2	Reports/sets current SO_2 low range	B-35
low so2	Reports SO_2 concentration calculated with low range coefficients	B-12
low so2 coef	Reports/sets low range SO_2 coefficient	B-31
low sp conc	Reports/sets low span concentration	B-32
low sp conc cs	Reports/sets low span CS concentration	B-32
low sp conc h2s	Reports/sets low span H_2S concentration	B-32
low sp conc so2	Reports/sets low span SO_2 concentration	B-32
lr	Outputs long records in the format specified in the command	B-23
lrec	Outputs long records	B-23
lrec format	Reports/sets output format for long records (ASCII or binary)	B-24
lrec layout	Reports current layout of lrec data	B-25
lrec mem size	Reports maximum number of long records that can be stored	B-25
lrec per	Reports/sets long record logging period	B-26
malloc lrec	Reports/sets memory allocation for long records	B-26
malloc srec	Reports/sets memory allocation for short records	B-26
me (menu)	Simulates pressing menu pushbutton	B-33
meas mode	Reports/sets the active measurement mode (SO_2, CS or SO_2/CS)	B-38
mode	Reports operating mode in local, service, or remote	B-48
no of lrec	Reports/sets number of long records stored in memory	B-26

Command	Description	Page
no of srec	Reports/sets number of short records stored in memory	B-26
pc	Reports/sets pressure compensation on or off	B-39
perm gas temp	Reports current perm gas temperature	B-13
pmt	Sets PMT on or off	B-42
pmt status	Reports PMT on or off	B-42
pmt voltage	Reports current PMT voltage	B-13
power up mode	Reports/sets the power up mode as local or remote	B-49
pres	Reports current reaction chamber pressure	B-13
pres comp	Reports/sets pressure compensation on or off	B-39
program no	Reports analyzer program number	B-50
push	Simulates pressing a key on the front panel	B-33
range	Reports/sets the range	B-35
range cs	Reports/sets the CS range	B-35
range h2s	Reports/sets the H_2S range	B-35
range mode	Reports/sets current range mode	B-37
range so2	Reports/sets the SO_2 range	B-35
react temp	Reports current reaction chamber temperature	B-14
relay status	Reports/sets relay logic status to for the designated relay(s)	B-54
ri (right)	Simulates pressing right pushbutton	B-33
ru (run)	Simulates pressing run pushbutton	B-33
sample sample gas	Sets zero/span valves to sample mode	B-37
save	Stores parameters in FLASH	B-42
save params	Stores parameters in FLASH	B-42
sc (screen)	C-series legacy command that reports a generic response (Use iscreen instead)	B-34
so2	Reports current SO_2 concentration	B-12
so2 bkg	Reports/sets current SO_2 background	B-31
so2 coef	Reports/sets current SO_2 coefficient	B-30
sp conc	Reports/sets span concentration	B-32
sp conc cs	Reports/sets CS span concentration	B-32
sp conc h2s	Reports/sets H_2S span concentration	B-32
sp conc so2	Reports/sets SO_2 span concentration	B-32
sp field	Reports/sets item number and name in scratch pad list	B-28

Command	Description	Page
span span gas	Sets zero/span valves to span mode	B-37
span 1	Sets the dual span valves to the span 1 mode	B-38
span 2	Sets the dual span valves to the span 2 mode	B-38
sr	Reports last short record stored	B-22
srec	Reports maximum number of short records	B-23
srec format	Reports/sets output format for short records (ASCII or binary)	B-24
srec layout	Reports current layout of short record data	B-25
srec mem size	Reports maximum number of short records	B-25
srec per	Reports/sets short record logging period	B-26
stream per	Reports/sets current set time interval for streaming data	B-28
stream time	Reports/sets a time stamp to streaming data or not	B-29
tc	Sets temperature compensation on or off	B-44
temp comp	Reports/sets temperature compensation on or off	B-39
time	Reports/sets current time (24-hour time)	B-42
tz	Reports the "tz" timezone string for the NTP server	B-39
up	Simulates pressing up pushbutton	B-33
zero zero gas	Sets zero/span valves to zero mode	B-37

Measurements

avg time
high avg time
low avg time
These commands report the averaging time in seconds when operating in single range, or averaging time used with the high and low ranges when operating in dual or auto range mode. The example that follows shows that the averaging time is 300 seconds, according to **Table B–3**.

```
Send:          avg time
Receive:       avg time 11:300 sec
```

set avg time *selection*
set high avg time *selection*
set low avg time *selection*
These commands set the averaging time, high and low averaging times, according to **Table B–3**. The example that follows sets the low range averaging time to 120 seconds.

```
Send:          set low avg time 8
Receive:       set low avg time 8 ok
```

Table B–3. Averaging Times

Selection	Averaging Time (seconds)
0	1 seconds
1	2
2	5
3	10
4	20
5	30
6	60
7	90
8	120
9	180
10	240
11	300

so2
high so2
low so2
These commands report the measured SO_2 concentration when operating in single range, or high and low SO_2 when operating in dual or auto range mode. The example that follows shows that the SO_2 concentration is 40 ppm.

```
Send:          so2
Receive:       so2 4.000E+04 ppb
```

h2s
high h2s
low h2s
These commands report the measured H_2S concentration when operating in single range, or high and low H_2S when operating in dual or auto range mode. The example that follows shows that the H_2S concentration is 40 ppm.

```
Send:          h2s
Receive:       h2s 4.000E+04 ppb
```

cs
high cs
low cs
These commands report the measured CS concentration when operating in single range, or high and low CS when operating in dual or auto range mode. The example that follows shows that the CS concentration is 40 ppm.

```
Send:          cs
Receive:       cs 4.000E+04 ppb
```

conv temp
This command reports the current SO_2 converter temperature. The example that follows reports that the current converter temperature is 45 °C.

```
Send:          conv temp
Receive:       conv temp 45.0 deg C
```

flow
This command reports the current sample flow. The example that follows reports that the current sample flow is 0.503 liters/minute.

```
Send:          flow
Receive:       flow 0.503 l/m
```

internal temp

This command reports the current internal instrument temperature. The first reading is the temperature being used in instrument calculations. The second temperature is the actual temperature being measured. If temperature compensation is on, then both temperature readings are the same. If temperature compensation is off, a temperature of 30 °C is used as the default temperature even though the actual internal temperature is 27.2 °C. The example that follows shows that temperature compensation is on and that the internal temperature is 27.2 °C.

```
Send:         internal temp
Receive:      internal temp, 27.2 deg C, actual 27.2
```

perm gas temp

This command reports the current permeation gas temperature. The example that follows reports that the permeation gas temperature is 45 °C.

```
Send:         perm gas temp
Receive:      perm gas temp 45 deg C
```

pmt voltage

This command reports the current PMT voltage. The example that follows reports that the current PMT voltage is -510 volts.

```
Send:         pmt voltage
Receive:      pmt voltage -510 volts
```

pres

This command reports the current reaction chamber pressure. The first pressure reading is the pressure reading being used in instrument calculations. The second pressure is the actual pressure reading being measured. If pressure compensation is on, then both pressure readings are the same. If pressure compensation is off, a pressure of 760 mm Hg is used as default pressure even though the actual pressure is 753.4 mm Hg. The example that follows shows that the actual reaction chamber pressure is 753.4 mmHg.

```
Send:         pres
Receive:      pres 753.4 mm Hg, actual 753.4
```

react temp

This command reports the current reaction chamber temperature. The example that follows reports that the current reaction chamber temperature is 45.2 °C.

```
Send:         react temp
Receive:      react temp 45.2 deg C
```

flags

This reports 8 hexadecimal digits (or flags) that represent the status of the flash lamp, LED, pressure and temperature compensation status, gas units, gas mode, and alarms. To decode the flags, each hexadecimal digit is converted to binary as shown in **Figure B–1**. It is the binary digits that define the status of each parameter. In the example that follows, the instrument is reporting that the TEST led is OFF, the flash lamp is ON, and the SO_2 concentration alarm is inactive.

```
Send:         flags
Receive:      flags 40028000
```

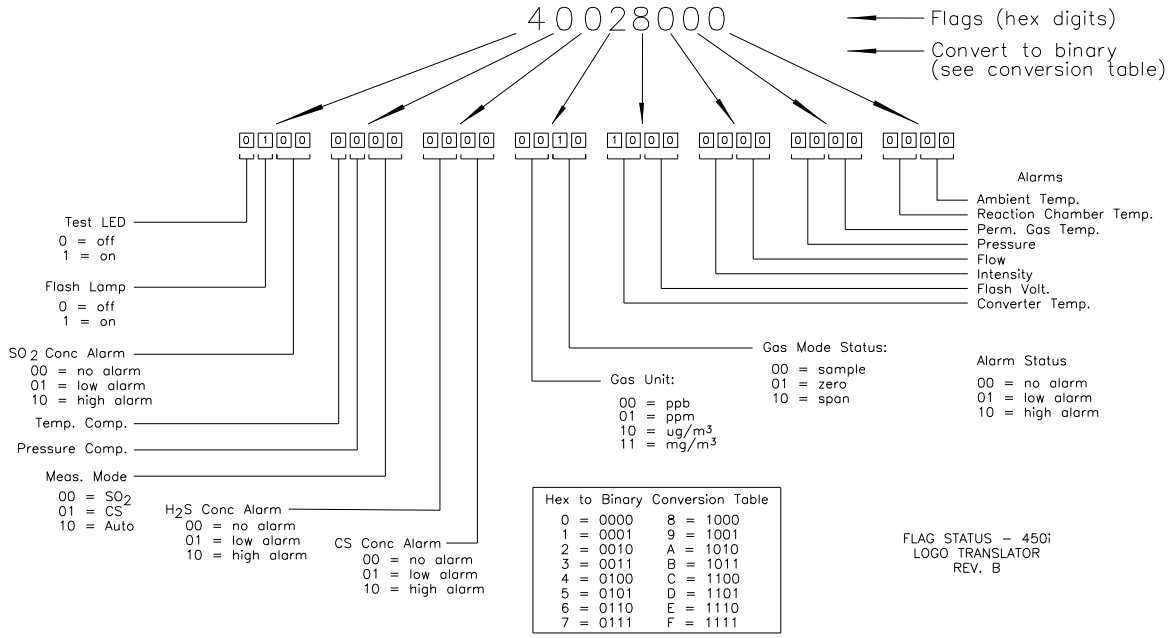

Figure B–1. Flags

Alarms

alarm chamber temp min
alarm chamber temp max
These commands report the chamber temperature alarm minimum and maximum value current settings. The example that follows reports that the chamber temperature alarm minimum value is 35.0 °C.

```
Send:         alarm chamber temp min
Receive:      alarm chamber temp min 35.0 deg C
```

set alarm chamber temp min *value*
set alarm chamber temp max *value*
These commands set the chamber temperature alarm minimum and maximum values to *value*, where *value* is a floating-point number representing chamber temperature alarm limits in degrees C. The example that follows sets the chamber temperature alarm maximum value to 55.0 °C.

```
Send:         set alarm chamber temp max 55.0
Receive:      set alarm chamber temp max 55.0 ok
```

alarm conc so2 min
alarm conc h2s min
alarm conc cs min
alarm conc so2 max
alarm conc h2s max
alarm conc cs max
These commands report the SO_2, H_2S, and CS concentration alarm minimum and maximum values current setting. The example that follows reports that the SO_2 concentration minimum is 5.2 ppb.

```
Send:         alarm conc so2 min
Receive:      alarm conc so2 min 5.200E+00 ppb
```

set alarm conc so2 min *value*
set alarm conc h2s min *value*
set alarm conc cs min *value*
set alarm conc so2 max *value*
set alarm conc h2s max *value*
set alarm conc cs max *value*
These commands set the SO_2, H_2S, and CS concentration alarm minimum and maximum values to *value,* where *value* is a floating-point representation of the concentration alarm limits. Values must be in the ppb

or µg/m^3. Refer to "Entering Units in PPB" in this chapter. The example that follows sets the SO_2 concentration alarm maximum value to 80 ppm.

```
Send:         set alarm conc so2 max 80000
Receive:      set alarm conc so2 max 80000 ok
```

---

alarm converter temp min
alarm converter temp max
These commands report the converter temperature alarm minimum and maximum value current settings. The example that follows reports that the converter temperature alarm minimum value is 205.0 °C.

```
Send:         alarm converter temp min
Receive:      alarm converter temp min 205.0 deg C
```

set alarm converter temp min *value*
set alarm converter temp max *value*
These commands set the converter temperature alarm minimum and maximum values to *value*, where *value* is a floating-point number representing converter temperature alarm limits in degrees C. The example that follows sets the converter temperature alarm maximum value to 215.0 °C.

```
Send:         set alarm converter temp max 215
Receive:      set alarm converter temp max 215 ok
```

---

alarm internal temp min
alarm internal temp max
These commands report the internal temperature alarm minimum and maximum value current settings. The example that follows reports that the internal temperature alarm minimum value is 15.0 °C.

```
Send:         alarm internal temp min
Receive:      alarm internal temp min 15.0 deg C
```

set alarm internal temp min *value*
set alarm internal temp max *value*
These commands set the internal temperature alarm minimum and maximum values to *value*, where *value* is a floating-point number representing internal temperature alarm limits in degrees C. The example that follows sets the internal temperature alarm maximum value to 45.0 °C.

```
Send:         set alarm internal temp max 45
Receive:      set alarm internal temp max 45 ok
```

alarm lamp intensity min
alarm lamp intensity max
These commands report the alarm lamp intensity minimum and maximum value current settings. The example that follows reports that the alarm alarm lamp intensity minimum value is 40 percent.

```
Send:         alarm lamp intensity min
Receive:      alarm lamp intensity min 40 %
```

set alarm lamp intensity min *value*
set alarm lamp intensity max *value*
These commands set the alarm lamp intensity minimum and maximum values to *value,* where *value* is a floating-point number representing alarm lamp intensity limits in percent. The example that follows sets the alarm lamp intensity maximum value to 100 percent.

```
Send:         set lamp intensity max 100
Receive:      set lamp intensity max 100 ok
```

alarm lamp voltage min
alarm lamp voltage max
These commands report the alarm lamp voltage minimum and maximum value current settings. The example that follows reports that the alarm lamp voltage value is 3.2 volts.

```
Send:         alarm lamp voltage min
Receive:      alarm lamp voltage min 3.2 V
```

set alarm lamp voltage min *value*
set alarm lamp voltage max *value*
These commands set the alarm lamp voltage minimum and maximum values to *value,* where *value* is a floating-point number representing alarm lamp voltage limits in volts. The example that follows sets the alarm lamp voltage maximum value to 4.5 volts.

```
Send:         set lamp voltage max 4.5
Receive:      set lamp voltage max 4.5 ok
```

alarm pgas temp min
alarm pgas temp max
These commands report the alarm perm gas temperature minimum and maximum value current settings. The example that follows reports that the alarm perm gas temperature minimum value is 25.2 °C.

```
Send:         alarm pgas temp min
Receive:      alarm pgas temp min 25.2 deg C
```

set alarm pgas temp min *value*
set alarm pgas temp max *value*
These commands set the alarm perm gas temperature minimum and maximum values to *value,* where *value* is a floating-point number representing alarm perm gas temperature limits in degrees C. The example that follows sets the alarm perm gas temperature maximum value to 42 °C.

```
Send:         set alarm pgas temp max 42.0
Receive:      set alarm pgas temp max 42.0 ok
```

alarm pressure min
alarm pressure max
These commands report the alarm pressure minimum and maximum value current settings. The example that follows reports that the alarm pressure minimum value is 205 mmHg.

```
Send:         alarm pressure min
Receive:      alarm pressure min 205 mmHg
```

set alarm pressure min *value*
set alarm pressure max *value*
These commands set the alarm pressure minimum and maximum values to *value,* where *value* is a floating-point number representing alarm pressure limits in millimeters of mercury. The example that follows sets the alarm pressure maximum value to 215 mmHg.

```
Send:         set alarm pressure max 215
Receive:      set alarm pressure max 215 ok
```

alarm sample flow min
alarm sample flow max
These commands report the sample flow alarm minimum and maximum value current settings. The example that follows reports that the sample flow alarm minimum value is 2 LPM.

```
Send:         alarm sample flow min
Receive:      alarm sample flow min 2.000 l/min
```

Note The response is formatted to be three digits to the right of the decimal instead of one digit to the right of the decimal. ▲

set alarm sample flow min *value*
set alarm sample flow max *value*
These commands set the sample flow alarm minimum and maximum values to *value,* where *value* is a floating-point number representing sample flow alarm limits in liters per minute. The example that follows sets the sample flow alarm maximum value to 1 LPM.

```
Send:         set alarm sample flow max 1
Receive:      set alarm sample flow max 1 ok
```

alarm trig conc so2
alarm trig conc h2s
alarm trig conc cs
This command reports the SO_2, H2s, and CS concentration alarm trigger action for minimum alarm, current setting, to either floor or ceiling. The example that follows shows the SO_2 concentration minimum alarm trigger set to ceiling, according to **Table B–4**.

```
Send:         alarm trig conc so2
Receive:      alarm trig conc so2 1
```

These commands set the SO_2, H2s, and CS concentration alarm minimum *value,* where *value* is set to either floor or ceiling, according to **Table B–4**. The example that follows sets the SO_2 concentration minimum alarm trigger to ceiling.

```
Send:         set alarm trig conc so2 1
Receive:      set alarm trig conc so2 1 ok
```

Table B–4. Alarm Trigger Values

Value	Alarm Trigger
00	Floor
01	Ceiling

Diagnostics

agc int

This command reports the current of the reference channel AGC circuit. The example that follows reports that the current AGC intensity is 90 percent.

```
Send:          agc int
Receive:       agc int 90 %
```

diag volt mb

This command reports the diagnostic voltage measurements on the motherboard. The sequence of voltages is: Positive 24, positive 15, positive 5, positive 3.3, and negative 3.3. Each voltage value is separated by a space.

```
Send:          diag volt mb
Receive:       diag volt mb 24.1 14.9 4.9 3.2 -3.2
```

diag volt mib

This command reports the diagnostic voltage measurements on the measurement interface board. The sequence of voltages is: Positive 24, positive 15, negative 15, positive 5, and positive 3.3. Each voltage value is separated by a space.

```
Send:          diag volt mib
Receive:       diag volt mib 24.1 14.9 -14.9 4.9 3.2
```

diag volt iob

This command reports the diagnostic voltage measurements on the I/O expansion board. The sequence of voltages is: Positive 24, positive 5, positive 3.3, and negative 3.3. Each voltage value is separated by a space.

```
Send:          diag volt iob
Receive:       diag volt iob 24.1 4.9 3.2 -3.2
```

lamp setpoint

This command reports the set lamp setpoint. The example that follows reports the lamp setpoint is 1000 counts.

```
Send:         lamp setpoint
Receive:      lamp setpoint 1000 counts
```

set lamp setpoint *value*
value = 0 < *value* < 4095

These commands set the lamp setpoint in counts. The example that follows sets the lamp setpoint to 100 counts.

```
Send:         set lamp setpoint 100
Receive:      set lamp setpoint 100 ok
```

---

lamp int
This command reports the current flash lamp intensity. The example that follows reports that the current flash lamp intensity is 3867 Hz.

```
Send:         lamp int
Receive:      lamp int 3867 Hz
```

---

lamp voltage
This command reports the current flash lamp voltage. The example that follows reports that the current flash lamp voltage is -810 volts.

```
Send:         lamp voltage
Receive:      lamp voltage -810 V
```

---

led status
led
These commands report the status of the optical test LED on or off. The example that follows reports that the optical test LED is on.

```
Send:         lamp status
Receive:      lamp status on
```

set led *onoff*
These commands set the optical test LED *on* or *off*. The example that follows turns the optical test LED off.

```
Send:         set lamp off
Receive:      set lamp off ok
```

Datalogging

---

clr records
This command will clear all long and short records that have been saved.

```
Send:         clr records
Receive:      clr records ok
```

set clr lrecs
set clr srecs
These commands will clear only the long records or only the short records that have been saved. The example that follows clears short records.

```
Send:         set clr srecs
Receive:      set clr srecs ok
```

---

list din
list dout
These commands report the current selection for the digital outputs in the format. Output no Index number variable name active state. The active state for digital outputs is open or closed. The active state for digital inputs is high or low.

```
Send:         list dout
Receive:      list dout
              output index variable state
              1 28 CONC ALARM closed
              3 4 UNITS closed
              4 10 GEN ALARM open
```

---

list lrec
list srec
list stream
list sp
These commands report the list of current selections for long record logging data, short record logging data, streaming data output, or the scratch pad (sp) list.

The scratch pad is a temporary memory area which is used to set up lists of selections for lrec, srec, or streaming data items. The user can copy any of these lists to the scratch pad, modify individual elements in the list, then save the scratch pad back to the original list. Refer to the "sp field" command for information on how to edit the scratch pad.

The example that follows shows the list for streaming data output.

```
Send:         list stream
Receive:      list stream
              field index variable
              x x time
              1 1 so2
              2 18 pmtv
```

---

er *xy*
lr *xy*
sr *xy*
x = | 0 | 1 | : Reply termination format (see "set format *format*" command)
y = | 0 | 1 | 2 | : Output format (see "set erec/lrec/srec format *format*" command)

These commands report the last long or short records stored and dynamic data. In the example that follows, the command requests a long record with no checksum, in ASCII format with text. For details on how to decode the flag fields within these records, see the "flags" command.

```
Send:         lr01
Receive:      lr01
          18:09 05-12-03 flags 5c000044 SO2 9658E-5 low SO2 8920E-5
          Intt 28.6 Rctt 25.6 Pgast 0.00 Pres 720.3 Smpfl 0.489 PMt V
          -808 LmpV 449 Lmpi 4740E+1
```

---

erec
This command returns a snapshot of the main operating conditions (measurements and status) at the time the command is issued. The example that follows shows a typical response.

The format is defined by the current settings of the "format" and "erec format" commands. For details on erec formatting, see the "Record Layout Definition" section at the end of this appendix. For details on how to decode the flag fields within these records, see the "flags" command.

```
Send:         erec
Receive:      erec
         09:45 04-07-05 flags 5C040000 so2 0.001  4 loso2 0.001  4
         pmtv 595.331 FlshV 797.227 Intt 29.263 Rctt 44.938 PGast
         0.000 Smpfl 0.440 Pres 715.478 avgt 10 lo avgt 10 SO2bkg
         6.795 SO2 coef 1.000 lo SO2 coef 1.000 SO2range 10000.000 lo
         SO2range 10000.000 Lmpi 92.000
```

---

lrec
srec
lrec *xxxx yy*
srec *xxxx yy*
lrec *aa:bb oo-pp-qq yy*
srec *aa:bb oo-pp-qq yy*
xxxx = the number of past records
yy = the number of records to return (1 to 10)

aa = hours (01 to 24)
bb = minutes (01 to 59)
oo = month (01 to 12)
pp = day (01 to 31)
qq = year

These commands output long or short records. The output format is determined by the "set lrec format" and "set srec format" commands. The logging time is determined by the "set lrec per" and "set srec per" commands.

In the following example, there are 740 long records currently stored in memory. When the command lrec 100 5 is sent, the instrument counts back 100 records from the last record collected (record 740), and then returns 5 records: 640, 641, 642, 643, and 644. For details on how to decode the flag fields within these records, see the "flags" command.

```
Send:         lrec 5
Receive:      lrec 100 5
          18:09 05-12-03 flags 5c000044 SO2 9658E-5 low SO2 8920E-5
          Intt 28.6 Rctt 25.6 Pgast 0.00 Pres 720.3 Smpfl 0.489 PMt V
          -808 LmpV 449 Lmpi 4740E+1
          18:10 05-12-03 flags 5c000044 SO2 6923E-5 low SO2 6429E-5
          Intt 28.6 Rctt 25.6 Pgast 0.00 Pres 720.3 Smpfl 0.489 PMt V
          -808 LmpV 449 Lmpi 4740E+1
          18:11 05-12-03 flags 5c000044 SO2 8814E-5 low SO2 9488E-5
          Intt 28.6 Rctt 25.6 Pgast 0.00 Pres 720.3 Smpfl 0.489 PMt V
          -808 LmpV 449 Lmpi 4740E+1
          18:12 05-12-03 flags 5c000044 SO2 7313E-5 low SO2 6997E-5
          Intt 28.6 Rctt 25.6 Pgast 0.00 Pres 720.3 Smpfl 0.489 PMt V
          -808 LmpV 449 Lmpi 4740E+1
          18:13 05-12-03 flags 5c000044 SO2 8168E-5 low SO2 8237E-5
          Intt 28.6 Rctt 25.6 Pgast 0.00 Pres 720.3 Smpfl 0.489 PMt V
          -808 LmpV 449 Lmpi 4740E+1
```

---

erec format
lrec format
srec format

These commands report the output format for long and short records, and dynamic data in various formats such as ASCII without text, ASCII with text, or binary. The example that follows shows the output format for long records is ASCII with text, according to **Table B–5**.

```
Send:         lrec format
Receive:      lrec format 01
```

set erec format *format*
set lrec format *format*
set srec format *format*
These commands set the output format for long and short records, and dynamic data, according to **Table B–5**. The example that follows sets the long record output format to ASCII with text.

```
Send:         set lrec format 1
Receive:      set lrec format 1 ok
```

Table B–5. Record Output Formats

Format	Output Format
0	ASCII no text
1	ASCII with text
2	binary data

erec layout
lrec layout
srec layout
These commands reports the layout (string indicating the data formats) for data that is sent out in response to the erec, lrec, srec, and related commands The example that follows shows a typical response. For details on how to interpret the strings, see "Record Layout Definition" later in this appendix.

```
Send:         lrec layout
Receive:      lrec layout %s %s %lx %f %f %f %f %f %f
              t D L ffffff
              so2 pmtv lmpv ain4 ain5 lmpi
```

lrec mem size
srec mem size

These commands report the number of lrecs and srecs that can be stored with the current settings and the number of blocks reserved for lrecs and srecs. The example that follows shows that 1075 blocks were reserved for lrecs and the maximum number of lrecs that can be stored in memory is 241979. Memory allocation can be changed using the malloc command.

```
Send:         lrec mem size
Receive:      lrec mem size 241979 recs, 1075 blocks
```

lrec per
srec per
These commands report the long and short records logging period. The example that follows shows that the short record logging period is 5 minutes.

```
Send:         srec per
Receive:      srec per 5 min
```

set srec per *value*
set srec per *value*
value = | 1 | 5 | 15 | 30 | 60 |

These commands set the long and short records logging period to *value* in minutes. The example that follows sets the long record logging period to 15 minutes.

```
Send:         set lrec per 15
Receive:      set lrec per 15 ok
```

no of lrec
no of srec
These commands report the number of long and short records stored in the long and short records memory. The example that follows shows that 50 long records have been stored in the memory.

```
Send:         no of lrec
Receive:      no of lrec 50 recs
```

malloc lrec
malloc srec
These commands report the currently set memory allocation for long and short records in percent of total memory.

```
Send:         malloc lrec
Receive:      malloc lrec 10%
```

set malloc lrec *value*
set malloc srec *value*
value = 0 to 100

These commands set the percent of memory space allocated for long and short records to *value*, where *value* is a floating-point number representing

percent. The example that follows sets the memory allocation for long records to 10.

Note Issuing these commands will clear all the logging data memory. All the existing records should be retrieved using appropriate commands, if required. ▲

```
Send:         set malloc lrec 10
Receive:      set malloc lrec 10 ok
```

---

data treatment lrec
data treatment srec
These commands report the current selection of data treatment for concentrations in the long records (lrecs) or short records (srecs). The example that follows reports the data treatment for concentrations in lrec is minimum.

```
Send:         data treatment lrec
Receive:      data treatment lrec min
```

set data treatment lrec *string*
set data treatment srec *string*
string = | cur | avg | min | max |
These commands set the data treatment to *string*, where *string* is current, average, minimum, or maximum for the concentration values recorded in the long records (lrecs) or short records (srecs). The example that follows sets the data treatment for concentrations in lrec to minimum.

```
Send:         set data treatment lrec min
Receive:      set data treatment lrec min ok
```

---

set copy sp to lrec
set copy sp to srec
set copy sp to stream
These commands copy the current selections in scratch pad (sp) into the long record, short record, or streaming data list.

The scratch pad is a temporary memory area which is used to set up lists of selections for lrec, srec, or streaming data items. The user can copy any of these lists to the scratch pad, modify individual elements in the list, then save the scratch pad back to the original list. Refer to the “sp field” command for information on how to edit the scratch pad.

The example that follows copies the current list in scratch pad into the long records list.

```
Send:         set copy sp to lrec
Receive:      set copy sp to lrec ok
```

---

set copy lrec to sp
set copy srec to sp
set copy stream to sp
These commands copy the current contents of the long record, short record, or streaming data list into the scratch pad (sp). These commands are useful in easy modification of current long record, short record, or streaming data lists.

The scratch pad is a temporary memory area which is used to set up lists of selections for lrec, srec, or streaming data items. The user can copy any of these lists to the scratch pad, modify individual elements in the list, then save the scratch pad back to the original list. Refer to the "sp field" command for information on how to edit the scratch pad.

The example that follows copies the current list of long records into the scratch pad.

```
Send:         set copy lrec to sp
Receive:      set copy lrec to sp ok
```

---

sp field *number*
This command reports the variable *number* and name stored at index in the scratch pad list.

The scratch pad is a temporary memory area which is used to set up lists of selections for lrec, srec, or streaming data items. The user can copy any of these lists to the scratch pad, modify individual elements in the list, then save the scratch pad back to the original list.

The example that follows shows that the field 1 in the scratch pad is set to index number 3, which is for the variable SO_2 concentration.

```
Send:         sp field 1
Receive:      sp field 1 1 so2
```

set sp field *number value*
number = 1-32 is the maximum number of fields in long and short record lists.
number = 1-18 is for streaming data lists.

This command sets the scratch pad field *number* (item number in scratch pad list) to *value*, where v*alue* is the index number of a variable in the analog out variable list. Available variables and their corresponding index

numbers may be obtained using the command “list var aout”. The “set sp field” command is used to create a list of variables which can then be transferred into the long record, short record, or streaming data lists, using the “set copy sp to lrec”, “set copy sp to srec”, or “set copy sp to stream” commands.

```
Send:         set sp field 1 1
Receive:      set sp field 1 1 ok
```

---

stream per
This command reports the currently set time interval in seconds for streaming data.

```
Send:         stream per
Receive:      stream per 10
```

set stream per *number value*
number value = | 1 | 2 | 5 | 10 | 20 | 30 | 60 | 90 |120 | 180 | 240 | 300 |

This command sets the time interval between two consecutive streaming data strings to *number value* in seconds. The example that follows sets the number value to 10 seconds.

```
Send:         set stream per 10
Receive:      set stream per 10 ok
```

---

stream time
This command reports if the streaming data string will have a time stamp attached to it or not, according to **Table B–6**.

```
Send:         stream time
Receive:      stream time 0
```

set stream time *value*
This command enables *value,* where *value* is to attach or disable time stamp to streaming data string, according to **Table B–6**. The example that follows attaches a time stamp to streaming data.

```
Send:         set stream time 0
Receive:      set stream time 0 ok
```

Table B–6. Stream Time Values

Value	**Stream Time**
00	Attaches time stamp to streaming data string
01	Disables time stamp to streaming data string

Calibration

set cal so2 coef
set cal h2s coef
set cal cs coef
set cal high so2 coef
set cal high h2s coef
set cal high cs coef
set cal low so2 coef
set cal low h2s coef
set cal low cs coef

These commands will auto-calibrate SO_2, H_2S, and CS coefficients based on SO_2, H_2S, and CS span gas concentrations. The high and low commands are only available in dual and auto range mode. If the mode is incorrect, the instrument responds with "can't, wrong settings". The example that follows shows a successful auto-calibration of the low SO_2 coefficient.

```
Send:         set cal low so2 coef
Receive:      set cal low so2 coef ok
```

set cal cs bkg

This command will auto-calibrate the CS background. The example that follows shows a successful auto-calibration of the CS background.

```
Send:         set cal cs bkg
Receive:      set cal cs bkg ok
```

set cal so2 bkg

This command will auto-calibrate the SO_2 background. The example that follows shows a successful auto-calibration of the SO_2 background.

```
Send:         set cal so2 bkg
Receive:      set cal so2 bkg ok
```

so2 coef
h2s coef
cs coef
coef so2
coef h2s

coef cs
high so2 coef
high h2s coef
high cs coef
low so2 coef
low h2s coef
low cs coef
These commands report SO_2, H_2S, and CS coefficients in single range mode, or the high and low range coefficients in dual or auto range mode. If the mode is incorrect, the instrument responds with "can't, wrong settings". The example that follows reports that the SO_2 coefficient is 1.200.

```
Send:         so2 coef
Receive:      so2 coef 1.200
```

set so2 coef *value*
set coef so2 *value*
set high so2 coef *value*
set low so2 coef *value*
These commands set the SO_2, H_2S, and CS coefficients to user-defined values to *value*, where *value* is a floating-point representation of the coefficient. The example that follows sets the SO_2 coefficient to 1.200.

```
Send:         set so2 coef 1.200
Receive:      set so2 coef 1.200 ok
```

---

so2 bkg
cs bkg
This command reports the current SO_2 and CS backgrounds. The example that follows reports that the SO_2 background is 21.4 ppb.

```
Send:         so2 bkg
Receive:      so2 bkg 21.4 ppb
```

set so2 bkg *value*
This command is used to set SO_2 and CS backgrounds to user-defined values to *value*, where *value* is a floating-point representation of the background in current selected units. The example that follows sets the SO_2 background to 21.4 ppb.

```
Send:         set so2 bkg 21.4
Receive:      set so2 bkg 21.4 ok
```

sp conc
sp conc cs
sp conc h2s
sp conc so2
high sp conc
high sp conc cs
high sp conc h2s
high sp conc so2
low sp conc
low sp conc cs
low sp conc h2s
low sp conc so2

These commands report span concentration in single range mode, or the high and low span concentrations in dual or auto range mode. If the mode is incorrect, the instrument responds with "can't, wrong settings". The example that follows reports the span gas concentration in single range mode.

```
Send:          sp conc
Receive:       sp conc 1000
```

set sp conc *value*
set sp conc cs *value*
set sp conc h2s *value*
set sp conc so2 *value*
set high sp conc *value*
set high sp conc cs *value*
set high sp conc h2s *value*
set high sp conc so2 *value*
set low sp conc *value*
set low sp conc cs *value*
set low sp conc h2s *value*
set low sp conc so2 *value*

These commands set the span concentrations to user-defined values to *value*, where *value* is a floating-point representation of the span concentration in current selected units. The example that follows sets the span concentration to 80 ppm in the single range mode.

```
Send:          set sp conc 80000
Receive:       set sp conc 80000 ok
```

set cal perm gas offset res *res*

This command calibrates the permeation gas temperature sensor offset using a calibrating resistor of value *res* in ohms.

```
Send:         set cal perm gas offset res 5000
Receive:      set cal perm gas offset res 5000 ok
```

---

set cal perm gas offset temp *temp*

This command calibrates the permeation gas temperature sensor offset to a temperature of *temp* in degrees C.

```
Send:         set cal perm gas offset temp 34.5
Receive:      set cal perm gas offset temp 34.5 ok
```

---

set cal perm oven offset res *res*

This command calibrates the permeation oven temperature sensor offset using a calibrating resistor of value *res* in ohms.

```
Send:         set cal perm oven offset res 5000
Receive:      set cal perm oven offset res 5000 ok
```

Keys/Display

---

push *button*

button = | do | down | en | enter | he | help | le | left | me | menu | ri | right | ru | run | up | 1 | 2 | 3 | 4 |

These commands simulates pressing the front panel pushbuttons. The numbers represent the front-panel soft keys, from left to right.

```
Send:         push enter
Receive:      push enter ok
```

---

isc

iscreen

This command retrieves the frame buffer data used for the display on the *i*Series instrument. It is 19200 bytes in size, 2-bits per pixel, 4 pixels per byte arranged as 320 by 240 characters. The data is sent in RLE encoded form to save time in transmission. It is sent as a type '5' binary c_link response with no checksum.

The RLE encoding consists of a 0 followed by an 8-bit count of consecutive 0xFF bytes. The following 'c' code will expand the incoming data.

```
void      unpackDisplay ( void far* tdib, unsigned char far* rlescreen )
{
int i,j,k;
unsigned char far *sc4bpp, *sc2bpp, *screen, *ptr;

   ptr = screen = (unsigned char far *)malloc(19200);
   //RLE decode the screen
```

```
    for (i=0; i<19200 && (ptr - screen) < 19200; i++)
    {
       *(ptr++) = *(rlescreen + i);
       if (*(rlescreen + i) == 0)
       {
          unsigned char rlecount = *(unsigned char *)(rlescreen + ++i);

          while (rlecount)
          {
             *(ptr++) = 0;
             rlecount--;
          }
       }
       else if (*(rlescreen + i) == 0xff)
       {
          unsigned char rlecount = *(unsigned char *)(rlescreen + ++i);

          while (rlecount)
          {
             *(ptr++) = 0xff;
             rlecount--;
          }
       }
    }
}
```

To convert this data into a BMP for use with windows, it needs to be turned into a 4BPP as that is the smallest windows can display. Also note that BMP files are upside down relative to this data, i.e. the top display line is the last line in the BMP.

---

sc

screen

This command is meant for backward compatibility on the C series. Screen information is reported using the “iScreen” command above.

```
Send:         screen
Receive:      screen
              This is an I series
              Instrument. Screen
              Information not
              Available
```

Measurement Configuration

range so2 (or **range)**
range h2s
range cs
high range so2 (or **high range)**
high range h2s
high range cs
low range so2 (or **low range)**
low range h2s
low range cs
These commands report and set the SO_2, H_2S, and CS range in single range mode, or the high and low ranges in dual or auto range mode. If the mode is incorrect, the instrument responds with "can't, wrong settings". The example that follows reports that the SO_2 full-scale range to 5.0 ppm, according to **Table B–7** and **Table B–8**.

```
Send:          range
Receive:       range 6: 5.000E+3 ppm
```

set range so2 (or **range)** *Selection*
set range h2s *Selection*
set range cs *Selection*
set high range so2 (or **high range)** *Selection*
set high range h2s *Selection*
set high range cs *Selection*
set low range so2 (or **low range)** *Selection*
set low range h2s *Selection*
set low range cs *Selection*
These commands select the SO_2 full-scale ranges, according to **Table B–7** and **Table B–8**. The example that follows sets the SO_2 full-scale range to 100 ppm.

```
Send:          set range 3
Receive:       set range 3 ok
```

Table B–7. Standard Ranges

Selection	ppm	mg/m³
0	0.05	0.2
1	0.1	0.5
2	0.2	1
3	0.5	2
4	1	5

Selection	ppm	mg/m³
5	2	10
6	5	20
7	10	25
8	C1	C1
9	C2	C2
10	C3	C3

Table B–8. Extended Ranges

Selection	ppm	mg/m³
0	0.5	2
1	1	5
2	2	10
3	5	20
4	10	50
5	20	100
6	50	200
7	100	250
8	C1	C1
9	C2	C2
10	C3	C3

custom *range*
range = | 1 | 2 | 3 |
This command reports the user-defined value of custom *range* 1, 2, or 3. The example that follows reports that custom range 1 is defined to 5.5 ppm.

```
Send:          custom 1
Receive:       custom 1 5.500E+3 ppb
```

set custom *range* **range** *value*
set custom 1 range *value*
set custom 2 range *value*
set custom 3 range *value*
These commands are used to set the maximum concentration for any of the three custom *ranges* 1, 2, or 3 to range *value*, where *value* is a floating-point

number representing concentration in ppm or mg/m^3. The example that follows sets the custom 1 range to 55.5 ppm.

```
Send:         set custom 1 range 55500
Receive:      set custom 1 range 55500 ok
```

---

range mode
This command reports the current range mode.

```
Send:         range mode
Receive:      range mode single
```

set range mode *mode*
This command sets the current range mode to single, dual, or auto. The example that follows sets the range mode to single.

```
Send:         set range mode single
Receive:      set range mode single ok
```

---

gas mode
This command reports the current mode of sample, zero, or span. The example that follows reports that the gas mode is sample.

```
Send:         gas mode
Receive:      gas mode sample
```

---

set sample
set sample gas
This command sets the zero/span or dual span valves to the sample mode. The example that follows sets the instrument to sample mode, that is, the instrument is reading the sample gas.

```
Send:         set sample
Receive:      set sample ok
```

---

set zero
set zero gas
This command sets the zero/span or dual span valves to the zero mode. The example that follows sets the instrument to zero mode that is, the instrument is reading the sample gas.

```
Send:         set zero
Receive:      set zero ok
```

set span
set span gas
This command sets the zero/span valves to the span mode. The example that follows sets the instrument to span mode that is, the instrument is sampling span gas.

```
Send:         set span
Receive:      set span ok
```

set span 1
set span 2
This command sets the dual span valves to the span 1 or span 2 modes. The example that follows sets the instrument to span 1 mode that is, the instrument is sampling span 1 gas.

```
Send:         set span 1
Receive:      set span 1 ok
```

gas unit
This command reports the current gas units (ppb, ppm, µg/m^3, or mg/m^3). The example reports that the gas unit is set to ppm.

```
Send:         gas unit
Receive:      gas unit ppm
```

set gas unit *unit*
unit = | ppb | ppm | µg/m^3 | mg/m^3 |
This command sets the gas units to ppb, ppm, µg/m^3, or mg/m^3. The example that follows sets the gas units to mg/m^3.

```
Send:         set gas unit mg/m3
Receive:      set gas unit mg/m3 ok
```

set gu *d*
d = | 0 (ppb) | 1 (ppm) | 2 (µg/m^3) | 3 (mg/m^3) |
This command sets the gas units to ppb, ppm, µg/m^3, or mg/m^3. The example that follows sets the gas units to µg/m^3.

```
Send:         set gu 2
Receive:      set gu 2 ok
```

meas mode
This command reports the active measurement mode (SO_2, CS, or SO_2/CS). The example below reports that the instrument is operating in SO_2 mode.

```
Send:          meas mode
Receive:       meas mode so2
```

set meas mode *mode*
mode = | so2 | cs | or | so2/cs |
This command sets the gas instrument the SO_2 mode, CS mode, or SO_2/CS mode. The example below sets the instrument to the SO_2 mode.

```
Send:          set meas mode so2
Receive:       set meas mode so2 ok
```

---

pres comp
This command reports whether pressure compensation is on or off. The example that follows shows that pressure compensation is on.

```
Send:          pres comp
Receive:       pres comp on
```

set pres comp *onoff*
set pc *d*
d = | 0 (off) | 1 (on) |
These commands turn the pressure compensation *on* or *off*. The example that follows turns pressure compensation off.

```
Send:          set pres comp off
Receive:       set pres comp off ok
```

---

temp comp
This command reports whether temperature compensation is on or off. The example that follows shows the temperature compensation is off.

```
Send:          temp comp
Receive:       temp comp off
```

set temp comp *onoff*
set tc *d*
d = | 0 (off) | 1 (on) |
These commands turn the temperature compensation *on* or *off*. The example that follows turns temperature compensation off.

```
Send:          set temp comp off
Receive:       set temp comp off ok
```

Hardware Configuration

contrast
This command reports the screen's level of contrast. The example that follows shows the screen contrast is 50%, according to **Error! Reference source not found.**.

```
Send:          contrast
Receive:       contrast 10:50%
```

set contrast *level*
This command sets the screen's *level* of contrast, according to **Error! Reference source not found.**. The example that follows sets the contrast level to 50%.

```
Send:          set contrast 10
Receive:       set contrast 10 ok
```

Table B-8. Contrast Levels

Level	Contrast Level
0	0%
1	5%
2	10%
3	15%
4	20%
5	25%
6	30%
7	35%
8	40%
9	45%
10	50%
11	55%
12	60%
13	65%
14	70%
15	75%
16	80%
17	85%
18	90%
19	95%

Level	Contrast Level
20	100%

conv set temp
This command reports the temperature that the SO_2 converter is set to. The example that follows reports that the converter temperature is set to 50.1 °C.

```
Send:         conv set temp
Receive:      conv set temp 50.1 deg C
```

set conv set temp *value*
This command sets the temperature that the SO_2 converter is set to *value*, where *value* is an integer representing degrees C. The example that follows sets the converter temperature to 50.1 °C.

```
Send:         set conv set temp 50.1
Receive:      set conv set temp 50.1 ok
```

date
This command reports the current date. The example that follows reports the date as December 1, 2004.

```
Send:         date
Receive:      date 12-01-04
```

set date *mm-dd-yy*
mm = month
dd = day
yy = year

This command sets the date of the analyzer's internal clock. The example that follows sets the date to December 1, 2004.

```
Send:         set date 12-01-04
Receive:      set date 12-01-04 ok
```

set default params
This command sets all the parameters to their default values. This does not affect the factory-calibrated parameters.

```
Send:         set default params
Receive:      set default params ok
```

lamp status
This command reports the status of the flash lamp on or off. The example that follows reports the flash lamp is on.

```
Send:         lamp status
Receive:      lamp status on
```

set lamp *onoff*
These commands set the flash lamp *on* or *off*. The example that follows turns the flash lamp off.

```
Send:         set lamp off
Receive:      set lamp off ok
```

set pmt *onoff*
These commands set the PMT *on* or *off*. The example that follows turns the PMT off.

```
Send:         set pmt off
Receive:      set pmt off ok
```

pmt status
This command reports the status of the PMT *on* or *off*. The example that follows reports that the PMT is on.

```
Send:         pmt status
Receive:      pmt status on
```

save
set save params
This command stores all current parameters in FLASH memory. It is important that each time instrument parameters are changed, that this command be sent. If changes are not saved, they will be lost in the event of a power failure. The example that follows saves the parameters to FLASH memory.

```
Send:         set save params
Receive:      set save params ok
```

time
This command reports the current time (24-hour time). The example that follows reports that the internal time is 2:15:30 pm.

```
Send:         time
Receive:      time 14:15:30
```

set time *hh:mm:ss*
hh = hours
mm = minutes
ss = seconds

This command sets the internal clock (24-hour time). The example that follows sets the internal time to 2:15 pm.

Note If seconds are omitted, the seconds default to 00. ▲

```
Send:          set time 14:15
Receive:       set time 14:15 ok
```

Communications Configuration

addr dns
This command reports the TCP/IP address for the domain name server.

```
Send:          addr dns
Receive:       addr dns 192.168.1.1
```

set addr dns *address*
This command sets the dns *address*, where *address* consists of four numbers ranging from 0-255 inclusive, separated by ".".

```
Send:          set addr dns 192.168.1.1
Receive:       set addr dns 192.168.1.1 ok
```

addr gw
This command reports the default TCP/IP gateway address.

```
Send:          addr gw
Receive:       addr gw 192.168.1.1
```

set addr gw *address*
This command sets the default gateway *address*, where *address* consists of four numbers ranging from 0-255 inclusive, separated by ".".

Note This command cannot be used when DHCP is on. Refer to the DHCP command that follows for additional information. ▲

```
Send:          set addr gw 192.168.1.1
Receive:       set addr gw 192.168.1.1 ok
```

addr ip
This command reports the IP address of the analyzer.

```
Send:         addr ip
Receive:      addr ip 192.168.1.200
```

set addr ip *address*
This command sets the analyzer's IP *address*, where *address* consists of four numbers ranging from 0-255 inclusive, separated by ".".

Note This command cannot be used when DHCP is on. Refer to the DHCP command that follows for additional information. ▲

```
Send:         set addr ip 192.168.1.200
Receive:      set addr ip 192.168.1.200 ok
```

addr nm
This command reports the IP netmask.

```
Send:         addr nm
Receive:      addr nm 255.255.255.0
```

set addr nm *address*
This command sets the nm *address*, where *address* consists of four numbers ranging from 0-255 inclusive, separated by ".".

Note This command cannot be used when DHCP is on. Refer to the DHCP command that follows for additional information. ▲

```
Send:         set addr nm 255.255.255.0
Receive:      set addr nm 255.255.255.0 ok
```

addr ntp
This command reports the IP address for the NTP time server. See "Network Time Protocol Server" in the "Communications Settings" section of the "Operation" chapter for more information.

```
Send:         addr ntp
Receive:      addr ntp 192.168.1.2
```

set addr ntp *address*
This command sets the NTP time server *address*, where *address* consists of four numbers ranging from 0-255 inclusive, separated by ".".

```
Send:         set addr ntp 192.168.1.2
Receive:      set addr ntp 192.168.1.2 ok
```

---

tz

This command reports the "tz" timezone string for the NTP server. See "Network Time Protocol Server" in the "Communications Settings" section of the "Operation" chapter for more information.

```
Send:         tz
Receive:      tz EST+5EDT
```

set tz *string*

This command sets the timezone *string* for the instrument for use with the NTP time server, where *string* is a standard timezone string. Common strings are listed in the timezone screen description in the "Operation" chapter.

```
Send:         set tz EST+5EDT
Receive:      set tz EST+5EDT ok
```

---

baud

This command reports the current baud rate for the serial port (RS232/RS485). The example that follows reports that the current baud rate is 9600 baud.

```
Send:         baud
Receive:      baud 9600
```

set baud *rate*

rate = | 1200 | 2400 | 4800 | 9600 | 19200 | 38400 | 57600 | 115200 |

This command sets the instrument baud *rate*. The example that follows sets the instrument's baud rate to 9600.

Note After the command is sent, the baud rate of the sending device must be changed to agree with the instrument. ▲

```
Send:         set baud 9600
Receive:      set baud 9600 ok
```

---

dhcp

This command enables (*on*) and disables (*off*) the DHCP service. When DHCP is set to on, the instrument gets the IP address, the netmask address, and the gateway address from a DHCP server. When DHCP is set to off, the instrument gets these addresses from system memory.

Note When changing the IP address, the netmask address, or the gateway address, you must cycle power to the instrument before the change takes effect. Until you cycle power, the address assigned by the DHCP server will still be used and reported as the current address. ▲

```
Send:         dhcp
Receive:      dhcp on
```

set dhcp *onoff*
This command enables (*on*) and disables (*off*) the DHCP service. When DHCP is set to on, the instrument gets the IP address, the netmask address, and the gateway address from a DHCP server. When DHCP is set to off, the instrument gets these addresses from system memory.

Note When changing the IP address, the netmask address, or the gateway address, you must cycle power to the instrument before the change takes effect. Until you cycle power, the address assigned by the DHCP server will still be used and reported as the current address. ▲

The example that follows sets the DHCP service on.

```
Send:         set dhcp on
Receive:      set dhcp on ok
```

---

format
This command reports the current reply termination format. The example that follows shows that the reply format is 00, which means reply with no checksum, according to **Table B–9**.

```
Send:         format
Receive:      format 00
```

set format *format*
This command sets the reply termination *format*, where *format* is set according to **Table B–9**. The example that follows sets the reply termination format to checksum.

```
Send:         set format 01
Receive:      set format 01 ok
```

Table B–9. Reply Termination Formats

Format	Reply Termination
00	<CR>
01	<NL> sum xxxx <CR>

where xxxx = 4 hexadecimal digits that represent the sum of all the characters (bytes) in the message

host name
This command reports the host name string.

```
Send:         host name
Receive:      host name analyzer01
```

set host name *string*
This command sets the host name *string*, where *string* is 1-13 alphanumeric characters.

```
Send:         set host name analyzer01
Receive:      set host name analyzer01 ok
```

instr name
This command reports the instrument name.

```
Send:         instr name
Receive:      instr name
              SO2 Analyzer
              SO2 Analyzer
```

instrument id
This command reports the instrument id.

```
Send:         instrument id
Receive:      instrument id 12
```

set instrument id *value*
This command sets the instrument id to *value,* where *value* is a decimal number between 0 and 127 inclusive.

Note Sending this command via RS-232 or RS-485 will require the host to use the new id for subsequent commands. ▲

```
Send:          set instrument id 12
Receive:       set instrument id 12 ok
```

---

mode

This command reports what operating mode the instrument is in: local, service, or remote. The example that follows shows that the instrument is in the remote mode.

```
Send:          mode
Receive:       mode remote
```

set mode local
set mode remote

These commands set the instrument to local or remote mode. The example that follows sets the instrument to the local mode.

```
Send:          set mode local
Receive:       set mode local ok
```

---

allow mode cmd

This command reports the current allow mode setting: 1 = allow "set mode local" or "set mode remote" commands; 0 = ignore "set mode local" or "set mode remote" commands. Refer to **Table B–10**. The default value is 0; ignore the commands (refer to the table that follows). The example that follows shows that the instrument is configured to ignore "set mode local" or "set mode remote" commands.

```
Send:          allow mode cmd
Receive:       allow mode cmd 0
```

set allow mode cmd *value*

This command is used to configure the instrument to *value,* where *value* is either 1 = accept or 0 = ignore the "set mode local" and "set mode remote" commands. Refer to the table that follows.

If the instrument is set to accept the commands (*value* = 1), the "set mode local" command will unlock the instrument and the keypad can be used to make changes via the front panel.

If the instrument is set to ignore the commands (*value* = 0), the instrument will respond with "ok" as if the command has been accepted and acted upon, **but will not change the instrument lock status** (this is for compatibility with systems expecting an "ok" response).

Note The instrument will always respond to the command "mode" with the status of the password lock as "mode local" or "mode remote" regardless of the above setting. ▲

The example that follows sets the instrument to accept the "set mode local" or "set mode remote" commands.

```
Send:          set allow mode cmd 1
Receive:       set allow mode cmd 1 ok
```

Table B–10. Allow Mode Command Values

Value	**Allow Mode Command**
0	Ignore (default)
1	Accept

power up mode
This command reports the current power up mode setting, where *value,* is either 0 = local/unlocked or 1 = remote/locked. The default value is 0; power up in local/unlocked mode. The example that follows shows that the instrument is configured to power up in the remote/locked mode.

```
Send:          power up mode
Receive:       power up mode 1
```

set power up mode *value*
This command is used to configure the instrument to power up in the local/unlocked mode (*value* = 0) or the remote/locked mode (*value* = 1). Refer to **Table B–11**.

If the instrument is set to power up in the local/unlocked mode, the keypad can be used to make changes via the front panel. If the instrument is set to power up in the remote/locked mode, changes can not be made from the front panel. The example that follows sets the instrument to power up in remote/locked mode.

```
Send:          set power up mode 1
Receive:       set power up mode 1 ok
```

Table B–11. Power Up Mode Command Values

Value	Power Up Mode Command
0	Local/Unlocked (default)
1	Remote/Locked Mode

program no
This command reports the analyzer's model information and program version number, which will be dependent on the current version.

```
Send:          program no
Receive:       program no iSeries 450i 01.01.10.003
```

set layout ack
This command disables the stale layout/layout change indicator (*) that is attached to each response if the erec layout has changed since the last time erec layout was requested. Refer to **Table B–12**.

The example that follows sets the instrument to.append the stale layout/layout change indicator (*).

```
Send:          set layout ack 1
Receive:       set layout ack 1 ok
```

Table B–12. Set Layout Ack Values

Value	Function
0	Do nothing (default)
1	Append "*"

I/O Configuration

analog iout range *channel*
This command reports the analog current output range setting for *channels*, where *channel* must be between 1 and 6, inclusive. The example that follows reports current output channel 4 to the 4-20 mA range, according to **Table B–13**. This command responds with "feature not enabled" if the I/O expansion board is not detected.

```
Send:          analog iout range 4
Receive:       analog iout range 4 2
```

set analog iout range *channel range*
This command sets analog current output *channel* to the *channel range* where *channel* is between 1 and 6 inclusive, and *range* is set according to **Table B–13**. The example that follows sets current output channel 4 to the 0-20 mA range. This command responds with "feature not enabled" if the I/O expansion board is not detected.

```
Send:         set analog iout range 4 1
Receive:      set analog iout range 4 1 ok
```

Table B–13. Analog Current Output Range Values

Range	Output Range
1	0-20 mA
2	4-20 mA
0 [cannot be set to this, but may report]	Undefined

analog vin *channel*
This command retrieves the analog voltage input *channel* data, both the calculated value and the actual voltage. In the example that follows, the "calculated" value of channel 1 is 75.325 degrees F, volts are 2.796. This command responds with "feature not enabled" if the I/O expansion board is not detected.

```
Send:         analog vin 1
Receive:      analog vin 1 75.325 2.796
```

analog vout range *channel*
This command reports the analog voltage output *channel* range, where *channel* is between 1 and 6 inclusive, according to Table B-11.

```
Send:         analog vout range 2
Receive:      analog vout range 2 3
```

set analog vout range *channel range*
This command sets analog voltage output *channel* to the range, where *channel* is between 1 and 6 inclusive, and *range* is set according to **Table B–14**. The example that follows sets channel 2 to the 0-10 V range.

```
Send:         set analog vout range 2 3
Receive:      set analog vout range 2 3 ok
```

Table B–14. Analog Voltage Output Range Values

Range	Output Range
1	0-1 V
2	0-100 mV
3	0-10 V
4	0-5 V
0 [cannot be set to this, but may report]	Undefined

dig in

This command reports the status of the digital inputs as a 4-digit hexadecimal string with the most significant bit (MSB) being input 16.

```
Send:          dig in
Receive:       dig in 0xff7f
```

din *channel*

This command reports the action assigned to input *channel* and the corresponding active state. The example that follows reports the input 1 to be assigned an index number 3 corresponding to action of SO_2 mode with the active state being high.

```
Send:          din 1
Receive:       din 1 3 SO2 MODE high
```

set din *channel index state*

This command assigns digital input *channel* (1-16) to activate the action indicated by *index* (1-35), when the input transitions to the designated *state* (high or low). Use “list din var” command to obtain the list of supported *index* values and corresponding actions.

```
Send:          set din 5 9 high
Receive:       set din 1 9 high ok
```

dout *channel*

This command reports the index number and output variable and the active state assigned to output *channel.* The example that follows reports the input 4 to be assigned an index number 11 corresponding to general alarm with the active state being open.

```
Send:          dout 4
Receive:       dout 4 11 GEN ALARM open
```

set dout *channel index state*
This command assigns digital output *channel* to be assigned to the action associated with *index*, and assigns it an active state of *state* (open or closed).

```
Send:          set dout 4 11 open
Receive:       set dout 4 11 open ok
```

---

dtoa *channel*
This reports the outputs of the 6 or 12 Digital to Analog converters, according to **Table B–15**. The example that follows shows that the D/A #1 is 97.7% full-scale.

```
Send:          dtoa 1
Receive:       dtoa 1 97.7%
```

Note All channel ranges are user definable. If any customization has been made to the analog output configuration, the default selections may not apply. ▲

Table B–15. Default Output Assignment

D to A	Function	Single Range	Dual Range	Auto Range
1	Voltage Output	Low SO_2	Low SO_2	High/Low SO_2
2	Voltage Output	Low SO_2	High SO_2	Range Status
3	Voltage Output	Not Assigned	Not Assigned	Not Assigned
4	Voltage Output	Not Assigned	Not Assigned	Not Assigned
5	Voltage Output	Not Assigned	Not Assigned	Not Assigned
6	Voltage Output	Not Assigned	Not Assigned	Not Assigned
7	Current Output	Low SO_2	Low SO_2	High/Low SO_2
8	Current Output	Low SO_2	High SO_2	Range Status
9	Current Output	Not Assigned	Not Assigned	Not Assigned
10	Current Output	Not Assigned	Not Assigned	Not Assigned
11	Current Output	Not Assigned	Not Assigned	Not Assigned
12	Current Output	Not Assigned	Not Assigned	Not Assigned

list var aout
list var dout
list var din

These commands report the list of index numbers, and the variables (associated with that index number) available for selection in the current mode (determined by single/dual/auto, gas mode) for analog output, digital output and digital inputs. The index number is used to insert the variable in a field location in a list using "set sp *field index*". The example that follows reports the list of analog output, index numbers, and variables.

```
Send:          list var aout
Receive:       list var aout
               index variable
               0 none
               1 so2
               11 intt
               12 rctt
               16 pres
               17 smplfl
               18 pmtv
               19 lmpv
               20 lmpi
               21 ain1
               22 ain2
               23 ain3
               24 ain4
               25 ain5
               26 ain6
               27 ain7
               28 ain8
```

relay stat

This command reports the current relay logic normally "open" or normally "closed," if all the relays are set to same state, that is all open or all closed. The example that follows shows that the status when all the relays logic is set to normally "open".

```
Send:          relay stat
Receive:       relay stat open
```

Note If individual relays have been assigned different logic then the response would be a 4-digit hexadecimal string with the least significant byte (LSB) being relay no 1. ▲

For example:

```
Receive:      relay stat 0x0001 (indicates relay no 1 is set to
              normally open logic, all others are normally closed)
Receive:      relay stat 0x0005 (indicates relay no 1 and 3 are
              set to be  normally open logic, all others are
              normally closed)
```

---

set relay open
set relay open *value*
set relay closed
set relay closed *value*
These commands set the relay logic to normally open or closed for relay number *value*, where *value* is the relay between 1 and 16. The example that follows sets the relay no 1 logic to normally open.

Note If the command is sent without an appended relay number then all the relays are assigned the set logic of normally open/closed. ▲

```
Send:         set relay open 1
Receive:      set relay open 1 ok
```

Record Layout Definition

The Erec, Lrec Srec layouts contain the following:

- A format specifier for parsing ASCII responses
- A format specifier for parsing binary responses,

In addition to these the Erec Layout contains

- A format specifier for producing the front-panel displays.

In operation, values are read in using either the ASCII or binary format specifiers and converted to uniform internal representations (32-bit floats or 32-bit integers). These values are converted into text for display on the screen using the format specifier for the front-panel display. Normally, the specifier used to parse a particular datum from the input stream will be strongly related to the specifier used to display it (e.g., all of the floating point inputs will be displayed with an 'f' output specifier, and all of the integer inputs will be displayed with a 'd' specifier).

Format Specifier for ASCII Responses

The first line of the Layout response is the scanf-like parameter list for parsing the fields from an ASCII ERec response. Parameters are separated by spaces and the line is terminated by a \n (the normal line separator character). Valid fields are:

```
%s  - parse a string
%d  - parse a decimal number
%ld - parse a long (32-bit) decimal number
%f  - parse a floating point number
%x  - parse a hexadecimal number
%lx - parse a long (32-bit) hex number
%*  - ignore the field
```

Note Signed versus unsigned for the integer values does not matter; it is handled automatically. ▲

Format Specifier for Binary Responses

The second line of the Layout response is the binary parameter list for parsing the fields from a binary response. Parameters MUST be separated by spaces, and the line is terminated by a '\n'. Valid fields are:

```
t - parse a time specifier (2 bytes)
D - parse a date specifier (3 bytes)
i - ignore one 8-bit character (1 byte)
e - parse a 24-bit floating point number (3 bytes: n/x)
E - parse a 24-bit floating point number (3 bytes: N/x)
f - parse a 32-bit floating point number (4 bytes)
c - parse an 8-bit   signed number (1 byte)
C - parse an 8-bit unsigned number (1 byte)
n - parse a 16-bit   signed number (2 bytes)
N - parse a 16-bit unsigned number (2 bytes)
m - parse a 24-bit   signed number (3 bytes)
M - parse a 24-bit unsigned number (3 bytes)
l - parse a 32-bit   signed number (4 bytes)
L - parse a 32-bit unsigned number (4 bytes)
```

There is an optional single digit *d* which may follow any of the numeric fields which indicates that after the field has been parsed out, the resulting value is to be divided by 10^*d*. Thus the 16-bit field 0xFFC6 would be interpreted with the format specifier 'n3' as the number -0.058.

Format Specifier for Front-Panel Layout

The subsequent lines in the ERec Layout response describe the appearance of the full panel. The full instrument panel as it appears on the screen has two columns of lines. Each line is composed of three major components: (1) a text field, (2) a value field, and (3) a button. None of these three components is required. The text field contains statically displayed text.

The value field displays values which are parsed out of the response to a DATA/ERec command. It also displays, though background changes, alarm status. The button, when pressed, triggers input from either a dialog box or a selection list. There are five kinds of buttons, B, I, L, T, and N.

Each line in the layout string corresponds to one line on the display. The layout string describes each of the three major fields as well as translation mechanisms and corresponding commands.

Text

The first field in the layout string is the text. It is delimited by a ':'. The string up to the first ':' will be read and inserted in the text field of the line.

Value String

This is followed by a possible string, enclosed in quotes. This is used to place a string into the value field.

Value Source

The value source, which is the item (or word) number in the DATA/ERec response, appears next. This is followed by an optional bitfield designator. The datum identified by the value source can be printed as a string 's', hexadecimal 'x', decimal 'd', or floating point 'f', or binary 'b' number. Typically, bitfield extractions are only done for decimal or hexadecimal numbers.

Floating-point numbers can be followed with an optional precision specifier which will be used as an argument to printf's %f format (e.g., a field of '4' would be translated into the printf command of '%.3f'). Alternately, the special character '*' can precede the precision specifier; this causes an indirection on the precision specifier (which now becomes a field number).

This is useful when formatting, for example, numbers which have varying precision depending on the mode of the instrument.

Binary numbers can also have an optional precision specifier which is used to determine how many bits to print. For example, the specifier 'b4' will print the lowest four bits of the parsed number.

There are serious restrictions on where an 's' field may appear: currently sources 1 and 2 must be 's', and no others may be 's'.

Alarm Information

The value source is followed by optional alarm information, indicated by a commercial at sign '@' with a source indicator and a starting bit indicator. All alarm information is presumed to be two bits long (low and high). The bitfield extraction is performed on the integer part of the source. Typical alarm information would appear as '@6.4'.

Translation Table

Then, there appears an optional translation table within braces '{}'. This is a string of words separated by spaces. An example translation table would be '{Code_0 Code_1 Code_2 Code_3}'. The value, once extracted is used

as a zero-based index into the translation table to determine the string to display.

Selection Table

Then there appears an optional selection table within parentheses '(...)'. This is a string of numbers separated by spaces '(0 1)'. The selection table lists the translation table entries which the user may select from when setting the parameter. This is not necessarily the same as the entries which may be displayed.

Button Designator

Then there appears an optional button designator. This will be one of 'B', 'I', 'L', 'T', or 'N'.

B- Indicates a button which pops up an input dialog prompting the user for a new value using the designated input format. The input format is specified from the 'B' through the subsequent semicolon.

I—Indicates a button which pops up a selection list with input translation. That is, the values read are translated before they are compared to the selection list options.

L—Indicates a button which pops up a selection list without any translation. The output value is number of the selected option.

T—Indicates a button which pops up a selection list with output translation. The number of the option selected is used as an index into the translation table to generate an output string.

N—Indicates a button which only sends the subsequent command to the instrument. No user-prompting happens.

Examples

Some examples ('\n' is the C syntax for an end-of-line character):

```
'Concentrations\n'
```

This is a single text-only line.

```
'\n'
```

This is a single blank line.

```
' NO:3s\n'
```

This is a line which appears slightly indented. The text field is 'NO', the value is taken from the third element of the data response, and interpreted as a string.

```
' NO:18sBd.ddd;set no coef %s\n'
```

This is a line which also appears slightly indented. The next field is also 'NO', but the value is taken from the eighteenth element of the data response, again interpreted as a string. A button appears on this line which, when pressed, pops up an input dialog which will state "Please enter a new value for NO using a d.ddd format." The string entered by the user is used to construct the output command. If the user enters, for example, '1.234', the constructed command will be 'set no coef 1.234'.

```
' NO:21f{Code_0 Code_1 Code_2 Code_3 Code_4 Code_5 Code_6 Code_7
Code_8 Code_9 Code_10 Code_11}Lset range no %d\n'
```

This is a line which appears slightly indented, the title is again 'NO', and the value the twenty-first element of the data response, interpreted as a floating-point number. There is a no-translation button which creates a selection list of twelve "Code nn" options. The number of the user selection is used to create the output command.

```
'Mode:6.12-13x{local remote service service}(0 1)Tset mode %s\n'
```

This is a line which has a title of 'Mode', and value taken from the sixth field of the data response. There is a bitfield extraction of bits 12 through 13 from the source (the value type is not important here because the value is being translated to an output string). Once the bits have been extracted, they are shifted down to the bit-zero position. Thus, the possible values of this example will be 0 through 3. The translation list shows the words which correspond to each input value, the zeroth value appearing first (0 -> local, 1 -> remote, etc.). The selection list shows that only the first two values, in this case, are to be shown to the user when the button is pressed. The 'T' button indicates full translation, input code to string, and user selection number to output string.

```
'\xC'
```

This is a line that starts a new column (the \xC or ^L),

```
' Comp:6.11x{off on}Tset temp comp %s\n'
```

This shows that the bitfield end (the second part of a bitfield specification) is optional. The bitfield will be one bit long, starting in this case at the eleventh bit.

```
'Background:7f*8Bd.ddd;set o3 bkg %s\n'
```

This shows the use of indirect precision specifiers for floating point displays. The background value is taken from the 7th element, and the precision specifier is taken from the 8th. If the asterisk were not present, it would indicate instead that 8 digits after the decimal point should be displayed.

Appendix C
MODBUS Protocol

This appendix provides a description of the MODBUS Protocol Interface and is supported both over RS-232/485 (RTU protocol) as well as TCP/IP over Ethernet.

The MODBUS Commands that are implemented are explained in detail in this document. The MODBUS protocol support for the iSeries enables the user to perform the functions of reading the various concentrations and other analog values or variables, read the status of the digital outputs of the analyzer, and to trigger or simulate the activation of a digital input to the instrument. This is achieved by using the supported MODBUS commands listed below.

For details of the Model 450*i* MODBUS Protocol specification, see the following topics:

- "Serial Communication Parameters" on page C-2.
- "TCP Communication Parameters" on page C-2.
- "Application Data Unit Definition" on page C-2.
- "Function Codes" on page C-3.
- "MODBUS Addresses Supported" on page C-8.

Additional information on the MODBUS protocol can be obtained at http://www.modbus.org. References are from MODBUS Application Protocol Specification V1.1a MODBUS-IDA June 4, 2004.

Serial Communication Parameters

The following are the communication parameters that are used to configure the serial port of the *i*Series to support MODBUS RTU protocol.

Number of Data bits : 7 or 8

Number of Stop bits : 1 or 2

Parity : None, Odd, or Even

Data rate : 1200 to 115200 Baud (9600 is default)

TCP Communication Parameters

iSeries Instruments support the MODBUS/TCP protocol. The register definition is the same as for the serial interface. Up to three simultaneous connections are supported over Ethernet.

TCP connection port for MODBUS: 502

Application Data Unit Definition

Here are the MODBUS ADU (Application Data Unit) formats over serial and TCP/IP:

Serial:	Slave Address	Function Code	Data	Error Check
TCP/IP:	MBAP Header	Function Code	Data	

Slave Address

The MODBUS slave address is a single byte in length. This is the same as the instrument ID used for C-Link commands and can be between 1 and 127 decimal (i.e. 0x01 hex to 0x7F hex). This address is only used for MODBUS RTU over serial connections.

Note Device ID '0' used for broadcast MODBUS commands, is not supported. Device IDs 128 through 247 (i.e. 0x80 hex to 0xF7 hex) are not supported because of limitations imposed by C-Link. ▲

MBAP Header

In MODBUS over TCP/IP, a MODBUS Application Protocol Header (MBAP) is used to identify the message. This header consists of the following components:

Transaction Identifier	2 Bytes	0x0000 to 0xFFFF (Passed back in response)
Protocol Identifier	2 Bytes	0x00 (MODBUS protocol)
Length	2 Bytes	0x0000 to 0xFFFF (Number of following bytes)
Unit Identifier	1 Byte	0x00 to 0xFF (Passed back in response)

A Slave address is not required in MODBUS over TCP/IP because the higher-level protocols include device addressing. The unit identifier is not used by the instrument.

Function Code

The function code is a single byte in length. The following function codes are supported by the instrument:

Read Coils	:	0x01
Read Inputs	:	0x02
Read Holding Registers	:	0x03
Read Input Registers	:	0x04
Force (Write) Single Coil	:	0x05
Read Exception Status	:	0x07

If a function code is received that is not in this list, and invalid function exception is returned.

Data

The data field varies depending on the function. For more description of these data fields, see "Function Codes" below.

Error Check

In MODBUS over Serial an error check is included in the message. This is not necessary in MODBUS over TCP/IP because the higher-level protocols ensure error-free transmission. The error check is a two-byte (16-bit) CRC value.

Function Codes

This section describes the various function codes that are supported by the Model 450*i*.

(0x01/0x02) Read Coils / Read Inputs

Read Coils/Inputs reads the status of the digital outputs (relays) in the instrument. Issuing either of these function codes will generate the same response.

These requests specify the starting address, i.e. the address of the first output specified, and the number of outputs. The outputs are addressed starting at zero. Therefore, outputs numbered 1–16 are addressed as 0–15.

The outputs in the response message are packed as one per bit of the data field. Status is indicated as 1 = Active (on) and 0 = Inactive (off). The LSB of the first data byte contains the output addressed in the query. The other outputs follow toward the high order end of this byte, and from low order to high order in subsequent bytes. If the returned output quantity is not a multiple of eight, the remaining bits in the final data byte will be padded

with zeros (toward the high order end of the byte). The Byte Count field specifies the quantity of complete bytes of data.

Note The values reported may not reflect the state of the actual relays in the instrument, as the user may program these outputs for either active closed or open. ▲

Request

Function code	1 Byte	0x01 or 0x02
Starting Address	2 Bytes	0x0000 to maximum allowed by instrument
Quantity of outputs	2 Bytes	1 to maximum allowed by instrument
Unit Identifier	1 Byte	0x00 to 0xFF (Passed back in response)

Response

Function code	1 Byte	0x01 or 0x02
Byte count	1 Byte	N*
Output Status	n Byte	N = N or N+1

*N = Quantity of Outputs / 8, if the remainder not equal to zero, then N=N+1

Error Response

Function code	1 Byte	0x01 or 0x02
Exception code	1 Byte	01=Illegal Function, 02=Illegal Address, 03=Illegal Data, 04=Slave Device Failure

Here is an example of a request and response to read outputs 2–15:

Request

Field Name	*(Hex)*
Function	0x01
Starting Address Hi	0x00
Starting Address Lo	0x02
Quantity of Outputs Hi	0x00
Quantity of Outputs Lo	0x0D

Response

Field Name	*(Hex)*
Function	0x01
Byte Count	0x03
Output Status 2–10	0xCD
Output Status 11–15	0x0A

The status of outputs 2–10 is shown as the byte value 0xCD, or binary 1100 1101. Output 10 is the MSB of this byte, and output 2 is the LSB. By convention, bits within a byte are shown with the MSB to the left, and the LSB to the right. Thus the outputs in the first byte are '10 through 2', from left to right. In the last data byte, the status of outputs 15-11 is shown as the byte value 0x0A, or binary 0000 1010. Output 15 is in the fifth bit position from the left, and output 11 is the LSB of this byte. The four remaining high order bits are zero filled.

(0x03/0x04) Read Holding Registers / Read Input Registers

Read holding/input registers reads the measurement data from the instrument. Issuing either of these function codes will generate the same response. These functions read the contents of one or more contiguous registers.

These registers are 16 bits each and are organized as shown below. All of the values are reported as 32-bit IEEE standard 754 floating point format. This uses 2 sequential registers, least significant 16 bits first.

The request specifies the starting register address and the number of registers. Registers are addressed starting at zero. Therefore registers numbered 1–16 are addressed as 0–15. The register data in the response message are packed as two bytes per register, with the binary contents right justified within each byte. For each register, the first byte contains the high order bits and the second contains the low order bits.

The status of outputs 2–10 is shown as the byte value 0xCD, or binary 1100 1101. Output 10 is the MSB of this byte, and output 2 is the LSB. By convention, bits within a byte are shown with the MSB to the left, and the LSB to the right. Thus, the outputs in the first byte are '10 through 2', from left to right. In the last data byte, the status of outputs 15-11 is shown as the byte value 0x0A, or binary 0000 1010. Output 15 is in the fifth bit position from the left, and output 11 is the LSB of this byte. The four remaining high order bits are zero filled.

The request specifies the starting register address and the number of registers. Registers are addressed starting at zero. Therefore, registers numbered 1–16 are addressed as 0–15. The register data in the response message are packed as two bytes per register, with the binary contents right

justified within each byte. For each register, the first byte contains the high order bits and the second contains the low order bits.

Request

Function code	1 Byte	0x03 or 0x04
Starting Address	2 Bytes	0x0000 to maximum allowed by instrument
Quantity of Registers	2 Bytes	1 to maximum allowed by instrument

Response

Function code	1 Byte	0x03 or 0x04
Byte count	1 Byte	2 x N*
Register value	N* x 2 Bytes	N = N or N+1

*N = Quantity of Registers

Error Response

Function code	1 Byte	Function code + 0x80
Exception code	1 Byte	01=Illegal Function, 02=Illegal Address, 03=Illegal Data, 04=Slave Device Failure

Here is an example of a request and response to read registers 10–13:

Request

Field Name	*(Hex)*
Function	0x03
Starting Address Hi	0x00
Starting Address Lo	0x09
No. of Registers Hi	0x00
No. of Registers Lo	0x04

Response

Field Name	*(Hex)*
Function	0x03
Byte Count	0x06
Register value Hi (10)	0x02
Register value Lo (10)	0x2B

Register value Hi (11)	0x00
Register value Lo (11)	0x00
Register value Hi (12)	0x00
Register value Lo (12)	0x64
Register value Hi (13)	0x00
Register value Lo (13)	0x64

The contents of register 10 are shown as the two byte values of 0x02 0x2B. Then contents of registers 11–13 are 0x00 0x00, 0x00 0x64 and 0x00 0x64 respectively.

(0x05) Force (Write) Single Coil

The force (write) single coil function simulates the activation of the digital inputs in the instrument, which triggers the respective action.

This function code is used to set a single action to either ON or OFF. The request specifies the address of the action to be forced. Actions are addressed starting at zero. Therefore, action number 1 is addressed as 0. The requested ON/OFF state is specified by a constant in the request data field. A value of 0xFF00 requests the action to be ON. A value of 0x0000 requests it to be OFF. All other values are illegal and will not affect the output. The normal response is an echo of the request, returned after the state has been written.

Note This function will not work if the instrument is in service mode. ▲

Request

Function code	1 Byte	0x05
Starting Address	2 Bytes	0x0000 to maximum allowed by instrument
Output Value	2 Bytes	0x0000 or 0xFF00

Response

Function code	1 Byte	0x05
Starting Address	2 Bytes	0x0000 to maximum allowed by instrument
Output Value	2 Bytes	0x0000 or 0xFF00

Error Response

Function code	1 Byte	Function code + 0x80

Exception code	1 Byte	01=Illegal Function, 02=Illegal Address, 03=Illegal Data, 04=Slave Device Failure

Here is an example of a request to write Coil 5 ON:

Request

Field Name	*(Hex)*
Function	05
Output Address Hi	00
Output Address Lo	05
Output Value Hi	FF
Output Value Lo	00

Response

Field Name	*(Hex)*
Function	05
Output Address Hi	00
Output Address Lo	05
Output Value Hi	FF
Output Value Lo	00

MODBUS Addresses Supported

Tables C1 through C3 list the MODBUS addresses supported for the Model 450*i*.

IMPORTANT NOTE The addresses in the following tables are Protocol Data Unit (PDU) addresses. Verify the coil number on your MODBUS master to ensure that it matches the coil number on the instrument. ▲

Note Coil status 1 indicates active state. ▲

Table C–1. Read Coils for 450i

Coil Number	Status
0	Invalid
1	AUTORANGE
2	LOCAL/REMOTE
3	SERVICE

Coil Number	Status
4	UNITS (0 = ppm or ppb; 1 = mg/m^3 or $\mu g/m^3$)
5	ZERO MODE (zero/span or dual span option)
6	SPAN MODE (zero/span option)
7	SAMPLE MODE (zero/span or dual span option)
8	SO2 MODE
9	CS MODE
10	GENERAL ALARM
11	SO2 CONC MAX ALARM
12	SO2 CONC MIN ALARM
13	H2S CONC MAX ALARM
14	H2S CONC MIN ALARM
15	CS CONC MAX ALARM
16	CS CONC MIN ALARM
17	INTERNAL TEMP ALARM
18	CHAMBER TEMP ALARM
19	CONVERTER TEMP ALARM
20	PERM GAS TEMP ALARM
21	PRESSURE ALARM
22	SAMPLE FLOW ALARM
23	FLASH REF ALARM
24	FLASH VOLTAGE ALARM
25	MOTHERBOARD STATUS ALARM
26	MEASUREMENT INTERFACE BOARD STATUS ALARM
27	I/O EXP BOARD STATUS ALARM
28	CONC ALARM
29	PURGE MODE (zero/span or dual span option)
30	ZERO CHK/CAL ALARM (zero/span or dual span option)
31	SPAN CHK/CAL ALARM (zero/span or dual span option)
32	SPAN 1 MODE (dual span option)
33	SPAN 2 MODE (dual span option)

IMPORTANT NOTE The addresses in the following tables are Protocol Data Unit (PDU) addresses. Verify the register number on your MODBUS master to ensure that it matches the register number on the instrument. ▲

Note For additional information on how to read registers and interpret the data, refer to the "(0x03/0x04) Read Holding Registers / Read Input Registers" section in this appendix. ▲

Table C–2. Read Registers for 450i

Register Number	Variable
0	Invalid
1&2	SO2 CONC
3&4	H2S CONC
5&6	CS CONC
7&8	LOW SO2 CONC (Dual/Auto Range mode)
9&10	LOW H2S CONC (Dual/Auto Range mode)
11&12	LOW CS CONC (Dual/Auto Range mode)
13&14	HIGH SO2 CONC (Dual/Auto Range mode)
15&16	HIGH H2S CONC (Dual/Auto Range mode)
17&18	HIGH CS CONC (Dual/Auto Range mode)
19&20	RANGE (Dual/Auto Range mode)
21&22	INTERNAL TEMP
23&24	CHAMBER TEMP
25&26	H2S CONVERTER TEMP
27&28	PERM OVEN GAS TEMPERATURE
29&30	PERM OVEN HEATER TEMPERATURE
31&32	CHAMBER PRESSURE
33&34	SAMPLE FLOW
35&36	PMT VOLTS
37&38	FLASH VOLTS
39&40	FLASH REF
41&42	ANALOG IN 1 (I/O Expansion Board installed)
43&44	ANALOG IN 2 (I/O Expansion Board installed)
45&46	ANALOG IN 3 (I/O Expansion Board installed)

Register Number	Variable
47&48	ANALOG IN 4 (I/O Expansion Board installed)
49&50	ANALOG IN 5 (I/O Expansion Board installed)
51&52	ANALOG IN 6 (I/O Expansion Board installed)
53&54	ANALOG IN 7 (I/O Expansion Board installed)
55&56	ANALOG IN 8 (I/O Expansion Board installed)
40057&40058	NOT USED
40059&40060	NOT USED
40061&40062	NOT USED
40063&40064	EXTERNAL ALARMS
40065&40066	O2 %
40067&40068	O2 SENS TEMP
40069&40070	H2S SCRUB
40071&40072	LO H2S SCRUB
40073&40074	HI H2S SCRUB
40075&40076	SO2 COR
40077&40078	LO SO2 COR
40079&40080	HI SO2 COR
40081&40082	SO2 BKG
40083&40084	LO SO2 COEF
40085&40086	HI SO2 COEF

IMPORTANT NOTE The addresses in the following tables are Protocol Data Unit (PDU) addresses. Verify the coil number on your MODBUS master to ensure that it matches the coil number on the instrument. ▲

Note Writing 1 to the coil number shown in the following table will initiate the "action triggered" listed in the table. This state must be held for at least 1 second to ensure the instrument detects the change and triggers the appropriate action. ▲

Note The coils within each coil group in the following table are mutually exclusive and will not be triggered if there is a conflict. Before you assert (1) one coil in a group, make sure the other coils in the group are de-asserted (0). ▲

Table C–3. Write Coils for 450*i*

Coil Number	Action Triggered
100	Invalid
101	ZERO MODE (zero/span or dual span option)
102	SPAN MODE (zero/span option)
103	SO2 MODE
104	CS MODE
105	SET BACKGROUND
106	CAL TO LOW SPAN
107	AOUTS TO ZERO
108	AOUTS TO FS
109	CAL TO HIGH SPAN
110	SPAN 1 MODE (dual span option)
111	SPAN 2 MODE (dual span option)

Appendix D
Geysitech (Bayern-Hessen) Protocol

This appendix provides a description of the Geysitech (Bayern-Hessen or BH) Protocol Interface and is supported both over RS-232/485 as well as TCP/IP over Ethernet.

The Geysitech Commands that are implemented are explained in detail in this document. The Geysitech protocol support for the *i*Series enables the user to perform the functions of reading the various concentrations and to trigger the instrument to be in sample/zero/span mode if valid for that instrument.

Serial Communication Parameters

The following are the communication parameters that are used to configure the serial port of the *i*Series to support Geysitech protocol.

Number of Data bits	: 7 or 8
Number of Stop bits	: 1 or 2
Parity	: None, Odd, or Even
Data rate	: 1200 to 115200 Baud (9600 is default)

TCP Communication Parameters

*i*Series Instruments support the Geysitech/TCP protocol over TCP/IP. The register definition is the same as for the serial interface. Up to three simultaneous connections are supported over Ethernet.

TCP connection port for Geysitech: 9882

Instrument Address

The Geysitech instrument address has a value between 0 and 127 and is represented by 3 digit ASCII number with leading zeros or leading spaces if required (e.g. Instrument address of 1 is represented as 001 or <SP><SP>1)

The instrument Address is the same as the Instrument ID used for C-Link and MODBUS commands. This can be set via the front panel.

The Instrument Address is represented by <address> in the examples throughout this document.

Note Device IDs 128 through 247 are not supported because of limitations imposed by the C-Link protocol. ▲

Abbreviations Used

The following is a list of abbreviations used in this document:

<CR> is abbreviation for Carriage Return (ASCII code 0x0D)

<STX> is abbreviation for Start of Text (ASCII code 0x02)

<ETX> is abbreviation for End of Text (ASCII code 0x03)

<SP> is abbreviation for space (ASCII code 0x20)

Basic Command Structure

The following is the basic structure of a Geysitech command:

<STX>Command text<ETX><BCC>

OR

<STX>Command text<CR>

Each Command is framed by control characters, <STX> at the start and terminated with either <ETX> or <CR>.

If a command is terminated with <ETX> then additional two characters <BCC> is attached after <ETX>, this is the block checksum.

Block Check Characters <BCC> may be added to the command to prevent processing invalid commands.

Block Checksum Characters <BCC>

The block checksum characters are calculated beginning with a seed value of 00000000, binary (0x00), and bitwise exclusive ORing with each of the characters of the command string (or response) including the framing characters <STX> and <ETX>. The checksum works as an error check. The command terminator determines the presence or absence of <BCC>.

If a command is terminated by <ETX> then the next two characters are the checksum, if the command is terminated with <CR> no checksum is attached

The block checksum is represented by two characters, which represent a 2 digit hex number (1byte). (e.g. 1 byte 0xAB hex checksum will be represented by the two characters ‘A’ & ’B’)

The checksum is referred to as <BCC> throughout this document.

Geysitech Commands

The following commands are supported by the Geysitech protocol:

- Instrument Control Command (ST)
- Data Sampling/Data Query Command (DA)

Instrument Control Command (ST)

There are three control commands supported by the Geysitech protocol.

This <control command> is a single letter, which triggers an action in the instrument. These commands are active only when service mode is inactive and the zero/span option is present.

Command 'N' switches the instrument gas mode to Zero mode.

Command 'K' switches the instrument gas mode to Span mode.

Command 'M' switches the instrument gas mode to Sample mode.

The following are the different acceptable formats of the ST command:

<STX>ST<address><control command><ETX><BCC>

OR

<STX>ST<address><control command><CR>

OR

<STX>ST<address><SP><control command><CR>

OR

<STX>ST<address><SP><control command><ETX><BCC>

The <address> is optional, which means it can be left out completely. The <address> if present must match the Instrument Address. Additional space can be present after the <address>.

If the received command does not satisfy the above formats or if the <address> does not match the Instrument Address the command is ignored.

This is a sample command to switch the instrument to zero mode, instrument id 5:

```
<STX>ST005<SP>N<CR>
```

Data Sampling/Data Query Command (DA)

This command DA initiates a data transfer from the instrument. The instrument responds with measurement data, which depends on the range mode and is listed in "Measurements Reported in Response to DA Command" below.

The command structure for a data query command is as follows:

<STX>DA<address><ETX><BCC>

The <address> is optional, which means it can be left out completely. The <address> if present must match the Instrument Address. Additional space can be present after the <address>.

If the <address> is left out then no space is allowed in the query string.

A command with no address is also a valid command.

The following are the different acceptable formats of the DA command with Instrument Address 5:

<STX>DA<CR>

<STX>DA005<CR>

<STX>DA<SP><SP>5<ETX><BCC>

<STX>DA<ETX><BCC>

The data query string is valid and will be answered with data transmission only if the command starts with <STX> which is followed by the characters DA, and the <address> (if present) matches the Instrument Address, and the command is terminated with either <CR> with no checksum or <ETX> followed by the correct checksum <BCC>.

Sample Data Reply String in response to Data Query Command (DA):

In response to a valid data query command (DA) the instrument responds in the following format:

<STX>MD02<SP><address><SP><measured value1><SP><status><SP><SFKT><SP><address+1><SP><measured value2><SP ><status><SP><SFKT><ETX><BCC>

The response uses the same command terminators as used by the received command i.e. if the received command was terminated with a <CR> the response is terminated with <CR> and if the command was terminated with a <ETX><BCC> the response is terminated with<ETX> and the computed checksum <BCC>.

The 02 after the MD indicates, that two measurements are present in the reply string, (a 03 for three measurements and so on, this will also determine the length of the reply string).

<address> is the Instrument Address. Each subsequent measurement attached to the response will have the <address + X> where X keeps incrementing by 1 for each measurement included.

<measured value> is the concentration value in currently selected gas units represented as exponential representation with 4 characters mantissa and 2 characters exponent, each with sign.

Mantissa: sign and 4 digits. The decimal point is assumed to be after the first digit and is not transmitted.

Exponent: sign and 2 digits.

Example:

-5384000.0 is represented as -5384+06

+0.04567 is represented as +4567-02

<status>: is formed by < operating status > and < error status > and separated by a space i.e.

<operating status><SP><error status>

Each of the two (<operating status> and <error status>) are formed by two characters each representing a 2 digit hex number which is one byte (8 Bits) operation status and one byte (8 Bits) error status.

These two bytes contain the information about the main operating conditions of the instrument at that instant. For details on how to interpret the status bytes refer to **Table D–1** and **Table D–2** below.

<SFKT>: is the space provided for future use for special function, it currently contains a string of ten 0's i.e. <0000000000>.

Example:

Geysitech Protocol with transmission of three concentrations (Instrument ID is 1, Operation Status is 03, Error Status is 04):

Data Query String: `<STX>DA<CR>`

Reply String:

```
<STX>MD03<SP>001<SP>+2578+01<SP>03 <SP>04<SP>0000000000 <SP>002 <SP>
                ↑          ↑                                      ↑
              Address   First Concentration(E-format)=25.78      Address+1

+5681+00<SP>03<SP>04<SP>0000000000<SP>003<SP>+1175+01<SP>03<SP>04<SP
  ↑                                        ↑         ↑
 Second Concentration = 5.681            Address+2   Third Concentration=11.75

0000000000<SP><CR>
```

The attached concentrations are in the selected gas units. The measurements that are attached to the response if not valid in a particular mode then a value of 0.0 will be reported.

Measurements Reported in Response to DA Command

The following measurements reported in response to DA command are for the Model 450*i*.

Single Range Mode

The three measurement reported in single range mode include:

- SO_2
- H_2S
- CS

Dual/Auto Range Mode

The six measurements reported in dual or auto range modes include:

- low SO_2, low H_2S, low CS
- high SO_2, high H_2S, high CS

Operating and Error Status

See **Table D–1** for operating status and **Table D–2** for error status for the Model 450*i*.

Table D–1. Operating Status for Model 450*i*

	D7	D6	D5	D4		D3	D2	D1	D0
→ Bit	**8**	**7**	**6**	**5**		**4**	**3**	**2**	**1**
→ Hex-value	80	40	20	10		08	04	02	01
	MSB					LSB			
Operating status:									
Service Mode (On)	0	0	0	0		0	0	0	1
Maintenance (Local)	0	0	0	0		0	0	1	0
Zero gas (On)	0	0	0	0		0	1	0	0
Span gas (On)	0	0	0	0		1	0	0	0
Gas Unit Indication (ppb OR ppm)	0	0	0	1		0	0	0	0
Test LED (On)	0	0	1	0		0	0	0	0
Flash Lamp (Off)	0	1	0	0		0	0	0	0
Not used	1	0	0	0		0	0	0	0

Table D–2. Error Status for Model 450*i*

	D7	D6	D5	D4		D3	D2	D1	D0
→ Bit	**8**	**7**	**6**	**5**		**4**	**3**	**2**	**1**
→ Hex-value	80	40	20	10		08	04	02	01
	MSB					LSB			
Error status:									
Internal Temperature Alarm	0	0	0	0		0	0	0	1
Reaction Chamber Temperature Alarm	0	0	0	0		0	0	1	0
Lamp Intensity Alarm	0	0	0	0		0	1	0	0
Lamp Voltage Alarm	0	0	0	0		1	0	0	0
Pressure Alarm	0	0	0	1		0	0	0	0
Sample Flow Alarm	0	0	1	0		0	0	0	0
Permeation Gas Temperature Alarm	0	1	0	0		0	0	0	0
H_2S Converter	1	0	0	0		0	0	0	0